WEB FOLDING MACHINE AND METHOD

Filed Aug. 26, 1953 2 Sheets-Sheet 1

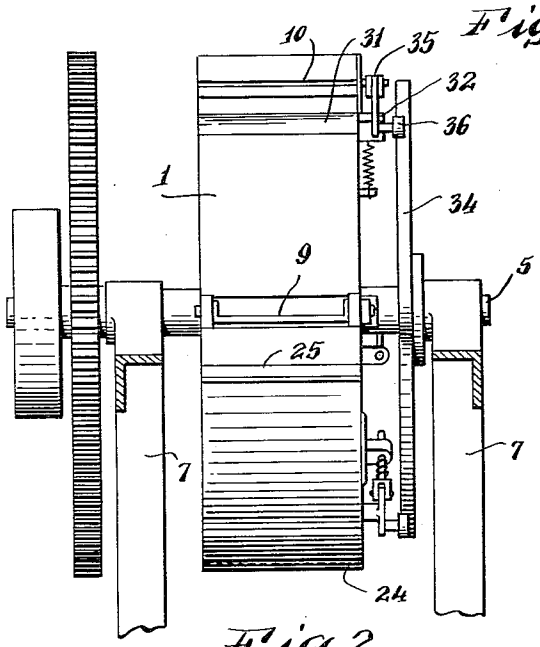

Fig. 2.

Fig. 3.

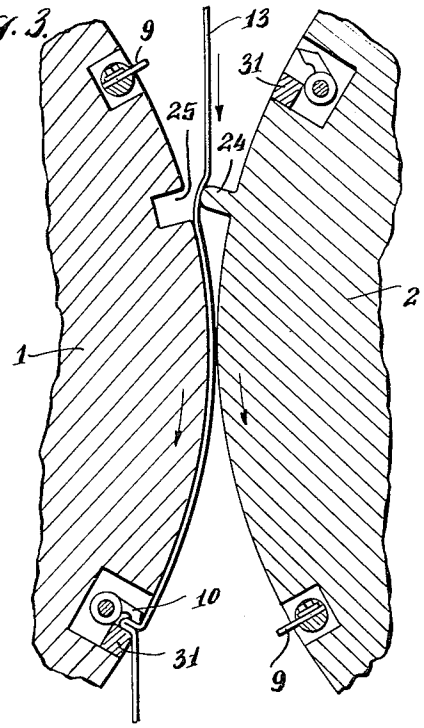

Fig. 4.

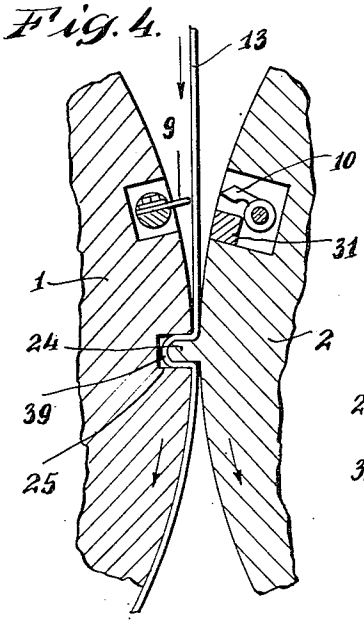

Fig. 5.

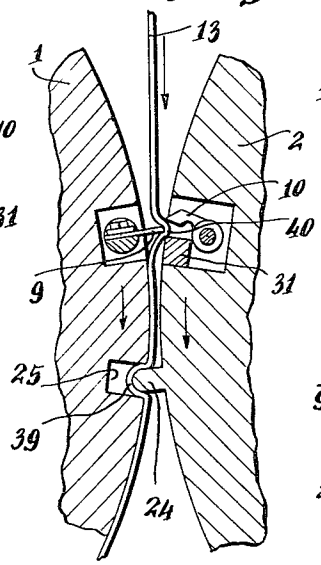

Fig. 6.

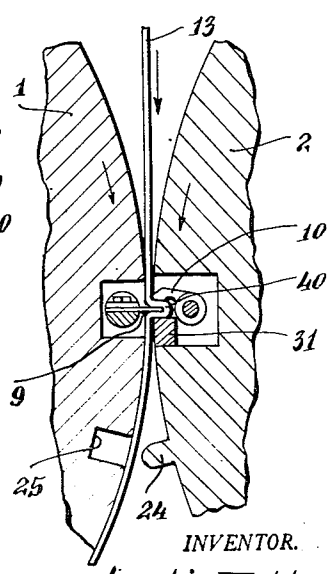

INVENTOR.
Leslie T. Hand
BY
Norman K. Holland
ATTORNEY

Oct. 2, 1956 L. T. HAND 2,765,164

WEB FOLDING MACHINE AND METHOD

Filed Aug. 26, 1953 2 Sheets-Sheet 2

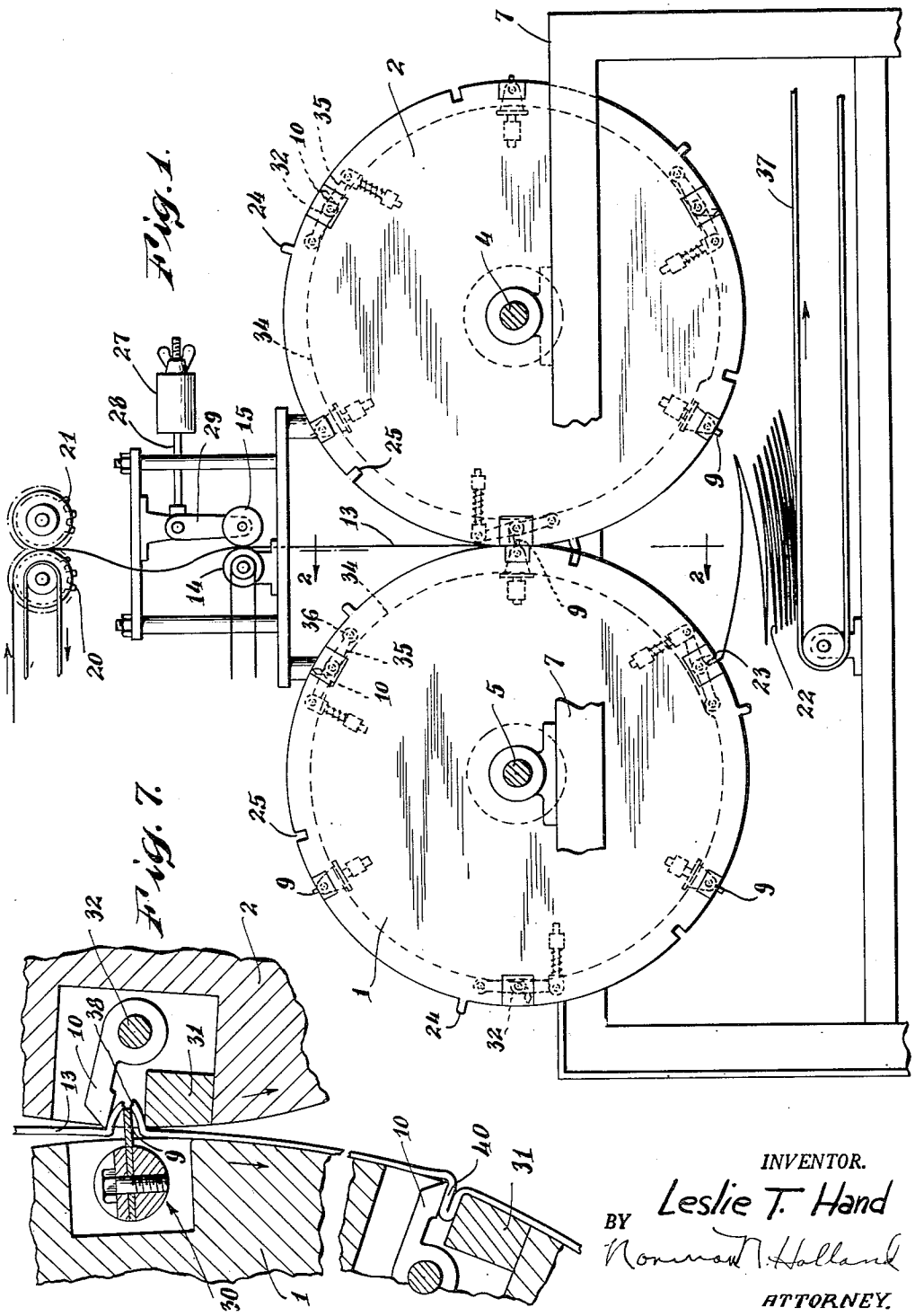

INVENTOR.
Leslie T. Hand
BY
Norman N. Holland
ATTORNEY.

United States Patent Office

2,765,164

Patented Oct. 2, 1956

1

2,765,164

WEB FOLDING MACHINE AND METHOD

Leslie T. Hand, Greenwich, Conn., assignor to Morsegraph Inc., New York, N. Y., a corporation of New York

Application August 26, 1953, Serial No. 376,700

10 Claims. (Cl. 270—73)

The present invention relates generally to a machine and method for folding long strips of paper called webs into a zig-zag shape and for stacking the folded paper, and relates more particularly to a machine and method of folding which has automatic slack-producing mechanism permitting it to fold paper strips at very high speeds.

The device and method of the present invention are improvements upon the operation of folding machines and methods such as the machine and method disclosed in my prior United States Patent No. 2,531,213. The present invention improves the former machine by allowing it to run at much greater speeds and to provide a superior product. These improvements are made by the provision of a slack-producing arrangement which provides the correct amount of slack in the web adjacent the folding jaws to prevent either tearing due to too little slack in the web or inaccurate size folds caused by too much slack.

An object of the present invention is to provide a new and improved device and method for forming folds in webs of paper.

Another object of the invention is to provide an improved device and method for folding paper webs accurately at high speeds.

Another object of the invention is to provide a new and improved means and method for providing slack portions in a web of paper in advance of the folding blade.

Another object of the invention is to provide new and improved means and method to provide for and to control the amount of slack in the web both in advance of and behind the folder blades.

Another object of the invention is to provide improved means and method adapted to minimize or prevent tearing or mutilation of the web during the folding thereof.

Still another object of the invention is to provide an improved paper-folding machine of relatively simple construction and operation.

Other and further objects of the invention will be obvious upon an understanding of the illustrative embodiment about to be described, or will be indicated in the appended claims, and various advantages not referred to herein will occur to one skilled in the art upon employment of the invention in practice.

A preferred embodiment of the invention has been chosen for purposes of illustration and description and is shown in the accompanying drawings, forming a part of the specification, wherein:

Fig. 1 is a side elevational view partially cut away showing a preferred embodiment of the present machine;

Fig. 2 is a vertical sectional view taken along line 2—2 of Fig. 1;

Fig. 3 is an enlarged fragmentary view taken at the point of tangency of rollers 1 and 2 and illustrating the positions of the slack-producing bar and slot at the beginning of the slack-producing operation;

2

Fig. 4 is a fragmentary view generally similar to Fig. 3, but showing the relationship of the slack bar and slot after the rollers have rotated a fraction of a turn from the position of Fig. 3;

Fig. 5 is a fragmentary view generally similar to Fig. 4, but showing the relationship of the slack bar and slot after the rollers have rotated an additional fraction of a turn from the position of Fig. 4 and after the jaw has begun to fold the web;

Fig. 6 is a fragmentary view generally similar to Fig. 5, but showing the relationship of the slack bar and slot at the end of the folding operation;

Fig. 7 is an enlarged fragmentary view of the folding jaw and blade showing the tearing action which tends to occur when slack is not provided as in the present invention.

Referring more particularly to Figs. 1 and 2 of the drawing, there is shown a paper-folding machine comprising a pair of rollers or drums 1 and 2 rotatably mounted on axles 4 and 5 on frame 7. The rollers are geared together and driven by a suitable drive such as is done in the above referred to patent. The rollers turn in opposite directions so that alternately-arranged folder blades 9 and clamping jaws 10 on the periphery of the rollers meet at the point of tangency of the rollers. At this point the blade 9 and jaw 10 cooperate to fold the web 13 over the blade 9 (Fig. 6).

The web of paper 13 is unwound from a large roll (not shown) and is moved by feed rollers 20 and 21 through drag rollers 14 and 15 and between rollers 1 and 2. The rollers 1 and 2 are spaced far enough apart at the point of tangency so that the web 13 will slide freely between the rollers.

The fold formed at the point of tangency of the rollers is held by clamping jaw 10 while blade 9 is withdrawn by the further revolution of the drums. The fold remains in the closed jaws 10 and 31 and is carried from the point of tangency to a release location 23. Alternate folds being on opposite rollers are carried in opposite directions. The result is a vertical stack 22 of zig-zag folded paper which is removed by any suitable means such as conveyor 37.

The construction and operation of the folder blades 9 and clamping jaws 10 may be as disclosed in detail in my previously referred to patent. Described generally this portion consists (Fig. 7) of the blade 9 mounted in a support member 30 which is pivotally mounted to rotate axially on the roller to allow the blade 9 to accommodate itself to the alignment of jaw 10 as will be discussed below. The jaw portion consists of a movable jaw 10 and a fixed jaw 31. The movable jaw is fastened to a shaft 32 which is rotated in accordance with the surface of cam 34 through the intermediation of cam follower lever 35 and cam follower 36 (Fig. 1). The surface of cam 34 is cut to begin to close jaw 10 as the rollers reach a position such as that shown in Fig. 5. As the rollers rotate further, the cam 34 continues to close the jaw 10 until the jaw 10 reaches the point of tangency of the rollers shown in Figs. 1 and 6 when the jaw 10 has closed tightly over blade 9 and has sharply creased the web 13.

As the rollers 1 and 2 continue to turn, blade 9 will be drawn from its position between jaws 10 and 31 and will also rotate with the pivotally-mounted support member 30 to accommodate itself to the changing alignments of the blade 9 and jaws 10 and 31. After the blade 9 has been completely withdrawn from between jaws 10 and 31 due to the rotation of the rollers, jaws 10 and 31 will continue to grip the web 13 until it reaches the re-

lease point **23** when cam **34** will cause jaw **10** to open and to drop the creased web onto pile **22**.

The folding of the web **13** over blade **9** is shown in Fig. 7 when no slack-producing device such as is the subject of the present invention is used. As the lower fold **40** shown in Fig. 7 carries the web toward the release position, the web is drawn against the surface of the roller **1**. As upper set of jaws **10** and **31** fold web **13** over blade **9**, the web will tend to tear at **38** along the edge of blade **9** since no slack is available to be drawn between the preceding lower fold **40** and the upper jaw **31**. In order for the jaw **10** to close upon jaw **31** without tearing the web, slack must be provided between upper jaw **31** and the lower fold **40**. Similarly slack must also be provided in the web above the folder blade **9**.

The device and method of the present invention prevents the above tearing by providing the proper amount of slack in the web on both sides of the folder blade **9** since the web **13** does not slide over the top of blade **9** once blade **9** has come into contact with the web **13**. This permits the jaw **10** to close upon jaw **31** folding the web over blade **9** without tearing the paper, and, as a result, the paper-folding machine may be run at much higher speeds than previous ones.

In describing the action of the slack-producing parts, the portion of the web ahead of the folder blade **9** with reference to the direction of rotation of the rollers **1** and **2** will be described as in advance of the folder blade **9**, and the portion of the web behind the folder blade with reference to the direction of rotation of the rollers **1** and **2** will be described as behind the folder blade.

Figs. 3 through 6 show four successive positions of the rollers **1** and **2** and the operation of the slack-producing means which produces slack in advance of folder blade **9**. This slack-producing means consists of the slack bars **24** mounted as shown in Fig. 1 around the surface of rollers **1** and **2** and the cooperating slots **25** similarly positioned about the surface of rollers **1** and **2**.

Bars **24** may be made of any suitable material such as iron, or steel, or other material having strength and hardness. The bars **24** are fastened to the surface of rollers **1** and **2** by any suitable fastening means such as bolts, brackets, or welding.

Slots **25** are formed in the surface of rollers **1** and **2**. As will be further described below, the shape of the bars **24** and slots **25** is dependent upon the amount of slack required.

Fig. 3 shows the lower jaws **10** and **31** carrying a completed fold of web **13** towards the release point **23** for roller **1** (Fig. 1). Slack bar **24** has just made contact with the web and has begun to push it into slot **25**. Jaw **10** at the top of Fig. 3 is seen in its open position and it and blade **9** have not been moved close enough to the point of tangency of the rollers to have contacted the web **13**.

Fig. 4 shows the same rollers after they have rotated an additional fraction of a turn in the indicated direction. The bar **24** and the slot **25** are now located at the point of tangency of rollers **1** and **2** and bar **24** has now reached its point of maximum penetration into slot **25**. The rounded shape of bar **24** and slot **25** prevents any permanent creasing or marking of web **13** near loop **39**.

Folder blade **9** has just made contact with the web **13** and is now ready to force web **13** to the right and into jaws **10** and **31**. The additional web that is required to form loop **39** around bar **24** is available for the slack required to form the lower side of loop **40** around folder blade **9** as seen in Fig. 5.

In Fig. 5 the rollers have rotated still further in the indicated direction and folder blade **9** has begun to push the web into the jaws **10** and **31**. At the same time movable jaw **10** is being closed toward fixed jaw **31** by the action of cam **34** (Fig. 1) as was described above. Bar **24** has been withdrawn a short distance from slot **25**, allowing the loop **39** to be shortened. The web that is made available by the shortening of loop **39** is used to provide web for the loop **40** being formed over blade **9** by jaws **10** and **31**.

In Fig. 6 further rotation of rollers **1** and **2** has caused bar **24** to withdraw completely from slot **25**. Jaw **10** has been moved tightly down against the web, completing loop **40** over folder blade **9**. The formation of loop **40** has used all the web available from loop **39** in slot **25**. Bar **24** and slot **25** are proportioned so that there is just the right amount of slack web available from the removal of loop **39** to provide the necessary web to form the portion of loop **40** in advance of folder blade **9**.

In order to keep a predetermined and constant spacing between folds, the lower jaw **10** (Fig. 3) will not release its fold until the upper jaw **10** has completed its folding operation as in Fig. 6.

As above described, the action of bar **24** and slot **25** provides the necessary slack to form the portion of loop **40** (Figs. 5 and 6) in advance of folder blade **9**. Slack is also necessary to form the portion of loop **40** behind folder blade **9** since at high speeds web **13** will not slide over the top of folder blade **9** from one side to the other.

The device for supplying the slack behind folder blade **9** is shown in Fig. 1. Drag rollers **14** and **15** are run at a slower surface speed than feed rollers **20** and **21** to keep a loop of slack in web **13** between rollers **20** and **21** and drag rollers **14** and **15**. The force of the drag applied by drag roller **15** is adjusted by moving weight **27** on arm **28** which is fixed to hinged arm **29** mounting roller **15**. This drag force is adjusted so that web **13** will be drawn easily behind folder blade **9** by jaw **10** in forming loop **40** and at the same time is adjusted so that it will provide enough drag to keep web **13** taut between drag rollers **14** and **15** and folder blade **9**.

Slack is thus provided in advance of the folder blade **9** by the action of bar **24** and slot **25** and is provided behind folder blade **9** by the action of the feed rollers **21** and **22** and the drag rollers **14** and **15**.

It will thus be seen that the present invention provides a new and improved method and means to provide slack in a folding machine. Once the bars **24** and the slots **25** have been proportioned for the creation of the desired amount of slack, no further adjustment will be required since this slack-producing device has no moving parts. By providing the slack both in advance of the folder blade as well as behind it, the action of the folding jaws is improved so that the web is easily folded by the jaws over the folder blade. Since the folding action with the slack avoids tearing, the machine speeds may be substantially increased without mutilation of the web.

The method and device for producing the slack in advance of the folder blade also provides an exactly determined amount of slack. This allows the distance between folds in the folded web to be set to an exact length and to be kept constant at this length.

The invention is of relatively simple and inexpensive construction and may be added to existing folding machines as well as being used in the manufacture of new folding machines.

As various changes may be made in the form, construction and arrangement of the parts herein without departing from the spirit and scope of the invention and without sacrificing any of its advantages, it is to be understood that all matter herein is to be interpreted as illustrative and not in a limiting sense.

Having thus described my invention, I claim:

1. In a device of the class described, the combination of a pair of adjacent rotatable rollers, alternately placed folder blades and clamping jaws on the periphery of said rollers, said folder blades of one of said pair of rollers cooperating with said clamping jaws of the other of said pair of rollers to form folds in a web of paper passing between said rollers, alternate slack-forming bars and slack-forming slots adjacent the periphery of said rollers, said bars located in advance of said clamping jaws, said

slots located in advance of said folder blades, and slack-forming bars of one of said pair of rollers entering slack-forming slots of the other of said pair of rollers to form a loop of the web in the slot prior to the folding of the web by the following set of blades and jaws and withdrawing during the folding to release the loop to provide slack in advance of the fold.

2. In a device of the class described having a pair of adjacent rotatable rollers provided with alternately placed cooperating folder blade members and clamping jaw members for forming folds in a web of paper, the combination of bar means carried by said rollers in advance of said clamping jaw members, and slot means carried by said rollers in advance of said folder blade members, said bar means forcing said web into said slot means to provide a loop portion in said web in advance of said folder blade before said jaw member begins to fold the web over said blade and said bar means withdrawing from said slot means during the folding to release the loop to provide slack in advance of the fold.

3. In a device of the class described having a pair of adjacent rotatable rollers provided with peripherally-spaced alternately placed cooperating folder blade and clamping members for forming folds in a web of paper, the combination of bar means in advance of each clamping member, and slot means in advance of each folder blade, said bar means of one roller being moved into said slot means of the other roller during a portion of a rotation of said rotatable rollers before the forming of the fold by the respective blade and clamping members behind the bar and slot means and being moved out of said slot means during the folding to provide slack in advance of the fold.

4. In a device of the class described for forming folds in a web of paper, the combination of a pair of adjacent rotatable rollers, alternately-spaced folder blades and clamping jaws on the periphery of said rollers, said folder blades of one of said pair of rollers cooperating with said clamping jaws of the other of said pair of rollers to form said folds in said web of paper, and alternate slack-forming bars and slack-forming slots on the periphery of said rollers, said bars located in advance of said clamping jaws, said slots located in advance of said folder blades, said bars and slots being spaced from the respective jaws and blades behind to move together and apart during the rotation of said rollers whereby slack is formed in said web in advance of said folder blade before said clamping jaw forms said fold about said folder blade and whereby the slack is released during the forming of the folds.

5. In a folding machine having a pair of adjacent rotatable rollers provided with alternately-spaced cooperating folder blade and clamping members on the roller peripheries for forming folds in a web of paper, the combination of slack-producing means for producing slack in said web in advance of said folder blade comprising alternate slack-forming bars and slack-forming slots adjacent the periphery of said rollers, said bars located in advance of said clamping members, said slots located in advance of said folder blade, said bars entering said slots to form a loop of the web therein before the fold forming and withdrawing during the folding to release the web loop, and slack-forming means for producing slack in said web behind said folder blade comprising a pair of web drive rollers and a pair of web drag rollers for said web on the path of the web between said drive rollers and said pair of rotatable rollers, and said drive rollers moving said web faster than said drag rollers whereby a loop of slack is formed in the web between said drive rollers and said drag rollers.

6. In a device of the class described having a pair of adjacent rotatable rollers provided with alternately-spaced cooperating folder blade members and clamping jaw members for forming folds in a web of paper, slack-producing means for producing slack in advance of said folder blade comprising bar means carried by said rollers in advance of said clamping members and slot means carried by said rollers in advance of said folder blade members, said bar means moving said web into said slot means before the fold is formed to form a loop of slack in the web and withdrawing during the folding to release said loop, and slack-producing means for producing slack behind said folder blade comprising a pair of feed rollers and a pair of drag rollers, said feed rollers adjusted to move said web faster than said drag rollers to provide a slack portion in said web between said feed rollers and said drag rollers.

7. The device as claimed in claim 6 in which the contact pressure between the drag rollers is adjustable to vary the drag force of said rollers on said web.

8. The method of providing slack in the web of a strip of sheet material during the introduction of longitudinally spaced transverse folds in successively opposite directions therein by successively deflecting portions of the web into gripping members on first and second adjacent rotatable rollers which comprises forming a first fold by deflecting portions of the web into engagement with a first set of gripping members on the first roller, rotating the rollers to pull the web against the first roller surface behind said first set of gripping members, forcing a portion of the web into a slot in the first roller by a cooperating bar on the second roller to form a loop of slack in the web and forming a second fold a predetermined distance on the web from the first fold by deflecting portions of the web behind the first named portions into engagement with a second set of gripping members on the second roller while at the same time further revolving the rollers and withdrawing the bar from the slot, thereby providing sufficient slack in the web between the first and second sets of gripping members to permit deflection of the web into said second set of gripping members.

9. The method of providing slack in the web of a strip of sheet material during the introduction of longitudinally spaced transverse folds in successively opposite directions therein by successively deflecting portions of the web into gripping members on first and second adjacent rotatable rollers which comprises forming a first fold by deflecting portions of the web into engagement with a first set of gripping members on the first roller, rotating said rollers while the web is gripped by said first set of gripping members thereby moving the web against a portion of the first roller behind the first set of gripping members, further rotating said first roller to force a portion of the web into a slot in said first roller by a cooperating bar on the second roller and forming a second fold a predetermined distance along the web from the first fold by deflecting portions of the web behind the first named portions into engagement with a second set of gripping members on said second roller while at the same time still further revolving the rollers to withdraw the bar from the slot thereby providing sufficient slack in the web between the first and second sets of gripping members to permit deflection of the web into said second set of gripping members.

10. The method of providing slack in the web of a strip of sheet material during the introduction of longitudinally spaced transverse folds in successively opposite directions therein by successively deflecting portions of the web into gripping members on first and second adjacent rotatable rollers which comprises forming a first fold by deflecting portions of the web into engagement with a first set of gripping members on the first roller, rotating the rollers to pull the web against the first roller surface behind said first set of gripping members, feeding the web toward the rollers by a drive means, controlling the web feed by a drag means, moving said web faster through said drive means than through said drag means whereby a first slack loop is formed between said drive and drag means, forcing a portion of the web into a slot in the first roller by a cooperating bar on the sec-

ond roller to form a second loop of slack in the web, and forming a second fold a predetermined distance on the web from the first fold by deflecting portions of the web behind the first named portions into engagement with a second set of gripping members on the second roller while at the same time further revolving the rollers and withdrawing the bar from the slot whereby said first and second loops of slack permit deflection of the web into said second set of gripping members.

References Cited in the file of this patent

UNITED STATES PATENTS

1,003,446	Gauch	Sept. 19, 1911
2,336,051	Young	Dec. 7, 1943
2,531,213	Hand	Nov. 21, 1950
2,626,145	Sabee	Jan. 20, 1953

FOREIGN PATENTS

385,107	Great Britain	Dec. 22, 1932