April 1, 1930. R. M. HORTVET 1,752,433

ROTARY FORGING FURNACE

Filed June 15, 1928 3 Sheets-Sheet 1

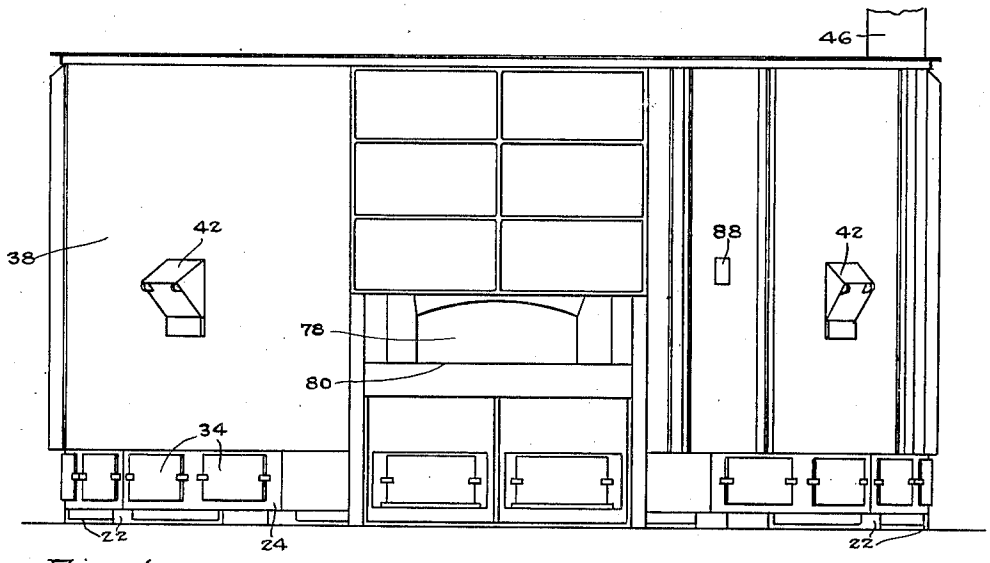

Fig-1

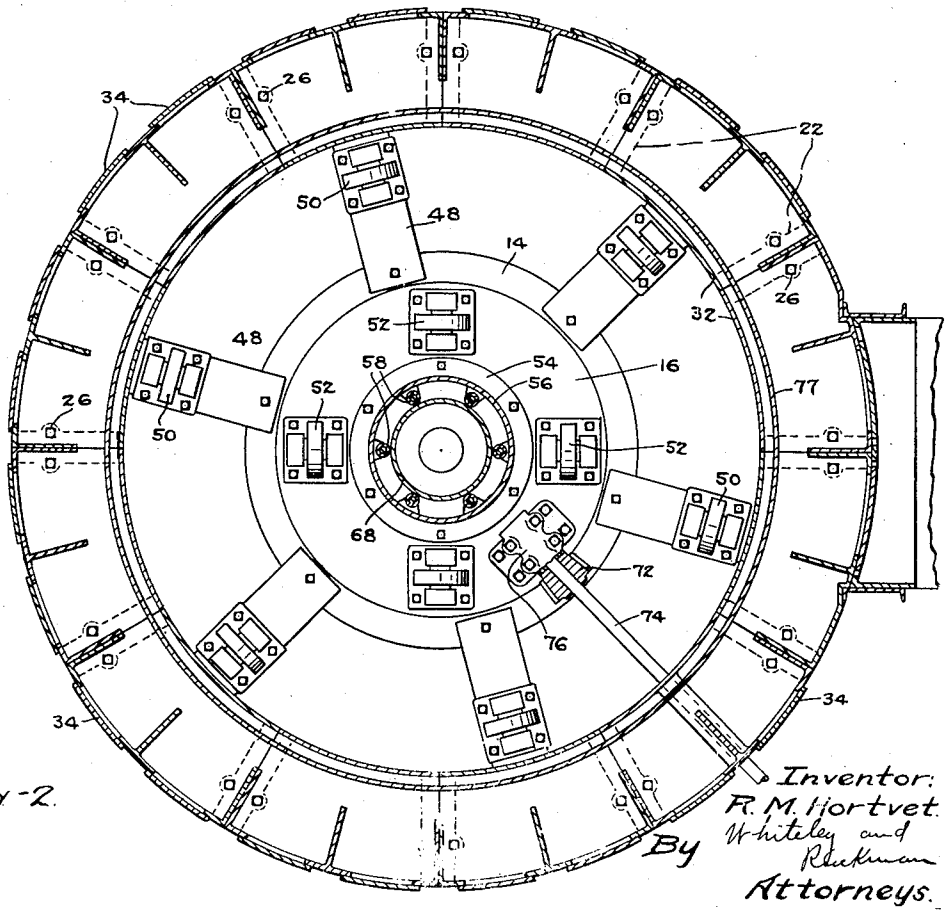

Fig-2.

Inventor:
R. M. Hortvet
Whiteley and
Rackman
Attorneys.

By

April 1, 1930. R. M. HORTVET 1,752,433

ROTARY FORGING FURNACE

Filed June 15, 1928 3 Sheets-Sheet 2

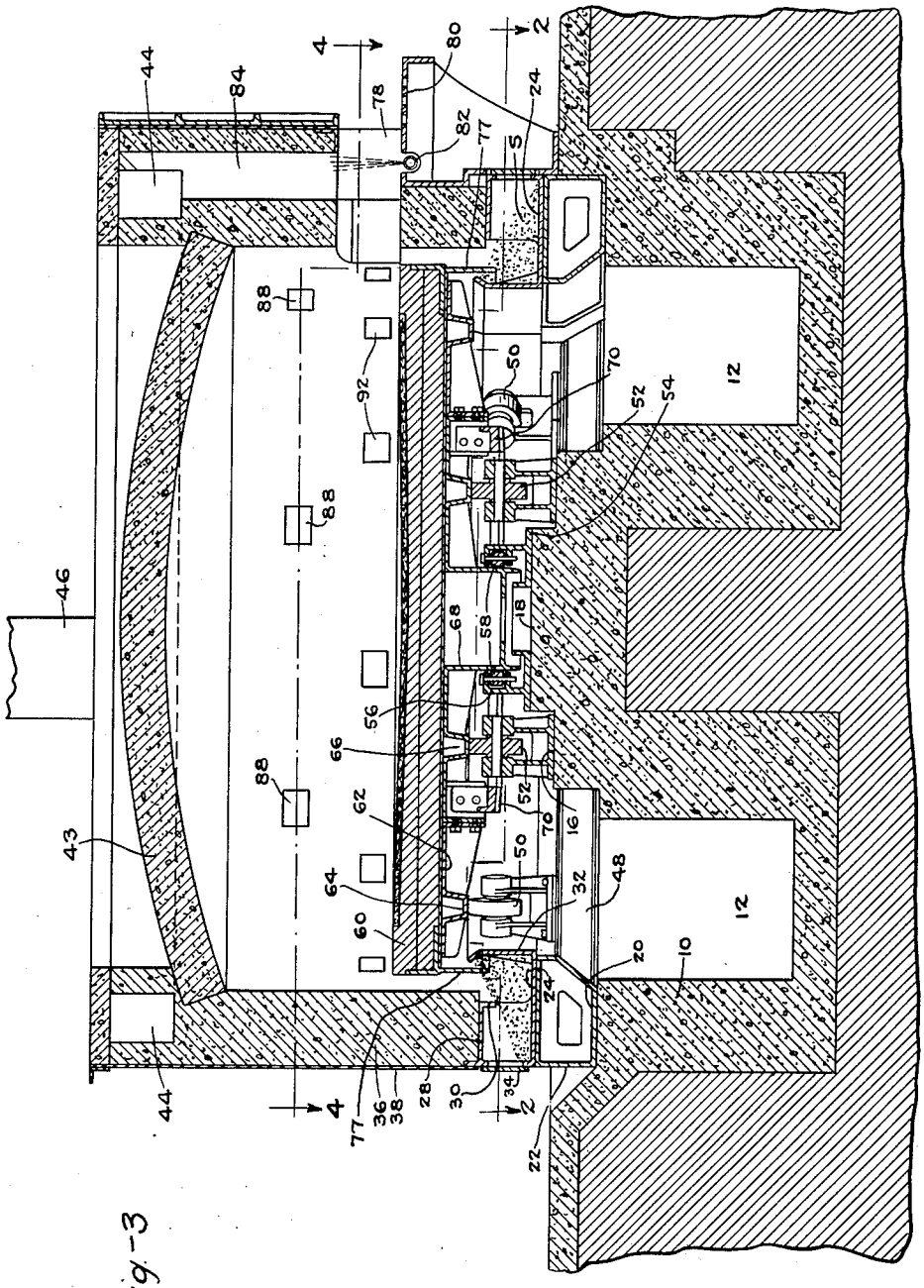

Fig-3

Inventor:
R. M. Hortvet.
By Whiteley and Ruckman
Attorneys.

April 1, 1930. R. M. HORTVET 1,752,433

ROTARY FORGING FURNACE

Filed June 15, 1928 3 Sheets-Sheet 3

Fig-4

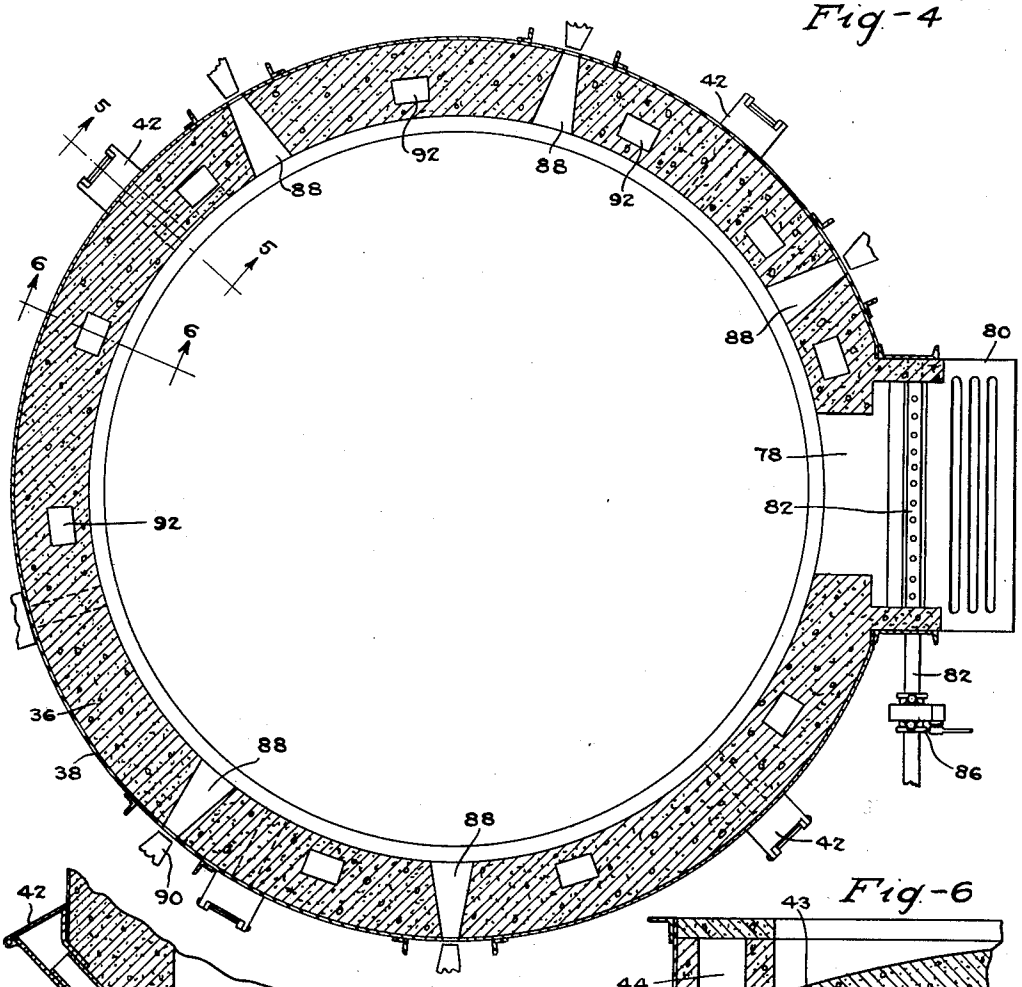

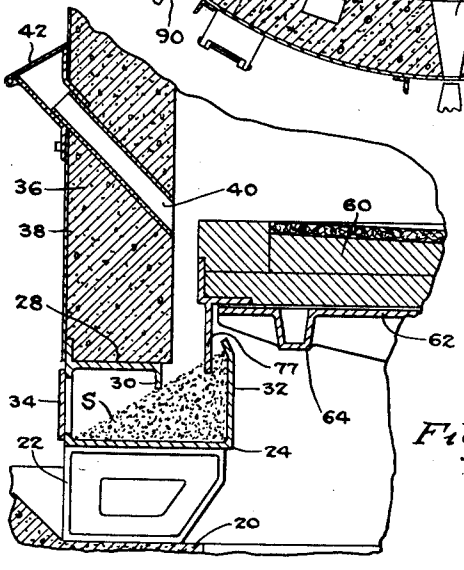

Fig-5

Fig-6

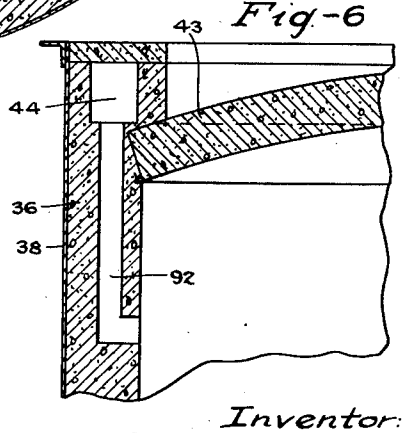

Inventor:
R. M. Hortvet
By Whiteley and Ruckman
Attorneys.

Patented Apr. 1, 1930 1,752,433

UNITED STATES PATENT OFFICE

RICHARD M. HORTVET, OF MINNEAPOLIS, MINNESOTA, ASSIGNOR TO MAHR MANUFACTURING COMPANY, OF MINNEAPOLIS, MINNESOTA, A CORPORATION

ROTARY FORGING FURNACE

Application filed June 15, 1928. Serial No. 285,687.

My invention relates to rotary forging furnaces, and while intended more particularly for heating metal to be forged, it may be employed for annealing also. Among the objects of the invention are the provision of means for preventing heating of the operating mechanism for a turntable with which the furnace is provided, the provision of means for keeping the turntable accurately in place for rotative movement, and the provision of means for protecting the operator from the heat of the furnace.

The full objects and advantages of my invention will appear in connection with the detailed description thereof, and the novel features of my inventive idea will be particularly pointed out in the claims.

In the accompanying drawings which illustrate a practical embodiment of my invention, Fig. 1 is a front elevational view of the furnace. Fig. 2 is a view thereof in horizontal section on the line 2—2 of Fig. 3. Fig. 3 is a view in central vertical section. Fig. 4 is a view in horizontal section on the line 4—4 of Fig. 3. Fig. 5 is a fragmentary view in vertical section on the line 5—5 of Fig. 4. Fig. 6 is a fragmentary view in vertical section on the line 6—6 of Fig. 4.

As shown in the drawings, I provide a foundation 10 containing an annular pit 12 from the center of which the foundation extends upwardly in the form of steps 14, 16, and 18 having circular outer margins. The foundation wall around the pit 12 has a level top surface 20 upon which rest a circular series of narrow castings 22 which are spaced from each other at considerable distances as will be apparent from Fig. 2. Above the castings 22, there is a circular series of hollow castings 24 which butt against each other and are secured by bolts 26 passing through the bottoms thereof and through flanges on the castings 22. The castings 24 are open at their inner top portions while their outer top portions consist of walls 28 as will be seen in Figs. 3 and 5, the inner margins of said walls being provided with downturned flanges 30. As will be understood from Fig. 2, the walls of the castings 24 which butt against each other extend inwardly only as far as the top walls so that there is an annular passageway between the butting flanges 30 and the butting inner walls 32 of the castings 24. The outer walls of the castings 24 are provided with doors 34 which permit removal of slag as will hereinafter appear. The top walls of the castings 24 support a refractory circular furnace wall 36 which is encased in a sheet metal shell 38. This wall is provided with a series of chutes 40 provided with trap doors 42 so that the annular passageway lying outside the conjoint wall 32 may be provided with sand S or similar granular material to form a seal as will presently appear. The upper end of the wall 36 extends above the furnace top 43 and contains an annular flue 44 with which a stack 46 is connected. The step 14 and the foundation surface 20 constitutes supports for a number of bridging members 48 which carry bearings for horizontal rollers 50. The step 16 supports bearings for a number of horizontal rollers 52. The step 18 constitutes a support for a circular member 54 having an upstanding circular flange 56 which carries bearings for a number of vertical rollers 58. The bottom of the furnace proper is constituted by a refractory turntable 60, the bottom of which consists of sheet metal 62 having an outwardly disposed downwardly extending circular member 64 which rests upon the rollers 50 and having an inwardly disposed downwardly extending circular member 66 which rests upon the rollers 52. The sheet metal 62 also has a central depending circular flange 68 which fits nicely within the surrounding vertical rollers 58. The sheet metal 62 also carries an underlying ring gear 70 with which meshes a beveled pinion 72 shown in Fig. 2, this pinion being secured to a shaft 74 driven from any suitable source of power and having a bearing 76 for its inner end supported on the step 16. The turntable also carries a downwardly depending annular flange 77 which extends down outside the conjoint wall 32. The furnace wall 36 contains a charging opening 78 from the bottom of which a grid 80 extends outwardly. Across the bottom of the opening 78, there is a pipe 82 in the upper

side of which are perforations directed toward a vertical flue 84 in the furnace wall communicating with the annular flue 44 leading to the stack. The pipe 82 is provided with a shutoff valve 86 and is connected to a suitable source of air under pressure. The furnace wall 36 contains a number of openings 88 for receiving the tips 90 of suitable fluid fuel burners such as disclosed in my Patent Number 1,673,194, issued June 12, 1928. The openings 88 are disposed between the top and bottom of the fire chamber of the furnace while flues 92 extend from near the bottom of the fire chamber up into the annular flue 44.

The operation and advantages of my invention will be understood in connection with the foregoing description. The operator stands in front of the charging opening 78 and places the articles to be heated upon the turntable 60 and removes them therefrom at the proper time. He is protected from the heat of the furnace by a cold air screen produced by the blast of air directly upwardly from the perforated pipe 82. This blast of air passes up to the stack 46 and thus increases the draft of the furnace. The heat delivered through the openings 88 finds its way to the stack through the flues 92. As will be understood from Fig. 5, the flange 77 of the turntable rotates in the layer of sand or other granular material so that a seal is provided which prevents the heat from passing underneath the turntable. Thus the operating mechanism of the turntable is not only protected from the heat in the furnace, but the wide openings between the lower castings 22 permit cold air to pass into the pit and around the operating mechanism. The openings between these castings also permit entrance of one or more persons into the pit where they may have access to the operating mechanism for the turntable. The doors 34 provide for the removal of slag which comes from the articles being heated. The turntable is kept accurately in place by the conjoint action of the horizontal rollers 50 and 52 and the vertical rollers 58.

I claim:

1. In a rotary forging furnace, the combination of a foundation, a circular series of castings mounted around said foundation in spaced relation to each other, a furnace wall supported by said castings, a turntable within said wall, operating mechanism for said turntable underneath the latter, and sealing means between the interior of the furnace and said operating mechanism.

2. In a rotary forging furnace, the combination of a foundation, a circular series of castings mounted around said foundation in spaced relation to each other, a circular series of castings butted together and carried by said first castings, a furnace wall mounted on said second castings, a turntable within said wall, operating mechanism for said turntable underneath the latter, and a sand seal at the outer edge of said turntable.

3. In a rotary forging furnace, the combination of a foundation containing a pit, a circular series of castings mounted around said foundation in spaced relation to each other, a circular series of hollow castings butted together and carried by said first castings, said hollow castings constituting receptacle for granular material which are open at their inner upper portions, a furnace wall mounted on the outer portions of said hollow castings, a turntable within said furnace wall, operating mechanism for said turntable underneath the latter and above said pit, and a circular flange extending downwardly from said turntable into said granular material.

In testimony whereof I hereunto affix my signature.

RICHARD M. HORTVET.