March 17, 1959 L. V. SORG ET AL 2,877,714

VARIABLE DISPLACEMENT TUBING PUMP

Filed Oct. 30, 1957 4 Sheets-Sheet 1

Fig. 1.

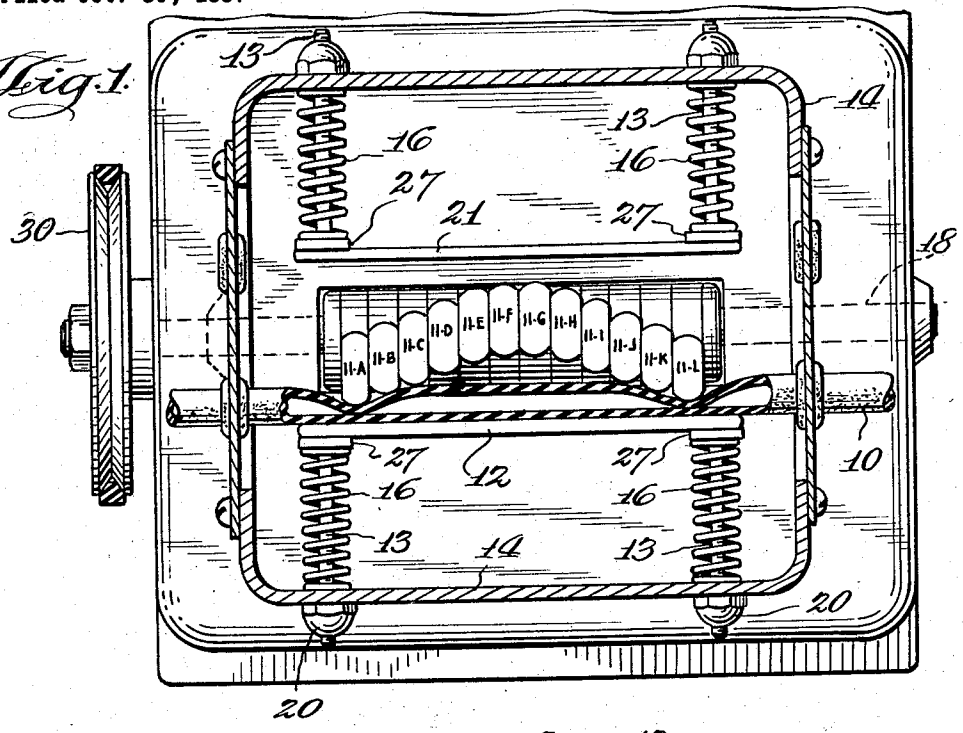

Fig. a.

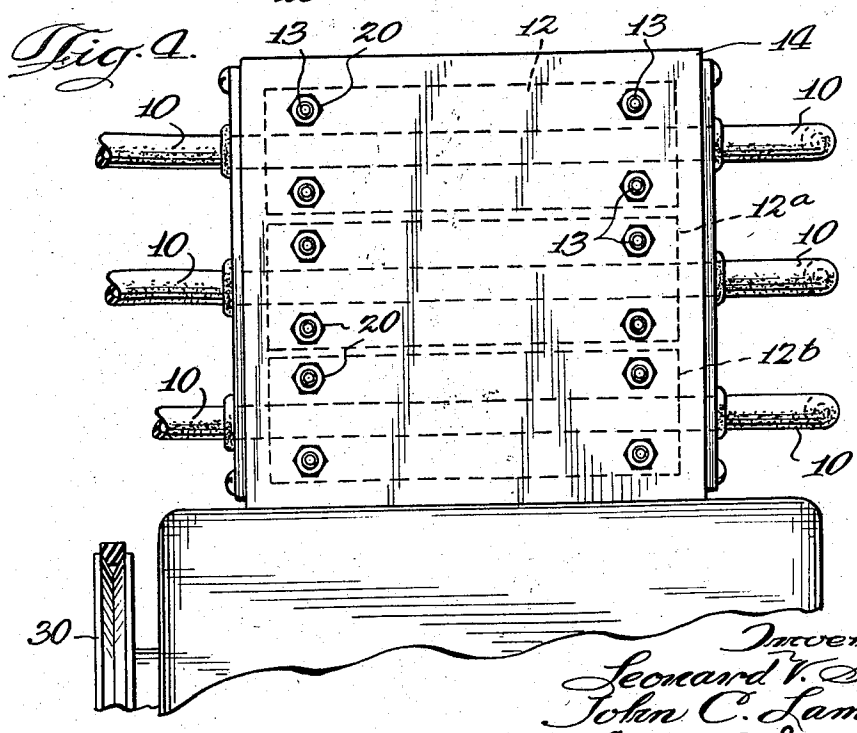

Inventors
Leonard V. Sorg
John C. Lamkin
By Everett A. Johnson
attorney

March 17, 1959 L. V. SORG ET AL 2,877,714

VARIABLE DISPLACEMENT TUBING PUMP

Filed Oct. 30, 1957 4 Sheets-Sheet 2

Fig. 2.

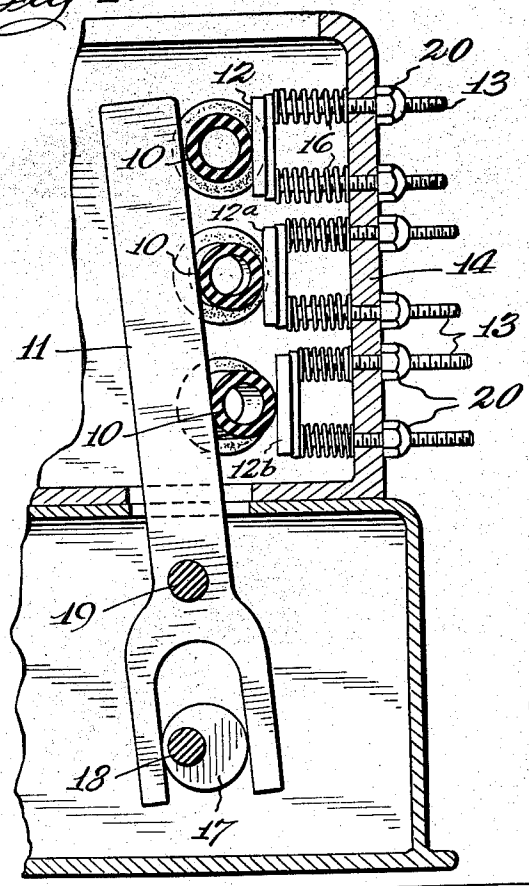

Fig. 3.

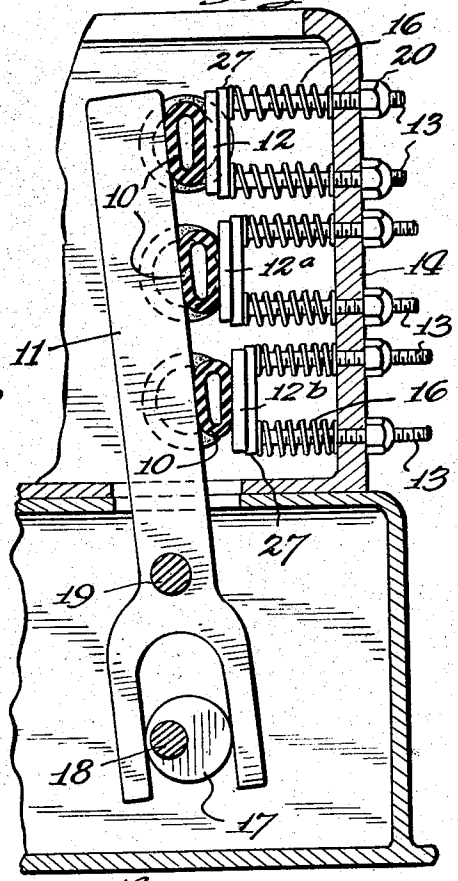

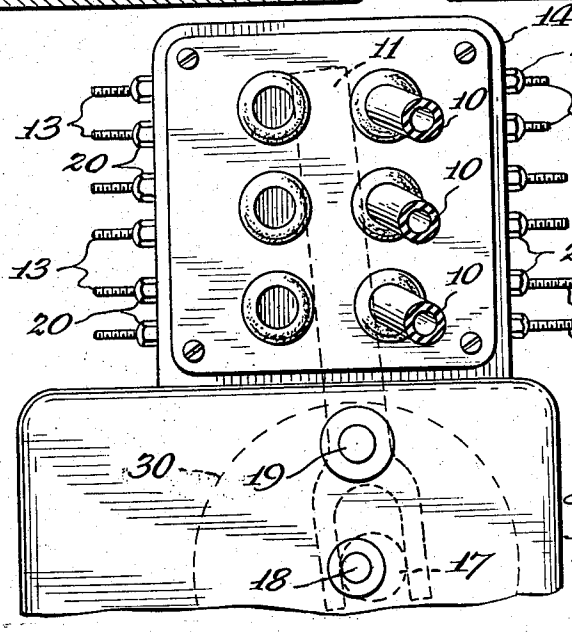

Fig. 5.

Inventors
Leonard V. Sorg
John C. Lamkin
By Everett A. Johnson
attorneys

March 17, 1959 L. V. SORG ET AL 2,877,714

VARIABLE DISPLACEMENT TUBING PUMP

Filed Oct. 30, 1957 4 Sheets-Sheet 3

Fig. 6.

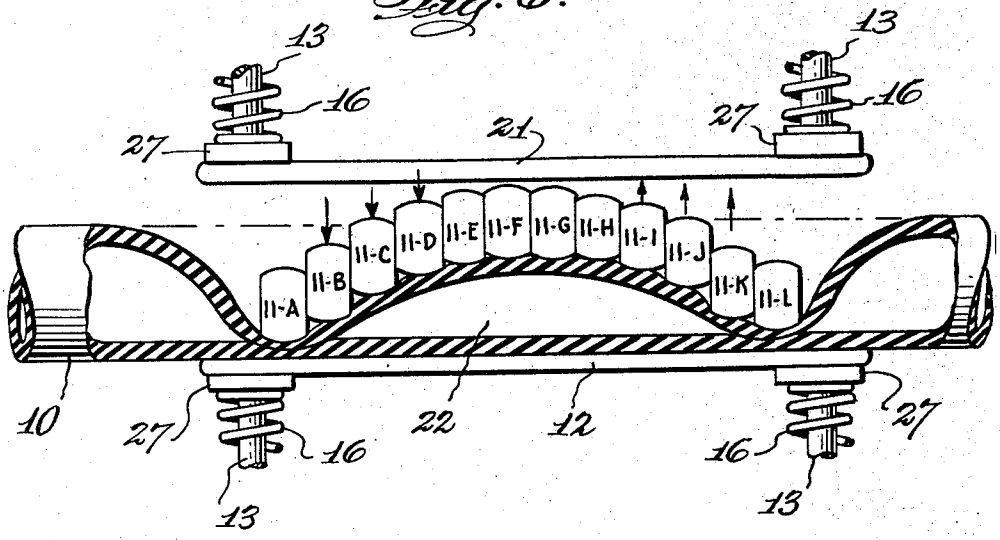

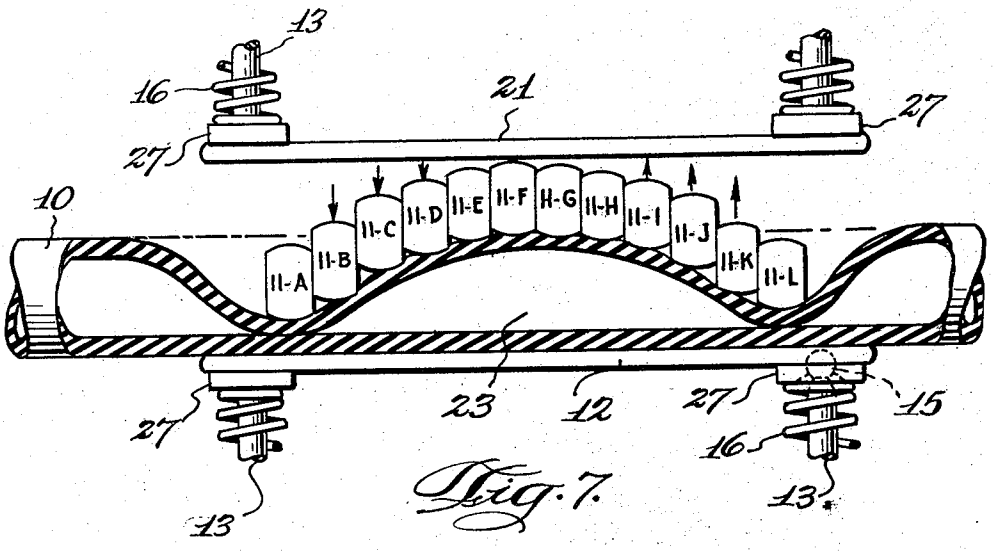

Fig. 7.

Inventors
Leonard V. Sorg
John C. Lamkin
By Everett A. Johnson
attorney

March 17, 1959 L. V. SORG ET AL 2,877,714

VARIABLE DISPLACEMENT TUBING PUMP

Filed Oct. 30, 1957 4 Sheets-Sheet 4

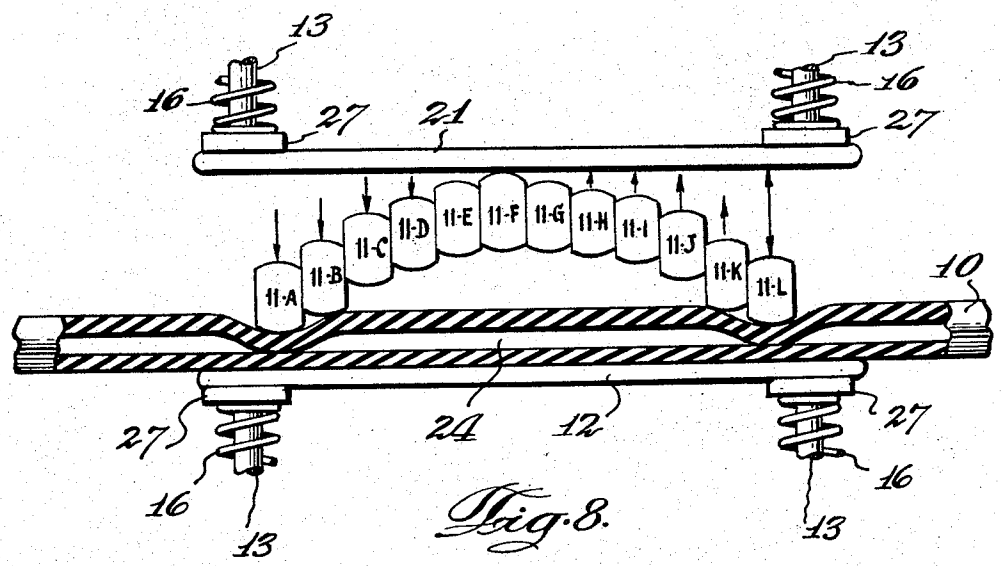

Fig. 8.

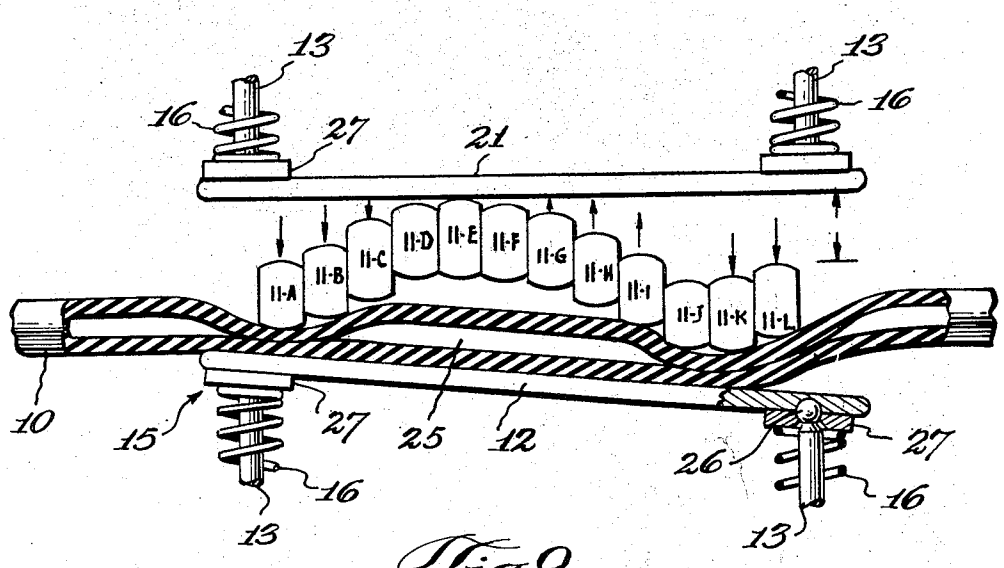

Fig. 9.

Inventors
Leonard V. Sorg
Tobias C. Lamkin
By Everett A. Johnson
attorney

United States Patent Office 2,877,714
Patented Mar. 17, 1959

2,877,714

VARIABLE DISPLACEMENT TUBING PUMP

Leonard V. Sorg, Kansas City, and John C. Lamkin, Independence, Mo., assignors to Standard Oil Company, Chicago, Ill., a corporation of Indiana

Application October 30, 1957, Serial No. 693,316

7 Claims. (Cl. 103—149)

This invention relates to pumps and more particularly to peristaltic pumps adapted to transfer a plurality of streams.

Pumps employing flexible tubes have been proposed heretofore and in the previously known forms of such pumps, a flexible tube is progressively compressed by a series of fingers. Variations in rates of flow are obtained by providing tubing of different size or by a variable speed motor and gear system which changes the speed of the movement of the fingers. Such means for varying pumping rate are both expensive and inconvenient.

It is, therefore a primary object of our invention to provide a peristaltic pump which is readily adjustable and which is adaptable for a plurality of separate streams. An additional object is to provide a pump which is adapted for continuous duty and wherein the output of such pump can be adjusted without interrupting the operation of the pump. A further object of the invention is to provide a pump of this type which has a long operating life. A more specific object of the invention is to provide a peristaltic pump wherein a plurality of streams is pumped through a plurality of tubes, the flow rate through each of said tubes being independent of each other tube. These and other objects of the invention will appear hereinafter as the description thereof proceeds.

Briefly, our invention comprises an apparatus for simultaneously pumping several streams in individual tubes with a single constant speed drive. The variability in the pumping rate is obtained by controlling the extent to which the tubing may expand upon the release of the fingers and by the number of fingers involved in the pumping action over a given length of the tubing. The capacity of each tubing is adjusted by a controlled positioning of the contact plate associated with each finger, the contact plate being positioned by appropriate springs and set screws. The number of fingers involved in the pumping action on the other hand can be determined by limiting the number of adjacent backing plates which can cooperate with the pumping fingers.

Further details of construction and advantages of our invention will be described in connection with a preferred embodiment thereof illustrated in the accompanying drawings wherein:

Figure 1 is a top plan view;

Figures 2 and 3 are front elevations with parts removed to illustrate the drive mechanism;

Figure 4 is a side view of the apparatus in Figures 1 to 3;

Figure 5 is a front view with an end plate designed to accommodate six tubes;

Figures 6 and 7 illustrate how the pumping capacity can be varied by positioning the recoil plate when using a large pumping tube; and

Figures 8 and 9 schematically illustrate the adjustment of the backing plate to control pumping rate.

For a constant speed drive the flow rate of our pump is dependent only upon the volume of fluid trapped within the tube **10** as the fingers **11A—11L** move forward progressively. By our invention the volume of trapped liquid can be varied within broad limits in two ways.

The pump operates by moving the series of fingers **11A—11L** against the elastic tube **10** which is held in place by the adjustable plates **12**. These plates serve to locate the tube of selected size in proper position with respect to the fingers **11A—11L**. Each plate **12**, **12***a* and **12***b* is supported by a pair of adjustable threaded rods **13**. These rods pass through the casing **14** of the apparatus and have one end pivoted by a ball-type joint **15** to the backing plates **12**, **12***a* and **12***b* allowing horizontal and vertical tilting of each plate. The springs **16** hold the plates **12**, **12***a* and **12***b* against the tubes **10**.

The fingers **11A—11L** are operated from a cam **17** mounted on a shaft **18** driven by pulley **30** and are pivoted on bearing shaft **19**. As the cam shaft **18** is rotated, the associated cams **17** cause the fingers **11A—11L** to oscillate about the bearing shaft **19**. As the fingers **11A—11L** move forward, i. e. toward the backing plates **12**, **12***a* and **12***b*, they squeeze the rubber tube **10** against the plates **12**, **12***a* or **12***b*. The forward and backward position and the horizontal and vertical angle of each plate is controlled by tightening or loosening the nuts **20** on the four rods **13** supporting each plate **12**, **12***a* or **12***b*.

Some control can be obtained by slanting the plates **12**, **12***a* and **12***b* so that the number of figures involved in the pumping action is reduced. Figure 2 shows the positioning of the plates **12**, **12***a* and **12***b* for maximum throughput and Figure 3 shows the positioning of the plates **12**, **12***a* and **12***b* for a lesser throughput.

Figures 6 and 7 show how the capacity of the pump can be varied with a tube **10** which is large enough to occupy the entire space within which the fingers **11A—11L** operate. The volume of the tube embraced by the fingers is dependent upon the extent to which the tube **10** is permitted to resume its original shape when the center fingers **11F** and **11G** reach the point of most backward travel.

Figure 6 represents a positioning of the tube **10** in which the plates **12**, **12***a* or **12***b* are disposed so that when any finger is at its most withdrawn position with respect to a backing plate **12**, the tube **10** does not open completely.

Figure 7 represents the setting of the plates **12**, **12***a* and **12***b* which is used if a maximum flow through tube **10** is desired. Here it will be noted that the maximum I. D. of the portion of the tube embraced by the fingers is equivalent to the normal I. D. of the tube whereas in Figure 6 the I. D. at **22** is substantially less than the full capacity of the tube **10**. Accordingly, in Figure 7, the volume **23** entrapped between the outer pair of fingers **11A** and **11L** is the maximum obtainable.

From Figures 6 and 7 it will be apparent that by adjusting the backing plate **12**, the capacity of the pump is varied and controlled. This control is possible on each of the plurality of tubes **10** of Figures 2 and 3 and the adjustment is independent of each of the individual tubes **10** in the pump.

Figures 8 and 9 illustrate a system for positioning the tube **10** to obtain variable flow rates wherein the outside diameter of the tube **10** is such that it does not occupy completely the space between the fingers **11** and the volume entrapped in the tube **10** is dependent upon which pair of fingers will act to close the tube at two points thereby trapping the liquid therebetween. In Figure 8, representing the maximum flow rate, the backing plate **12** is positioned so that the tube **10** is simultaneously closed by the most remote fingers **11A** and **11L** in the array. On the other hand, in Figure 9, the section is illustrated wherein something less than the total span of fingers closes space portions of the tube simultaneously to entrap the fluid volume **25** being pumped. In Figure 9, the backing plate **12** is slanted by adjusting the rods **13** so that fingers **11A** and **11L** close the tube **10**. This is

accomplished by allowing one side of the plate **12** to travel with the tube **10** as the finger **11** moves.

The plate **12** is anchored on the other side by tightening the corresponding adjusting nut **20** so that the tube **10** will close when a finger **11J** has reached its forward position. The nuts adjusting the first side of the plate are loosened so that the spring **16** displaces the plate **12** to the position shown which allows the tube **10** to be closed before the end finger **11L** in the array reaches its maximum forward position. The end finger **11L** then completes its travel forwardly with the tube **10** closed as shown in Figure 9.

Referring to Figure 9, the adjusting rod **13**, being provided with the ball-type joint **15** shown in Figures 8 and 9, allows the plate **12** to be slanted at an angle in relation to the rod **13**. The plates **12**, **12***a* and **12***b* are drilled and ground to hold a small spherical bearing **26** which is held in place by a washer **27** to provide a universal joint. The springs **16** override the rods **13**. Ball joints are provided at the corners of all backing plates **12**, **12***a* and **12***b*.

Figure 5 shows an end plate **28** with three tubes **10** although a plurality of six tubes may be operated within the pump. Erosive action of the end plate **28** upon the flow tube **10** is prevented by providing the grommets **29** in the end plate **28**. Removal of the end plate **28** reveals the apparatus as shown in Figures 2 and 3 having the individually controllable backing plates **12**, **12***a* and **12***b*. A set of four studs or rods **13** attached by universal joints **15** at the backing plate **12** and the associated springs **16** is the means whereby the distance between the fingers **11** and the backing plates **12**, **12***a* and **12***b* may be varied. The positions of the backing plates **12**, **12***a* and **12***b* are adjustable by means of nuts **20** upon the threaded studs or rods **13**. Each of the three backing plates **12** and **21** is individually and separately variable which permits the control of the separate flows of the plural streams in the tubes **10**.

From the above it will be apparent that we have attained the objects of our invention by providing an apparatus in which the flow in any particular stream can be adjusted during operation of the pump without affecting any of the other streams. This can be done without modifying the drive mechanism and without varying the size of the tube used.

Although we have described our invention with refence to preferred embodiments thereof, it should be understood that these are by way of illustration only. Accordingly, other modifications and techniques are contemplated and can be made by those skilled in the art without departing from the spirit and scope of the invention.

What we claim is:

1. Pumping means comprising a housing having a pair of spaced walls, a shaft supported in said housing, an array of pumping fingers journalled on the said shaft to provide a common pivotal axis therefor, each of said fingers extending upwardly between said walls, a bifurcated yoke on the lower ends of said fingers, a second shaft journalled in the said housing, a series of cams fixed to the said second shaft, each cam engaging one of said yokes, individual tube-supporting plates mounted in the housing between said walls, said fingers being successively oscillatable about the first shaft in response to rotation of said cam shaft to swing said fingers towards said tube-supporting plates, resilient means adjustably supporting said plates, and a plurality of flexible tubes extending through said housing between said array of fingers and said tube-supporting plates, said tube-supporting plates being individually adjustable to vary the pumping rate of each tube independently of each other tube.

2. Pumping means as defined in claim 1, the spacing of said plates from said array of fingers being slightly less than the internal diameter of a tube passing through said housing.

3. A peristaltic pump comprising in combination a pump housing, an array of elastic tubes extending through said housing, an array of tube-compressing fingers in said housing, a first shaft to which said fingers are journalled intermediate their ends, a second shaft, parallel to the first, a plurality of cams on said second shaft, said cams engaging cam follower means on the ends of said fingers, whereby rotation of said cams actuates said fingers successively against said tubes, and stop plate means backing said array of elastic tubes, said stop plate means being individually and independently supported in opposition to the action of said fingers whereby the pumping capacity of each tube is independently adjustable by the position of the stop plate means.

4. The pump of claim 3 wherein the stop plate means are adjustable from end to end thereby to control the maximum span of fingers in said array.

5. The pump of claim 3 wherein the capacity of the pump is adjusted by the positioning of the individual stop plate means associated with the corresponding tube so as to limit the full expansion of the tube.

6. The pump of claim 3 wherein said elastic tubes are all of the same internal flow capacity.

7. The pump of claim 3 wherein said housing includes spaced end plates, said end plates being provided with a plurality of pairs of aligned tube-receiving and positioning ports, one pair for each of said elastic tubes.

References Cited in the file of this patent

UNITED STATES PATENTS

2,466,618	Stocks	Apr. 5, 1949
2,546,852	Corneil	Mar. 27, 1951