W. C. CHAPPELL.

FOLDING CRIB AND THE LIKE.

APPLICATION FILED OCT. 9, 1914.

1,179,697.

Patented Apr. 18, 1916.

2 SHEETS—SHEET 1.

Fig. 1.

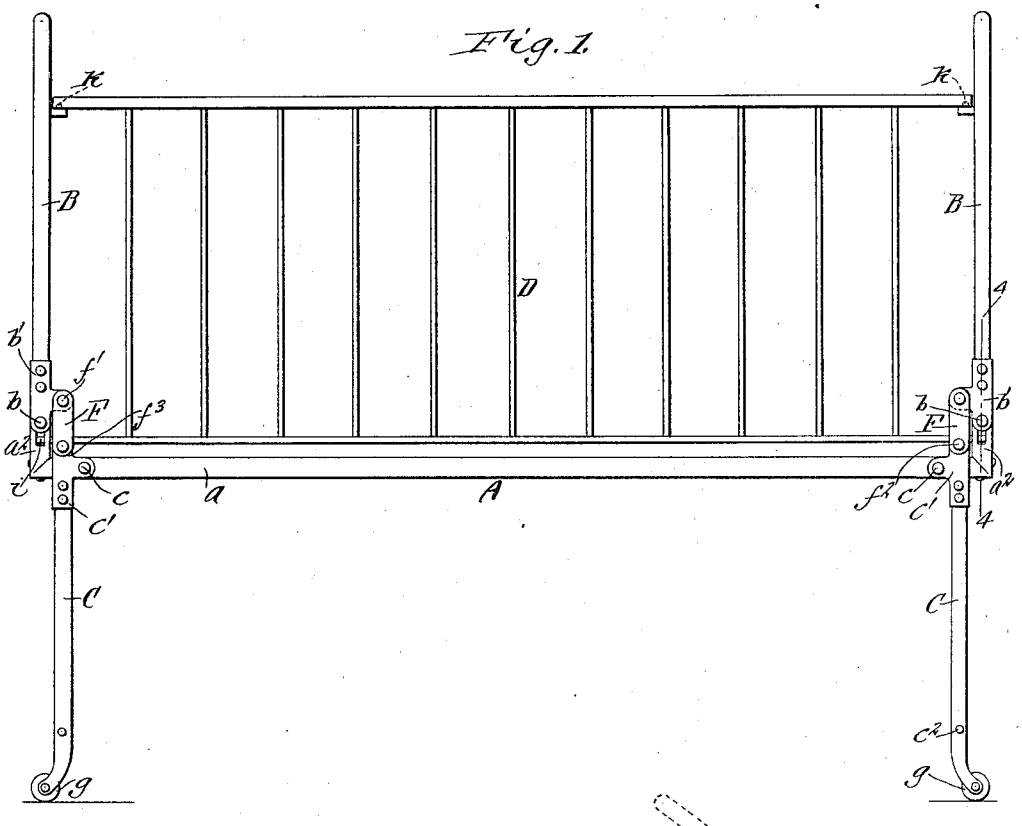

Fig. 2.

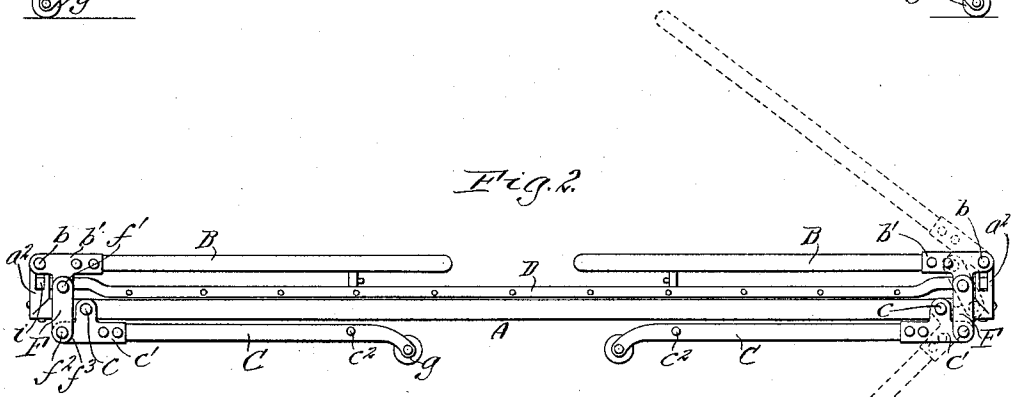

Witnesses:-
Richard Sommer
A. G. Simonds.

Inventor
Walter C. Chappell
By Wilkinson & Parker
Attorneys.

THE COLUMBIA PLANOGRAPH CO., WASHINGTON, D. C.

W. C. CHAPPELL.

FOLDING CRIB AND THE LIKE.

APPLICATION FILED OCT. 9, 1914.

1,179,697.

Patented Apr. 18, 1916.

2 SHEETS—SHEET 2.

Fig. 3.

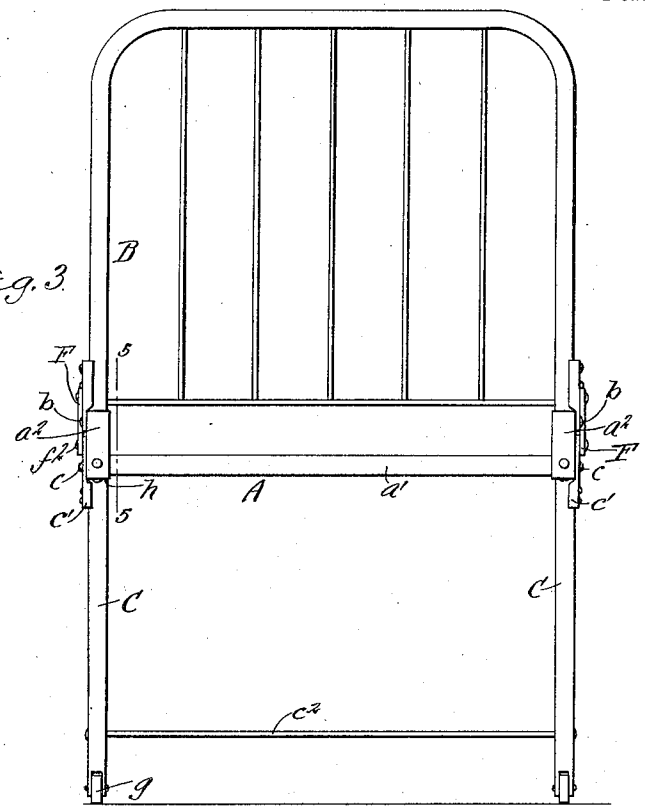

Fig. 4.

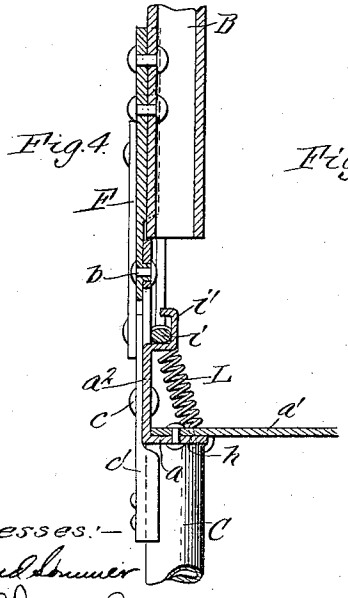

Fig. 6.

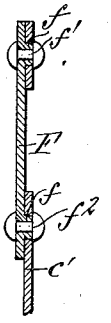

Fig. 5.

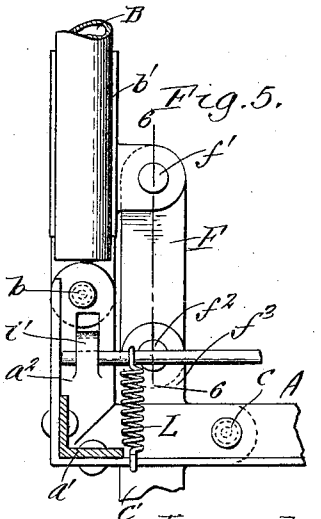

Witnesses:—
Richard Sumner
A. G. Dishong.

Inventor
Walter C. Chappell
By Wilkinson Parker
Attorneys.

THE COLUMBIA PLANOGRAPH CO., WASHINGTON, D. C.

UNITED STATES PATENT OFFICE.

WALTER C. CHAPPELL, OF BUFFALO, NEW YORK, ASSIGNOR TO BARCALO MANUFACTURING CO., OF BUFFALO, NEW YORK.

FOLDING CRIB AND THE LIKE.

1,179,697. Specification of Letters Patent. Patented Apr. 18, 1916.

Application filed October 9, 1914. Serial No. 865,841.

To all whom it may concern:

Be it known that I, WALTER C. CHAPPELL, a citizen of the United States, residing at Buffalo, in the county of Erie and State of New York, have invented a new and useful Improvement in Folding Cribs and the like, of which the following is a specification.

This invention relates to improvements in folding beds, cribs, cots and the like, the improvements being especially suitable for children's cribs.

One object of the invention is to produce a strong, practical and desirable crib, bed or the like, of inexpensive construction which can be quickly and easily folded or collapsed into compact form and set up for use, and which when set up will be stable and rigid.

Other objects of the invention are to provide a crib, cot or the like which can be readily folded and unfolded by a simple movement of the end frames and in which the weight of the structure when setting up the crib operates automatically to retain the parts in the operative position and prevent the accidental collapsing of the crib; and also to improve structures of this sort in the respects hereinafter described and set forth in the claims.

In the accompanying drawings: Figure 1 is a side elevation of a child's folding crib embodying the invention. Fig. 2 is a side elevation thereof showing the same folded, and indicating by dotted lines partially folded positions of one of the end and leg frames. Fig. 3 is an end elevation of the crib. Fig. 4 is an enlarged sectional elevation thereof in line 4—4, Fig. 1. Fig. 5 is an enlarged sectional elevation thereof in line 5—5, Fig. 3. Fig. 6 is a section in line 6—6, Fig. 5.

A represents the horizontal bottom frame of a child's metal crib; B the upright head and foot frames, or end frames; C the legs or leg frames at the ends of the crib; and D the side frames or railings thereof. The end frames B are pivoted at the ends of the bottom frame so that they can be folded or swung downwardly toward each other so as to lie substantially horizontally over the crib bottom or close thereto, and the legs or leg frames are pivoted at the end of the bottom frame so as to fold or swing upwardly toward each other against or close to the underside of the crib bottom. The invention is not dependent upon any particular construction of these several frames or members of the crib and they can be of any usual or suitable construction. The end frames and legs can also be pivoted to the bottom frame to fold as described in any suitable manner.

In the construction shown in the drawings, the bottom frame is composed of angle-iron side bars a connected by end cross bars a', also of angle iron, and the ends of the side bars are bent upwardly forming upright corner extensions a^2 to which the end frames B are pivoted at their lower ends by rivets or other suitable pivots b. Preferably the side bars of the end frames, which are tubular, have plates b' riveted to their lower ends for the engagement of the pivots b. The bed spring or resilient bed bottom (not shown) can be attached directly to the bottom frame A or it can be made separate from the crib frame and removably supported on the bottom frame A, as may be desired, both constructions being common.

The legs C shown are pivoted to the bottom frame A preferably by rivets or other suitable pivots c connecting the side bars of the bottom frame and plates c' riveted to the upper ends of the legs, which are tubular, and the two legs at each end of the crib are preferably connected as by a cross rod c^2 so as to form a single leg frame at each end of the crib, but, as stated, the legs can be constructed and pivoted to the bottom frame in other ways without departing from the invention.

F represents links which connect the side bars of each end frame B to the adjacent legs C in such a way that the folding of the end frames downwardly over the bottom frame will swing the legs upwardly beneath the bottom frame, as indicated in Fig. 2. In order to reduce the wear and play at the pivot joints between the movable parts and make the crib more rigid and stable, the links F are provided on one side with bosses f raised thereon by punching or otherwise, through which the rivets f' and f^2 connecting the links to the plates b' and c' pass. These bosses are seated in corresponding holes in the plates b' and c' and relieve the rivets from strain and wear. They also serve as stop shoulders to prevent the joints from being riveted together tight enough to make them stiff. The plates b'

and c' are also preferably provided with similar bosses, indicated by dotted lines in Fig. 5, for the pivots b and c connecting the end and leg frames to the bottom frame. Preferably the links are pivoted to the legs C and to lateral lugs f^3 on the plates c' of the end frames at points such that when the crib is set up for use the links will stand substantially in the transverse vertical planes of the legs, and the pivots c connecting the legs to the bottom frame are offset inwardly from said vertical planes of the legs. With such an arrangement of the parts it is necessary for the bottom frame to lift somewhat to allow the legs to fold upwardly from their vertical operative position, and the weight of the bottom frame and the parts supported thereby tends to prevent the folding or collapsing of the crib. This action is also preferably accentuated by bending the lower ends of the legs outwardly as shown, or otherwise arranging casters or feet g thereon outwardly beyond the transverse vertical planes of the legs. Other arrangements in which the casters or feet are offset beyond the transverse vertical planes in which the pivots c for the legs are located would also give a similar action in greater or less degree. The upper ends h of the tubular portions of the legs are adapted to engage the side bars of the bottom frame and serve as stops to prevent the legs from swinging outwardly beyond their intended upright position.

In folding the crib the end frames are pushed inwardly with sufficient force to cause the legs to swing inwardly until the bearing points of the casters or feet pass beyond positions vertically beneath the pivots c of the legs, when the casters will roll freely along the floor, thereby gradually lowering the crib down upon the upwardly swinging legs. By thus folding the end frames one at a time, first one and then the other end of the crib is lowered and the crib can be quickly and easily folded. In setting the crib up for use the reverse action takes place, the casters rolling along on the floor until the legs reach the vertical position, in which they are retained by the weight of the parts supported by the legs.

The side frames D are movably mounted to enable them to be lowered for placing a child in or taking it from the crib, and to allow them to be folded inwardly one over the other above the crib bottom before the end frames are folded. As shown for this purpose, the side frames are pivoted at their lower corners to the upright extensions a^2 of the bottom frame so as to swing either outwardly or inwardly. Preferably the ends i of the bottom rods of the side frame are pivotally supported in bearings formed by inwardly bent tongues i' punched from the side walls of said upright extensions a^2. The side frames are retained in upright position and lock the end frames in upright position by engaging the ends of the top rails of the side frames with holding devices, such, for instance, as studs k on the upper portions of the end frames adapted to enter holes in the ends of the top rails. The bottom rods of the side frames are permitted sufficient vertical movement in their bearings i' to enable the side frames to be readily engaged with and disengaged from the studs K. Springs L, Figs. 4 and 5, connected to the lower portions of the side frames and to the bottom frame pull downwardly on the side frames and prevent the accidental disengagement of the same from the studs K without hindering the ready operation of the side frames.

I claim as my invention:

1. The combination of a bottom frame, an end frame pivoted to said bottom frame to fold downwardly over said bottom frame, a leg pivoted to said bottom frame adjacent to said end frame to fold upwardly under said bottom frame, and a connecting member extending directly from a rigid part of said end frame to a rigid part of said leg and connecting said parts independently of said bottom frame whereby said leg is folded by the folding movement of said end frame, the pivot connecting said leg to said bottom frame being off-set with relation to the point of bearing of the leg on the floor whereby the weight of the parts supported by the leg tends to prevent the folding movement of said end frame and leg.

2. The combination of a bottom frame, an end frame pivoted to said bottom frame to swing downwardly over said bottom frame, legs pivoted to said bottom frame to swing upwardly under said bottom frame, and links pivoted to said end frame and to said legs whereby said legs are swung on their pivots by the movement of said end frame, said links being pivoted to said end frame and legs at points which are substantially in line with said legs when the legs are in upright supporting position.

3. The combination of a bottom frame, an end frame pivoted to said bottom frame to swing downwardly over said bottom frame, legs pivoted to said bottom frame at points offset from said legs in the direction of the length of said bottom frame to swing upwardly under said bottom frame, and links pivoted to said end frame and to said legs at points which are located substantially in line with said legs when the legs are in their upright supporting position.

4. The combination of a bottom frame, an end frame pivoted to said bottom frame to swing downwardly over said bottom frame and having pivot lugs projecting inwardly therefrom in the direction of the length of said bottom frame, legs pivoted to said bot-

tom frame to swing upwardly under the same by lugs projecting inwardly from the legs in the direction of the length of said bottom frame, and links pivoted to said legs and to said lugs on said end frame whereby said legs are swung on their pivots by the movement of said end frame.

5. The combination of a bottom frame, an end frame pivoted to said bottom frame to swing downwardly over said bottom frame, legs pivoted to said bottom frame to swing upwardly under said bottom frame, and a link pivoted to said end frame and to said legs at points located between the transverse vertical planes in which the pivotal connections for said end frame and for said legs are located.

6. The combination of a bottom frame, end frames pivoted to said bottom frame to swing downwardly toward each other, legs pivoted to said bottom frame to swing upwardly toward each other, operative connections between said end frames and said legs whereby the legs are moved by the movement of said end frames, the construction and relative arrangement of said parts being such that the weight of the parts supported by said legs tends to prevent the movement of the end frame and legs from the operative position, a side frame, and means for connecting said side frame and end frames for locking the latter in operative position.

7. The combination of a bottom frame, folding end frames connected to said bottom frame, a folding side frame connected to said bottom frame, and arranged to move vertically for engaging it with and disengaging it from holding means on said end frames, and a spring for resisting the vertical movement of said side frame and releasably retaining it in engagement with said holding means.

8. The combination of a bottom frame, legs pivoted to said bottom frame to swing upwardly beneath the bottom frame, end frames connected to said legs to move with the legs, the pivots for said legs being offset with reference to the bearing points of said legs on the floor so that the weight of the parts supported by said legs tends to prevent the movement of the legs and end frames, a folding side frame, and means for connecting said side frame with said end frames for securing the parts in operative position.

Witness my hand this 7th day of October, 1914.

WALTER C. CHAPPELL.

Witnesses:
C. W. PARKER,
C. HORNBECK.

Copies of this patent may be obtained for five cents each, by addressing the "Commissioner of Patents, Washington, D. C."