(12) INTERNATIONAL APPLICATION PUBLISHED UNDER THE PATENT COOPERATION TREATY (PCT)

(19) World Intellectual Property Organization
International Bureau

(43) International Publication Date
19 January 2012 (19.01.2012)

PCT

(10) International Publication Number
WO 2012/009175 A1

(51) International Patent Classification:
A61N 1/05 (2006.01)

(21) International Application Number:
PCT/US2011/042926

(22) International Filing Date:
5 July 2011 (05.07.2011)

(25) Filing Language: English

(26) Publication Language: English

(30) Priority Data:
61/364,509 15 July 2010 (15.07.2010) US
13/046,144 11 March 2011 (11.03.2011) US

(71) Applicant *(for all designated States except US)*: **GREATBATCH LTD.** [US/US]; 10,000 Wehrle Drive, Clarence, New York 14031 (US).

(72) Inventor; and

(75) Inventor/Applicant *(for US only)*: **GEROY, Jesse** [US/US]; 14454 Isanti Street, Ham Lake, Minnesota 55304 (US).

(74) Agent: **SCHWAPPACH, Karl G.**; STOEL RIVES LLP, 201 So. Main Street, Suite 1100, One Utah Center, Salt Lake City, Utah 84111 (US).

(81) Designated States *(unless otherwise indicated, for every kind of national protection available)*: AE, AG, AL, AM, AO, AT, AU, AZ, BA, BB, BG, BH, BR, BW, BY, BZ, CA, CH, CL, CN, CO, CR, CU, CZ, DE, DK, DM, DO, DZ, EC, EE, EG, ES, FI, GB, GD, GE, GH, GM, GT, HN, HR, HU, ID, IL, IN, IS, JP, KE, KG, KM, KN, KP, KR, KZ, LA, LC, LK, LR, LS, LT, LU, LY, MA, MD, ME, MG, MK, MN, MW, MX, MY, MZ, NA, NG, NI, NO, NZ, OM, PE, PG, PH, PL, PT, RO, RS, RU, SC, SD, SE, SG, SK, SL, SM, ST, SV, SY, TH, TJ, TM, TN, TR, TT, TZ, UA, UG, US, UZ, VC, VN, ZA, ZM, ZW.

(84) Designated States *(unless otherwise indicated, for every kind of regional protection available)*: ARIPO (BW, GH, GM, KE, LR, LS, MW, MZ, NA, SD, SL, SZ, TZ, UG, ZM, ZW), Eurasian (AM, AZ, BY, KG, KZ, MD, RU, TJ, TM), European (AL, AT, BE, BG, CH, CY, CZ, DE, DK, EE, ES, FI, FR, GB, GR, HR, HU, IE, IS, IT, LT, LU, LV, MC, MK, MT, NL, NO, PL, PT, RO, RS, SE, SI, SK, SM, TR), OAPI (BF, BJ, CF, CG, CI, CM, GA, GN, GQ, GW, ML, MR, NE, SN, TD, TG).

Published:

— *with international search report (Art. 21(3))*

(54) **Title**: TUNNELING TOOL FOR IMPLANTABLE LEADS

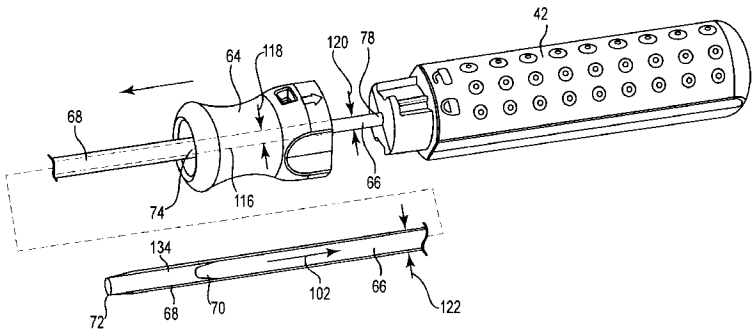

Fig. 9

(57) **Abstract**: A tunneling tool for creating a pathway for implanting a therapy delivery element in a living body. The tunneling tool includes a malleable elongated shaft having a distal end. A sheath having a lumen is slidably positioned over a portion of the shaft. A primary handle secured to proximal end of the shaft permits a user to advance and manipulate the shaft and the sheath in the living body. A secondary handle with an opening is slidably positioned on the shaft between the primary handle and the sheath. The opening has a diameter less than an outside diameter of a proximal end of the sheath. A locking mechanism releasably engages the secondary handle to the primary handle. The sheath is retained in a desired location within the living body by securing the secondary handle relative to the living body as the primary handle is used to remove the shaft from the sheath.

WO 2012/009175 A1

TUNNELING TOOL FOR IMPLANTABLE LEADS

Field

[0001] The present disclosure relates to tunneling tool for implanting therapy delivery elements, such as stimulation leads or catheters, within a living body. The tunneling tool includes a primary handle used to pull the shaft out of the living body, while a secondary handle retains an outer sheath on the shaft in the living body.

Background

[0002] Implantable neurostimulation systems have proven therapeutic in a wide variety of diseases and disorders. Pacemakers and Implantable Cardiac Defibrillators (ICDs) have proven highly effective in the treatment of a number of cardiac conditions (e.g., arrhythmias). Spinal Cord Stimulation (SCS) systems have long been accepted as a therapeutic modality for the treatment of chronic pain syndromes, and the application of tissue stimulation has begun to expand to additional applications such as angina pectoralis and incontinence. Deep Brain Stimulation (DBS) has also been applied therapeutically for well over a decade for the treatment of refractory chronic pain syndromes, and DBS has also recently been applied in additional areas such as movement disorders and epilepsy. Peripheral Nerve Stimulation (PNS) systems have demonstrated efficacy in the treatment of chronic pain syndromes and incontinence, and a number of additional applications are currently under investigation. Functional Electrical Stimulation (FES) systems such as the Freehand system by NeuroControl (Cleveland, Ohio) have been applied to restore some functionality to paralyzed extremities in spinal cord injury patients.

[0003] Each of these implantable neurostimulation systems typically includes one or more therapy delivery elements implanted at the desired stimulation site and an implantable neurostimulator, such as an implantable pulse generator (IPG), implanted remotely from the stimulation site, but coupled either directly to the therapy delivery elements or indirectly to the therapy delivery elements via one or more extensions in cases where the length of the therapy delivery elements is insufficient to reach the IPG. In some cases, the extension leads may be used to facilitate coupling of the neurostimulator, which may otherwise be incompatible with the therapy delivery elements or extension leads, thereto. Thus, electrical pulses can be delivered from the neurostimulator to the therapy delivery elements to stimulate the tissue and provide the desired efficacious therapy to the patient.

[0004] In the context of an SCS procedure, one or more therapy delivery elements are introduced through the patient's back into the epidural space under fluoroscopy, such that the electrodes carried by the leads are arranged in a desired pattern and spacing to create an electrode array. The specific procedure used to implant the therapy delivery elements will ultimately depend on the type of therapy delivery elements used. Currently, there are two types of commercially available therapy delivery elements: a percutaneous lead and a surgical lead.

[0005] A percutaneous lead includes a cylindrical body with ring electrodes, and can be introduced into contact with the affected spinal tissue through a Touhy-like needle, which passes through the skin, between the desired vertebrae, and into the epidural space above the dura layer. For unilateral pain, a percutaneous lead is placed on the corresponding lateral side of the spinal cord. For bilateral pain, a percutaneous lead is placed down the midline of the spinal cord, or two percutaneous leads are placed down the respective sides of the midline. In many cases, a stylet, such as a metallic wire, is inserted into a lumen running through the center of each of the percutaneous leads to aid in insertion of the lead through the needle and into the epidural space. The stylet gives the lead rigidity during positioning, and once the lead is positioned, the stylet can be removed after which the lead becomes flaccid.

[0006] A surgical lead has a paddle on which multiple electrodes are arranged in independent columns, and is introduced into contact with the affected spinal tissue using a surgical procedure, and specifically, a laminectomy, which involves removal of the laminar vertebral tissue to allow both access to the dura layer and positioning of the lead.

[0007] After proper placement of the therapy delivery elements at the target area of the spinal cord, the therapy delivery elements are anchored in place at an exit site to prevent movement. To facilitate the location of the implantable pulse generator away from the exit point of the therapy delivery elements, extension leads are sometimes used. In particular, the proximal ends of the therapy delivery elements, which include terminals respectively coupled to the electrodes on the therapy delivery elements, are inserted into connectors located at the distal ends of extension leads.

[0008] The proximal ends of the therapy delivery elements exiting the spinal column, or alternatively extension leads, are passed through a tunnel or pathway

formed subcutaneously along the torso of the patient to a subcutaneous pocket (typically made in the patient's abdominal or buttock area) where a implantable pulse generator is implanted. The subcutaneous pathway can be formed using a tunneling tool over which a sheath may be threaded.

[0009] The tunneling tool is often bent to a desired shape of the subcutaneous tunnel. The tunneling tool is then removed to permit the therapy delivery elements to be threaded through the sheath. The bends in the tunneling tool, however, often interfere with separation of the tunneling tool from the sheath.

Brief Summary

[0010] The present disclosure relates to tunneling tool for implanting therapy delivery elements, such as stimulation leads or catheters, within a living body. The tunneling tool includes a primary handle used to pull the shaft out of the living body, while a secondary handle retains an outer sheath on the shaft in the living body.

[0011] The tunneling tool is used to create a pathway for implanting a therapy delivery element in a living body. The tunneling tool includes a malleable elongated shaft having a distal end. A sheath having a lumen is slidably positioned over a portion of the shaft. A primary handle secured to proximal end of the shaft permits a user to advance and manipulate the shaft and the sheath in the living body. A secondary handle with an opening is slidably positioned on the shaft between the primary handle and the sheath. The opening has a diameter less than an outside diameter of a proximal end of the sheath, so that the secondary handle abuts, but is not attached to, the sheath.

[0012] In one embodiment, a locking mechanism releasably engages the secondary handle to the primary handle. The sheath is retained in a desired location within the living body by securing the secondary handle relative to the living body as the primary handle is used to remove the shaft from the sheath.

[0013] The proximal end of the sheath is preferably releasably attached to the secondary handle. In one embodiment, the locking mechanism includes a protrusion with at least one recess formed at a distal end of the primary handle. A recess in the proximal end of the secondary handle is sized to fit over the protrusion. The recess includes at least one tab sized to releasably engage with a recess in the protrusion in a locked position. The tabs preferably engage with the recess on the protrusion with a twisting-lock motion.

[0014] The present disclosure is also directed to a neurostimulation system including an implantable pulse generator and a therapy delivery element. The therapy delivery element includes a proximal end adapted to electrically couple with the implantable pulse generator and a distal end with a plurality of electrodes electrically coupled to the implantable pulse generator. An anchor is provided for securing the therapy delivery element in a desired location within a living body. The present tunneling tool is used to create a pathway for implanting the therapy delivery element in a living body. The sheath is retained in a desired location within the living body by securing the secondary handle as the primary handle is used to remove the shaft from the sheath.

[0015] The present disclosure is also directed to a method of creating a pathway for implanting a therapy delivery element in a living body. The method includes the steps of inserting distal end of a tunneling tool between skin and muscle tissue in the living body to create the pathway. A primary handle of the tunneling tool is disengaged from a secondary handle. The secondary handle engages with proximal end of a flexible sheath positioned on shaft of the tunneling tool. The secondary handle is retained relative to the living body to secure the flexible sheath located in the pathway, as the primary handle is used to remove the shaft of tunneling tool from the flexible sheath. The secondary handle is then separated from the flexible sheath. The therapy delivery element is passed through the flexible sheath. Finally, the flexible sheath is removed from the pathway. The shaft is typically shaped in a non-linear configuration before inserting into the living body.

[0016] The present disclosure is also directed to a method of implanting a neurostimulation system within a living body. The method includes the step of positioning electrodes at distal end of a therapy delivery element through a first incision site to a target location within the living body. Proximal end of the therapy delivery elements is accessible through the first incision site. The therapy delivery element is attached to the living body. A subcutaneous pocket is formed for implanting an implantable pulse generator within the living body at a second incision site. Distal end of a tunneling tool is inserted between skin and muscle tissue in the living body to create the pathway between the first and second incisions. The primary handle is disengaged from a secondary handle of the tunneling tool. The secondary handle engages with proximal end of a flexible sheath positioned on shaft of the tunneling tool. The secondary handle is retained relative to the living body to

secure the flexible sheath along the pathway, while the primary handle is grasped to remove the shaft of tunneling tool from the flexible sheath. The secondary handle is separated from the flexible sheath. The therapy delivery element is passed through the flexible sheath. The flexible sheath is then removed from the pathway, leaving the therapy delivery element in the living body. The proximal end of the therapy delivery element is electrically coupled to the implantable pulse generator.

Brief Description of the Several Views of the Drawing

[0017] Figure 1 is a schematic illustration of a therapy delivery system.

[0018] Figure 2 is a schematic illustration of an environment for a therapy delivery system in accordance with an embodiment of the present disclosure.

[0019] Figure 3 is an alternate illustration of the environment for an implantable pulse generator with a therapy delivery element in accordance with an embodiment of the present disclosure.

[0020] Figure 4 is a perspective view of a tunneling tool with a two-part handle in accordance with an embodiment of the present disclosure.

[0021] Figure 5 is a perspective view of the tunneling tool of Figure 4 with the two-part handle in a locked position in accordance with an embodiment of the present disclosure.

[0022] Figure 6 is a perspective view of the tunneling tool of Figure 4 with the two-part handle in an unlocked position in accordance with an embodiment of the present disclosure.

[0023] Figure 7 is a perspective view of a locking mechanism on a primary handle of Figure 4.

[0024] Figure 8 is a perspective view of a locking mechanism on the secondary handle of Figure 4.

[0025] Figure 9 is a perspective view of the secondary handle advancing a sheath on the tunneling tool of Figure 4 in accordance with an embodiment of the present disclosure.

[0026] Figure 10 is a schematic illustration of a sheath located in a patient in accordance with an embodiment of the present disclosure.

[0027] Figure 11 is a flow diagram of a method of using a tunneling tool in accordance with an embodiment of the present disclosure.

Detailed Description of Some Embodiments

[0028] The description that follows relates to a spinal cord stimulation (SCS) system. However, it is to be understood that the while the present disclosure lends itself well to applications in SCS, the disclosure in its broadest aspects may not be so limited. Rather, the disclosure may be used with any type of implantable therapy delivery system with one or more therapy delivery elements. For example, the present disclosure may be used as part of a pacemaker, a defibrillator, a cochlear stimulator, a retinal stimulator, a stimulator configured to produce coordinated limb movement, a cortical stimulator, a deep brain stimulator, peripheral nerve stimulator, microstimulator, or in any other neural stimulator configured to treat urinary incontinence, sleep apnea, shoulder sublaxation, headache, etc.

[0029] In another embodiment, one or more of the therapy delivery elements may be a fluid delivery conduit, such as a catheter, including an inner lumen that is placed to deliver a fluid, such as pharmaceutical agents, insulin, pain relieving agents, gene therapy agents, or the like from a fluid delivery device (e.g., a fluid reservoir and/or pump) to a respective target tissue site in a patient.

[0030] In yet another embodiment, one or more of the therapy delivery elements may be an electrical lead including one or more sensing electrodes to sense physiological parameters (e.g., blood pressure, temperature, cardiac activity, etc.) at a target tissue site within a patient. In the various embodiments contemplated by this disclosure, therapy may include stimulation therapy, sensing or monitoring of one or more physiological parameters, fluid delivery, and the like. “Therapy delivery element” includes pacing or defibrillation leads, stimulation leads, sensing leads, fluid delivery conduit, any combination thereof. “Target tissue site” refers generally to the target site for implantation of a therapy delivery element, regardless of the type of therapy.

[0031] Figure 1 illustrates a generalized therapy delivery system 10 that may be used in spinal cord stimulation (SCS), as well as other stimulation applications. The therapy delivery system 10 generally includes an implantable pulse generator 12, an implantable therapy delivery element 14, which carries an array of electrodes 18 (shown exaggerated for purposes of illustration), and an optional implantable extension lead 16. Although only one therapy delivery element 14 is shown, typically two or more therapy delivery elements 14 are used with the therapy delivery system 10.

[0032] The therapy delivery element 14 includes elongated body 40 having a proximal end 36 and a distal end 44. The elongated body 40 typically has a diameter of between about 0.03 inches to 0.07 inches and a length within the range of 30 cm to 90 cm for spinal cord stimulation applications. The elongated body 40 may be composed of a suitable electrically insulative material, such as, a polymer (e.g., polyurethane or silicone), and may be extruded from as a unibody construction.

[0033] In the illustrated embodiment, proximal end 36 of the therapy delivery element 14 is electrically coupled to distal end 38 of the extension lead 16 via a connector 20, typically associated with the extension lead 16. Proximal end 42 of the extension lead 16 is electrically coupled to the implantable pulse generator 12 via connector 22 associated with housing 28. Alternatively, the proximal end 36 of the therapy delivery element 14 can be electrically coupled directly to the connector 20.

[0034] In the illustrated embodiment, the implantable pulse generator 12 includes electronic subassembly 24 (shown schematically), which includes control and pulse generation circuitry (not shown) for delivering electrical stimulation energy to the electrodes 18 of the therapy delivery element 14 in a controlled manner, and a power supply, such as battery 26.

[0035] The implantable pulse generator 12 provides a programmable stimulation signal (e.g., in the form of electrical pulses or substantially continuous-time signals) that is delivered to target stimulation sites by electrodes 18. In applications with more than one therapy delivery element 14, the implantable pulse generator 12 may provide the same or a different signal to the electrodes 18.

[0036] Alternatively, the implantable pulse generator 12 can take the form of an implantable receiver-stimulator in which the power source for powering the implanted receiver, as well as control circuitry to command the receiver-stimulator, are contained in an external controller inductively coupled to the receiver-stimulator via an electromagnetic link. In another embodiment, the implantable pulse generator 12 can take the form of an external trial stimulator (ETS), which has similar pulse generation circuitry as an IPG, but differs in that it is a non-implantable device that is used on a trial basis after the therapy delivery element 14 has been implanted and prior to implantation of the IPG, to test the responsiveness of the stimulation that is to be provided.

[0037] The housing 28 is composed of a biocompatible material, such as for example titanium, and forms a hermetically sealed compartment containing the

electronic subassembly 24 and battery 26 are protected from the body tissue and fluids. The connector 22 is disposed in a portion of the housing 28 that is, at least initially, not sealed. The connector 22 carries a plurality of contacts that electrically couple with respective terminals at proximal ends of the therapy delivery element 14 or extension lead 16. Electrical conductors extend from the connector 22 and connect to the electronic subassembly 24.

[0038] Figure 2 illustrates the therapy delivery element 14 implanted in the epidural space 30 of a patient in close proximity to the dura, the outer layer that surrounds the spinal cord 32, to deliver the intended therapeutic effects of spinal cord electrical stimulation. The target stimulation sites may be anywhere along the spinal cord 32, such as for example proximate the sacral nerves.

[0039] Because of the lack of space near the lead exit point 34 where the therapy delivery element 14 exits the spinal column, the implantable pulse generator 12 is generally implanted in a surgically-made pocket either in the abdomen or above the buttocks, such as illustrated in Figure 3. The implantable pulse generator 12 may, of course, also be implanted in other locations of the patient's body. Use of the extension lead 16 facilitates locating the implantable pulse generator 12 away from the lead exit point 34. In some embodiments, the extension lead 16 serves as a lead adapter if the proximal end 36 of the therapy delivery element 14 is not compatible with the connector 22 of the implantable pulse generator 12, since different manufacturers use different connectors at the ends of their stimulation leads and are not always compatible with the connector 22.

[0040] As illustrated in Figure 3, the therapy delivery system 10 also may include a clinician programmer 46 and a patient programmer 48. Clinician programmer 46 may be a handheld computing device that permits a clinician to program neurostimulation therapy for patient using input keys and a display. For example, using clinician programmer 46, the clinician may specify neurostimulation parameters for use in delivery of neurostimulation therapy. Clinician programmer 46 supports telemetry (e.g., radio frequency telemetry) with the implantable pulse generator 12 to download neurostimulation parameters and, optionally, upload operational or physiological data stored by implantable pulse generator 12. In this manner, the clinician may periodically interrogate the implantable pulse generator 12 to evaluate efficacy and, if necessary, modify the stimulation parameters.

[0041] Similar to clinician programmer 46, patient programmer 48 may be a handheld computing device. Patient programmer 48 may also include a display and input keys to allow patient to interact with patient programmer 48 and the implantable pulse generator 12. The patient programmer 48 provides patient with an interface for control of neurostimulation therapy provided by the implantable pulse generator 12. For example, patient may use patient programmer 48 to start, stop or adjust neurostimulation therapy. In particular, patient programmer 48 may permit patient to adjust stimulation parameters such as duration, amplitude, pulse width and pulse rate, within an adjustment range specified by the clinician via clinician programmer 48, or select from a library of stored stimulation therapy programs.

[0042] The implantable pulse generator 12, clinician programmer 46, and patient programmer 48 may communicate via cables or a wireless communication. Clinician programmer 46 and patient programmer 48 may, for example, communicate via wireless communication with the implantable pulse generator 12 using RF telemetry techniques known in the art. Clinician programmer 46 and patient programmer 48 also may communicate with each other using any of a variety of local wireless communication techniques, such as RF communication according to the 802.11 or Bluetooth specification sets, infrared communication, e.g., according to the IrDA standard, or other standard or proprietary telemetry protocols.

[0043] Figure 3 also illustrates a general environmental that may benefit from use of a tunneling tool in accordance with an embodiment of the present disclosure. Since the implantable pulse generator 12 is located remotely from target location 50 for therapy, the therapy delivery element 14 and/or the extension lead 16 is typically routed through a pathways 52 subcutaneously formed along the torso of the patient to a subcutaneous pocket 54 where the implantable pulse generator 12 is located.

[0044] Figure 4 is a perspective view of tunneling tool 60 for creating such pathways, such as the pathway 52 of Figure 3, to rough implantable therapy delivery elements 14 and/or lead extension 16 subcutaneously from the target stimulation site 50 to the implantable implantable pulse generator 12, in accordance with an embodiment of the present disclosure. The tunneling tool 60 includes primary handle 62, secondary handle 64, malleable shaft 66, and flexible sheath 68. Distal end 70 of the shaft 66 preferably protrudes beyond distal end 72 of the flexible sheath 68 to bore through subcutaneous tissue. Proximal end 74 of the sheath 68 is engaged with, but not attached to, the secondary handle 64.

[0045] The malleable shaft 66 permits the surgeon to customize the shape of the tunneling device 60 prior to and/or during insertion of the tunneling device into the anatomy. The shape of the malleable shaft 66 may be more or less intricate, as may be required by a particular procedure. The malleable shaft 66 is preferably made of a bendable or flexible material such as stainless steel or titanium or any other suitable material or combination of materials. The malleable shaft 66 may be any suitable size in shape and is generally sized to be slightly smaller than the size or diameter of a cable or wire connected to an implant device, which is routed through a person's body. The flexible sheath 68 is preferably constructed from a fluoropolymer material.

[0046] Figures 5 and 6 illustrate operation of locking mechanism 80 that connects the secondary handle 64 to the primary handle 62 in accordance with an embodiment of the present disclosure. In the illustrated embodiment, the locking mechanism 80 is a twist-lock structure. Figure 5 illustrates the handles 62, 64 in locked position 82 and Figure 6 illustrates unlocked position 84. The locking mechanism 80 secures the two handles 62, 64 together and allows them to easily separate. The optional locking mechanism facilitates gripping both the primary and secondary handles 62, 64 while inserting the distal end 70 into the patient.

[0047] Figures 7 and 8 are perspective views of the locking mechanism 80 in accordance with an embodiment of the present disclosure. Primary handle 62 includes protrusion 90 with one or more recesses 92. Secondary handle 64 include recess 94 sized to fit over the protrusion 90. Tabs 96 formed along inside diameter 98 of the recess 94 are sized to interlock with the recesses 92 on the primary handle 62. In the preferred embodiment, the tabs 96 are located on cantilevered arms 100 molded in the secondary handle 64.

[0048] In operation, the tabs 96 are advanced into recesses 92 in direction 102. The secondary handle 64 is then rotated in direction 104, so that the tabs 96 slide over locking ridges 106 located in the recesses 9. The locking ridges 106 retain the handles 62, 64 in the locked position 82. In the preferred embodiment, the cantilevered arms 100 flex to permit the tabs 96 to pass over the locking ridges 106.

[0049] The secondary handle 64 is separated from the primary handle 62 using the reverse process. The secondary handle 64 is first rotated in direction 110 to shift the tabs 96 to the opposite side of the locking ridges 106. The secondary handle 64 is then moved in direction 112, parallel to the shaft 66.

[0050] Figure 9 illustrates the secondary handle 64 separated from the primary handle 62 and advanced along the shaft 66 in direction 112. Proximal end 78 of the shaft 66 is fixedly secured to the primary handle 62. The proximal end 74 of the sheath 68 abuts, but is not attached to, the secondary handle 64. The secondary handle 64 includes an opening 116 with diameter 118 that is greater than outside diameter 120 of the shaft 66. The diameter 118 of the opening, however, is less than outside diameter 122 of the sheath 68, so the sheath 68 advanced along the shaft 66 as the secondary handle 64 moves in the direction 112. As the secondary handle 64 is advanced in the direction 112, the shaft 66 is retracted from the sheath 68 in direction 102.

[0051] In operation, the distal end 70 of the shaft 66 is inserted into an incision of a patient. The shaft 66 can be inserted at an incision site near the therapy delivery element 14 or an incision site near the implantable pulse generator 12 is located, or an intermediate location between the two.

[0052] Once the tunneling device 60 has been inserted under the skin, it is directed, usually between the skin and muscle tissue, to the target region within the body. Preferably, the distal end 70 of the shaft 66 is blunt in order to inhibit damage to sensitive tissue such as nerves. For example, the blunt distal end minimizes coring of tissue as the tunneling device 60 is moved through the anatomy.

[0053] The shaft 66 and sheath 68 may be bent by the surgeon, either before or during insertion, to facilitate forming the pathway 52 to the desired location. The distal end 70 of the shaft 66 bores through the tissue to the desired target site by the force of the surgeon pushing the tool 60 into the patient.

[0054] Once the distal end 70 of the shaft 66 and distal end 72 of the sheath 68 are at the target location, the surgeon rotates the secondary handle 64 in direction 110 to separate the two handles 62, 64. The surgeon grasps the handle 62 to withdraw the shaft 66 from the patient, while simultaneously holding the secondary handle 64 to maintain the sheath 68 in the desired location within the pathway 52. The shaft 66 is completely removed from the sheath 68, leaving the hollow sheath 68 in place inside the patient. The secondary handle 64 is separated from the sheath 68.

[0055] Figure 10 illustrates the sheath 68 extending into the patient along the pathway 52, with the shaft 66 removed. The shaft 66 is optionally configured in a non-linear shape corresponding to the pathway 52 before or during insertion into the

patient. The sheath 68 extends from incision site 130 near where the implantable pulse generator 12 will be implanted to incision site 132 near the therapy delivery element 14. Proximal end 74 of the sheath 68 is accessible at incision site 130 and distal end 72 is accessible near incision site 132. The secondary handle 64 has already been removed.

[0056] In one embodiment, the surgeon inserts proximal end 36 of the therapy delivery elements 14 or proximal end 42 of the lead extension 16 (see Figure 1) into lumen 134 (see Figure 9) of the sheath 68 through distal end 72. Once the therapy delivery elements 14 are in place, the surgeon then grasps proximal end 74 of the sheath 68 and pulls it from the patient, leaving the therapy delivery elements 14 in the subcutaneous pathway 52. Proximal end 36 or 42 is then electrically coupled to the implantable pulse generator 12, as illustrated in Figure 3.

[0057] In an alternate embodiment, lead extension 16 is inserted into the lumen 134 of the sheath 68 from either end 72, 74. The surgeon has the option to remove the sheath 68 by pulling either end 72, 74. Once the sheath 68 is removed, distal end 38 of the lead extension 16 attached to the therapy delivery element 14 and the proximal end 42 of the lead extension 16 is attached to the implantable pulse generator 12.

[0058] Figure 11 is a flow diagram of a method of implanting a neurostimulation system within a living body in accordance with an embodiment of the present disclosure. Electrodes 18 at a distal end 44 of a therapy delivery element 14 are inserted through a first incision site 132 to a target location within the living body (150). Proximal ends 36 of the therapy delivery elements 14 are accessible at the incision site 130 (152). The surgeon attaches the therapy delivery element 14 to the patient's tissue, such as for example, using staples or an anchor, near the target location (154). A subcutaneous pocket 54 for implanting an implantable pulse generator 12 is formed within the living body through a second incision site 130 (156). Distal end 70 of the tunneling tool 60 is inserted under the skin between the skin and muscle tissue to create the pathway 52 between the incision sites 130, 132 (158). Primary handle 62 is disengaged from the secondary handle 64 (160). The primary handle 62 and the attached shaft 66 are removed from the sheath 68 while the secondary handle 64 retains the sheath 68 in the pathway 52 (162). The secondary handle 64 is separated from the sheath 68 (164). The therapy delivery element 14 (or an extension thereof) is passed through lumen 134 in the sheath 68

(166). The sheath 68 is then removed from the patient (168). The proximal end 36 of the therapy delivery element 14 is electrically coupled to the implantable pulse generator 12 and the implantable pulse generator 12 is then implanted in the subcutaneous pocket 54 (170).

[0059] Where a range of values is provided, it is understood that each intervening value, to the tenth of the unit of the lower limit unless the context clearly dictates otherwise, between the upper and lower limit of that range and any other stated or intervening value in that stated range is encompassed within this disclosure. The upper and lower limits of these smaller ranges which may independently be included in the smaller ranges is also encompassed within the disclosure, subject to any specifically excluded limit in the stated range. Where the stated range includes one or both of the limits, ranges excluding either both of those included limits are also included in the disclosure.

[0060] Unless defined otherwise, all technical and scientific terms used herein have the same meaning as commonly understood by one of ordinary skill in the art to which this disclosure belongs. Although any methods and materials similar or equivalent to those described herein can also be used in the practice or testing of the various methods and materials are now described. All patents and publications mentioned herein, including those cited in the Background of the application, are hereby incorporated by reference to disclose and described the methods and/or materials in connection with which the publications are cited.

[0061] The publications discussed herein are provided solely for their disclosure prior to the filing date of the present application. Nothing herein is to be construed as an admission that the present disclosure is not entitled to antedate such publication by virtue of prior invention. Further, the dates of publication provided may be different from the actual publication dates which may need to be independently confirmed.

[0062] Other embodiments are possible. Although the description above contains much specificity, these should not be construed as limiting the scope of the disclosure, but as merely providing illustrations of some of the presently preferred embodiments. It is also contemplated that various combinations or sub-combinations of the specific features and aspects of the embodiments may be made and still fall within the scope of this disclosure. It should be understood that various features and aspects of the disclosed embodiments can be combined with or

substituted for one another in order to form varying modes disclosed. Thus, it is intended that the scope of at least some of the present disclosure should not be limited by the particular disclosed embodiments described above.

[0063] Thus the scope of this disclosure should be determined by the appended claims and their legal equivalents. Therefore, it will be appreciated that the scope of the present disclosure fully encompasses other embodiments which may become obvious to those skilled in the art, and that the scope of the present disclosure is accordingly to be limited by nothing other than the appended claims, in which reference to an element in the singular is not intended to mean “one and only one” unless explicitly so stated, but rather “one or more.” All structural, chemical, and functional equivalents to the elements of the above-described preferred embodiment that are known to those of ordinary skill in the art are expressly incorporated herein by reference and are intended to be encompassed by the present claims. Moreover, it is not necessary for a device or method to address each and every problem sought to be solved by the present disclosure, for it to be encompassed by the present claims. Furthermore, no element, component, or method step in the present disclosure is intended to be dedicated to the public regardless of whether the element, component, or method step is explicitly recited in the claims.

What is claimed is:

1. A tunneling tool for creating a pathway for implanting a therapy delivery element in a living body, the tunneling tool comprising:

a malleable elongated shaft having a distal end;

a sheath having a lumen slidably positioned over a portion of the shaft;

a primary handle secured to proximal end of the shaft that permits a user to advance and manipulate the shaft and the sheath in the living body; and

a secondary handle with an opening slidably positioned on the shaft between the primary handle and the sheath, the opening having a diameter less than an outside diameter of a proximal end of the sheath so that the secondary handle abuts, but is not attached to, the sheath.

2. The tunneling tool of claim 1 comprising a locking mechanism releasably engaging the secondary handle to the primary handle, wherein the sheath is retained in a desired location within the living body by retaining the secondary handle relative to the living body, as the primary handle is used to remove the shaft from the sheath.

3. The tunneling tool of claim 1 wherein locking mechanism comprises:

a protrusion formed at a distal end of the primary handle, the protrusion including at least one recess in the protrusion; and

a recess in a proximal end of the secondary handle sized to fit over the protrusion, the recess including at least one tab sized to releasably engage with a recess in the protrusion in a locked position.

4. The tunneling tool of claim 3 wherein the tabs engage with the recess on the protrusion with a twisting motion.

5. The tunneling tool of claim 1 wherein the shaft comprises a non-linear configuration.

6. A neurostimulation system comprising:

an implantable pulse generator;

a therapy delivery element comprising a proximal end adapted to electrically couple with the implantable pulse generator and a distal end with a plurality of electrodes electrically coupled to the implantable pulse generator;

an anchor for securing the therapy delivery element in a desired location within a living body;

a tunneling tool for creating a pathway for implanting the therapy delivery element in a living body, the tunneling tool comprising;

a malleable elongated shaft having a distal end;

a sheath having a lumen slidably positioned over a portion of the shaft;

a primary handle secured to proximal end of the shaft that permits a user to advance and manipulate the shaft and the sheath in the living body;

a secondary handle with an opening slidably positioned on the shaft between the primary handle and the sheath, the opening having a diameter less than an outside diameter of a proximal end of the sheath, so that the secondary handle abuts, but is not attached to, the sheath; and

a locking mechanism releasably engaging the secondary handle to the primary handle, wherein the sheath is retained in a desired location within the living body by retaining the secondary handle relative to the living body, as the primary handle is used to remove the shaft from the sheath.

7. A method of creating a pathway for implanting a therapy delivery element in a living body, the method comprising the steps of:

inserting a distal end of a tunneling tool between skin and muscle tissue in the living body to create the pathway;

disengaging a primary handle from a secondary handle of the tunneling tool, the secondary handle engaging a proximal end of a flexible sheath positioned on a shaft of the tunneling tool;

holding the secondary handle relative to the living body to secure the flexible sheath located in the pathway;

grasping the primary handle to remove the shaft of tunneling tool from the flexible sheath;

separating the secondary handle from the flexible sheath;

passing the therapy delivery element through the flexible sheath; and

removing the flexible sheath from the pathway.

8. The method of claim 7 comprising the step of disengaging a locking mechanism releasably engaging the secondary handle to the primary handle.

9. The method of claim 7 comprising the step of shaping the shaft before inserting into the living body.

10. The method of claim 7 wherein proximal end of the sheath is releasably attached to the secondary handle.

11. The method of claim 7 wherein proximal end of the sheath is located in a recess in the secondary handle.

12. The method of claim 7 comprising the step of sliding an opening in the secondary handle along the shaft as the shaft is removed from the sheath.

13. A method of implanting a neurostimulation system within a living body, the method comprising the steps of:

positioning electrodes at a distal end of a therapy delivery element through a first incision site to a target location within the living body;

accessing a proximal end of the therapy delivery elements at the first incision site;

attaching the therapy delivery element to the living body;

forming a subcutaneous pocket for implanting an implantable pulse generator within the living body through a second incision site;

inserting a distal end of a tunneling tool between skin and muscle tissue in the living body to create the pathway between the first and second incisions;

disengaging a primary handle from a secondary handle of the tunneling tool, the secondary handle engaged with a proximal end of a flexible sheath positioned on a shaft of the tunneling tool;

holding the secondary handle relative to the living body to secure the flexible sheath along the pathway;

grasping the primary handle to remove the shaft of the tunneling tool from the flexible sheath;

separating the secondary handle from the flexible sheath;

passing the therapy delivery element through the flexible sheath;

removing the flexible sheath from the pathway; and

electrically coupling the proximal end of the therapy delivery element to the implantable pulse generator.

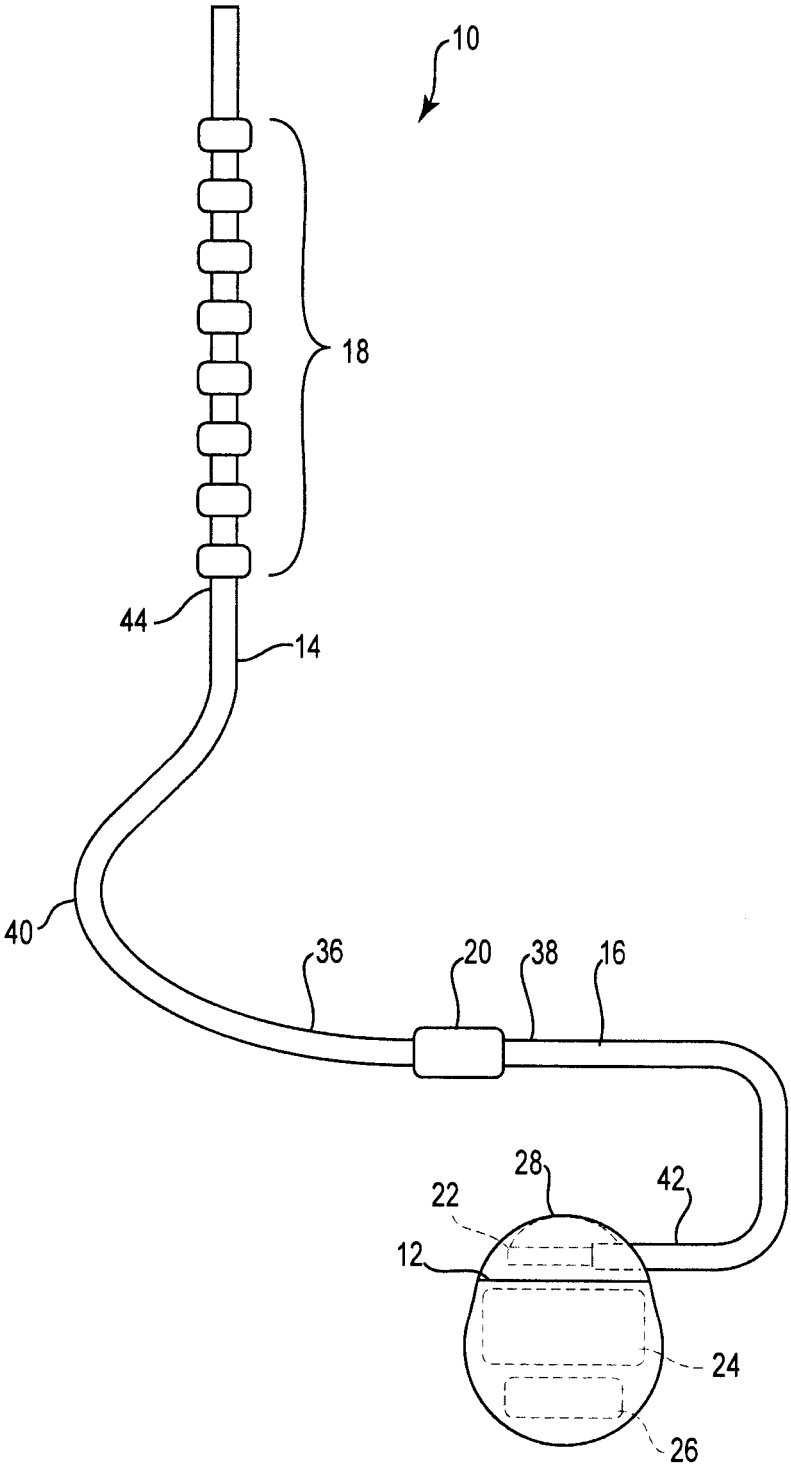

Fig. 1

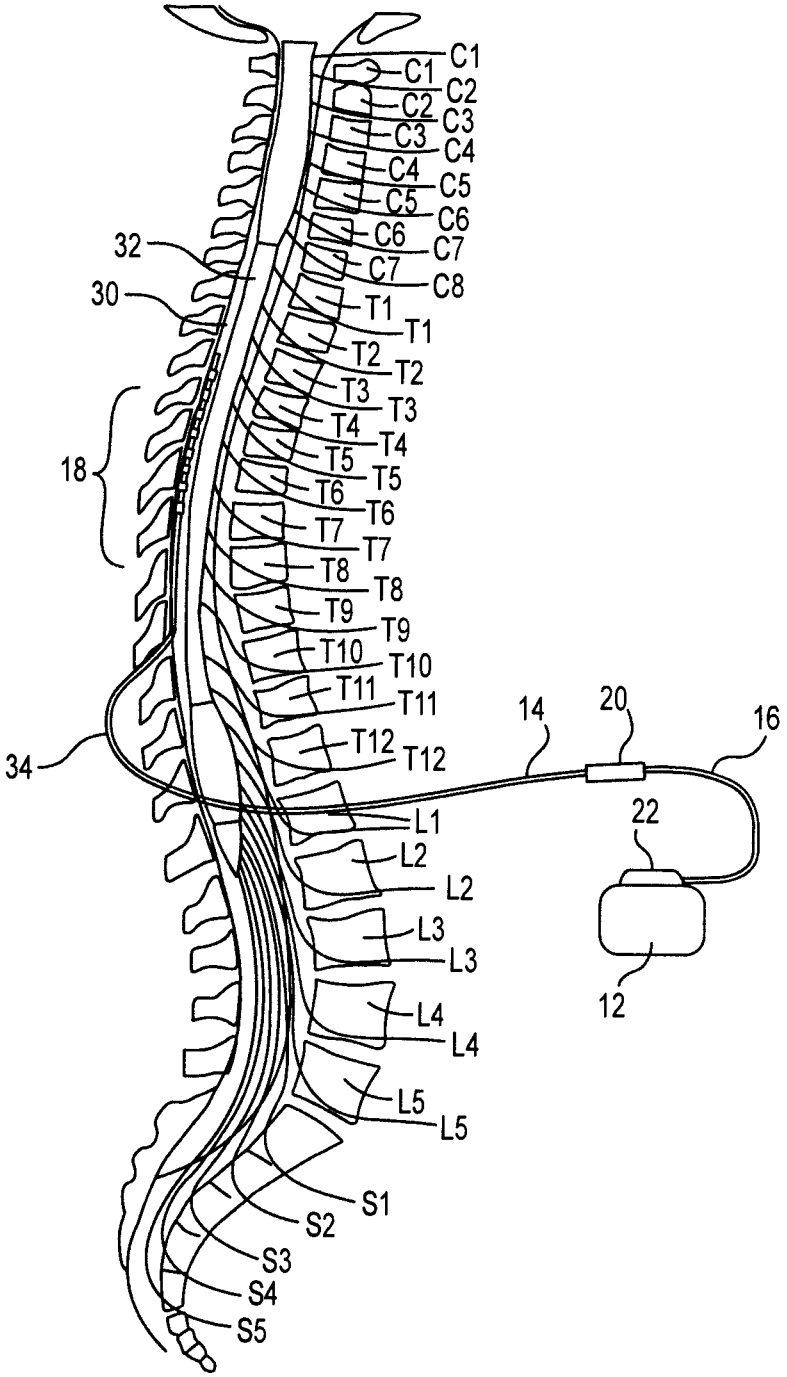
C1
C2
C3
C4
C5
C6
C7
C8
T1
T2
T3
T4
T5
T6
T7
T8
T9
T10
T11
T12
L1
L2
L3
L4
L5
S1
S2
S3
S4
S5
32
30
18
34
14
20
16
22
12

Fig. 2

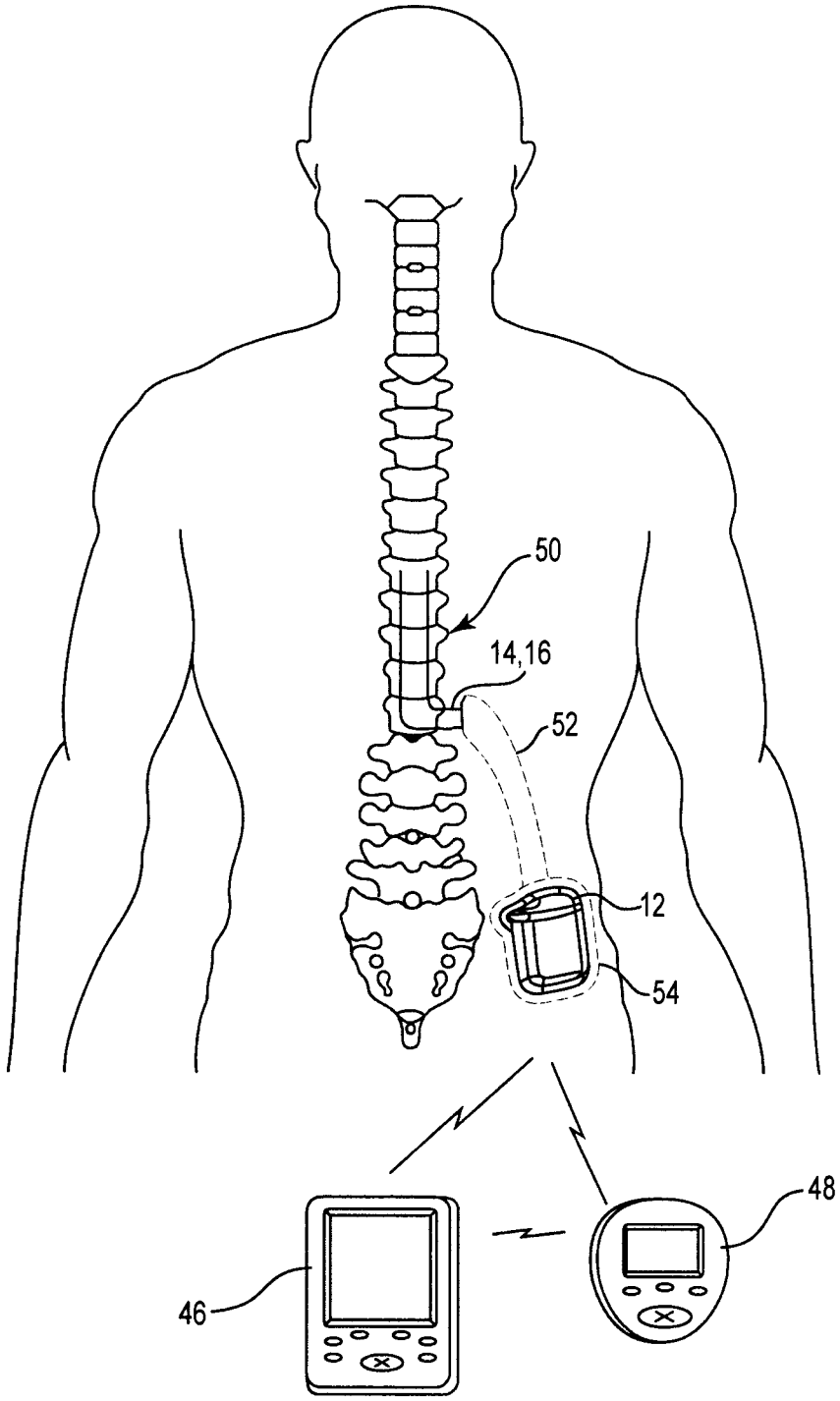

Fig. 3

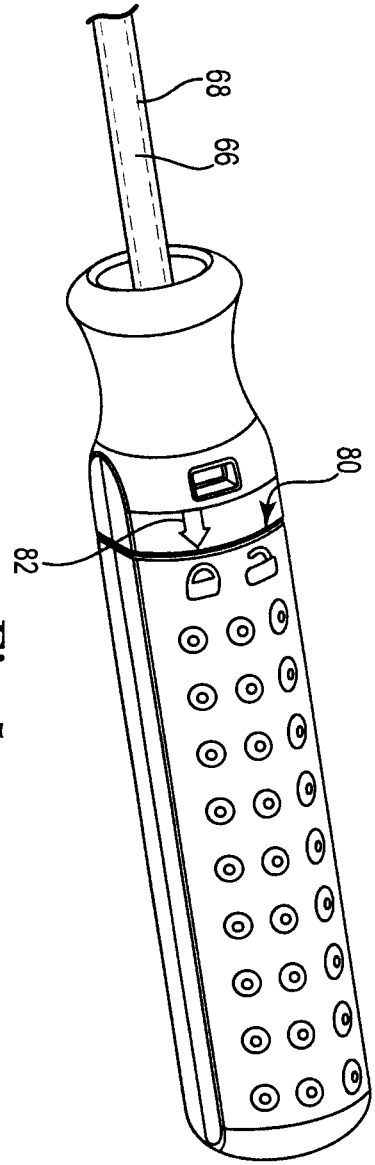

Fig. 5

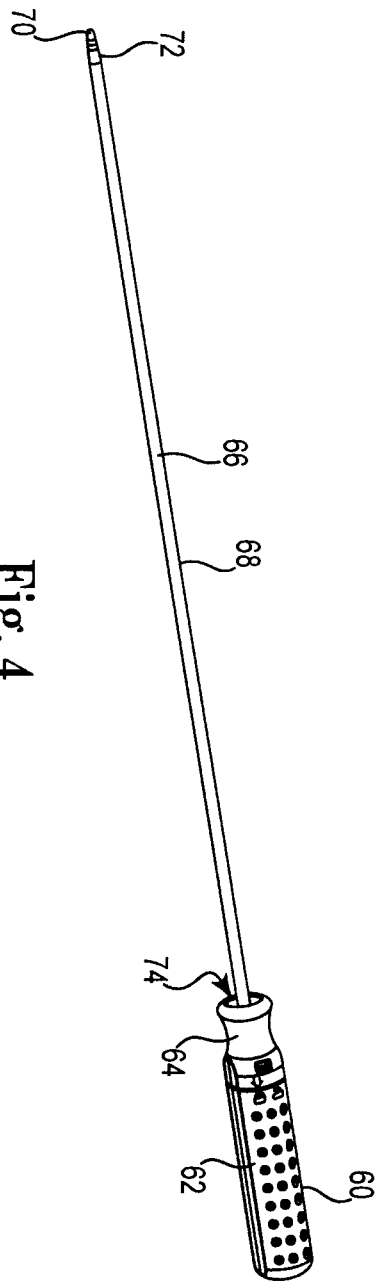

Fig. 4

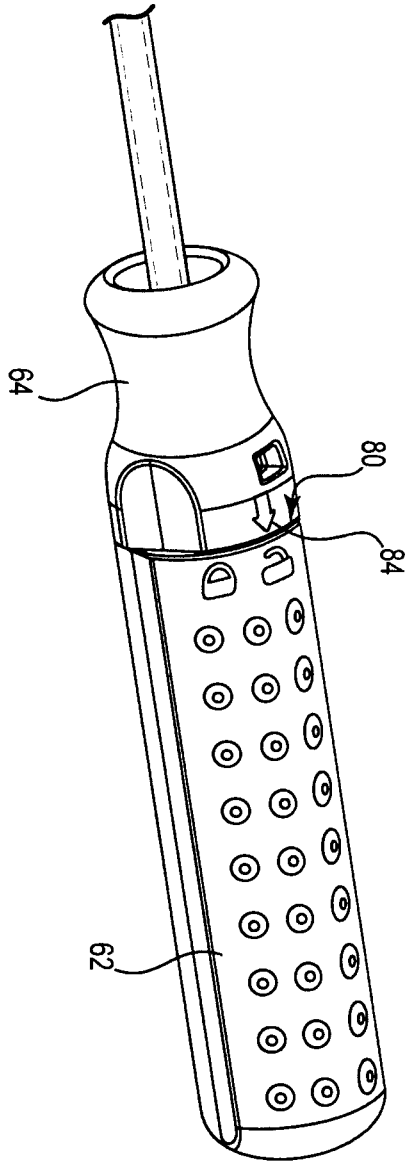

Fig. 6

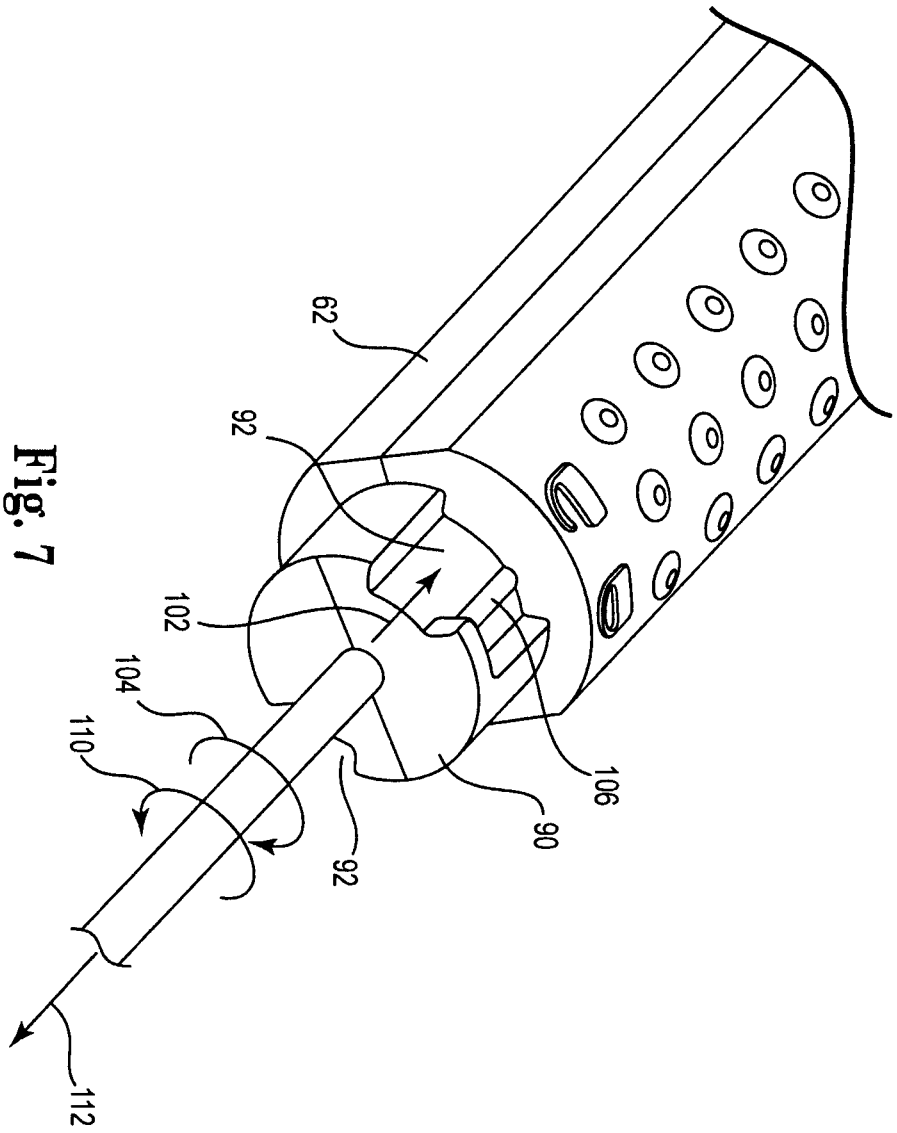

Fig. 7

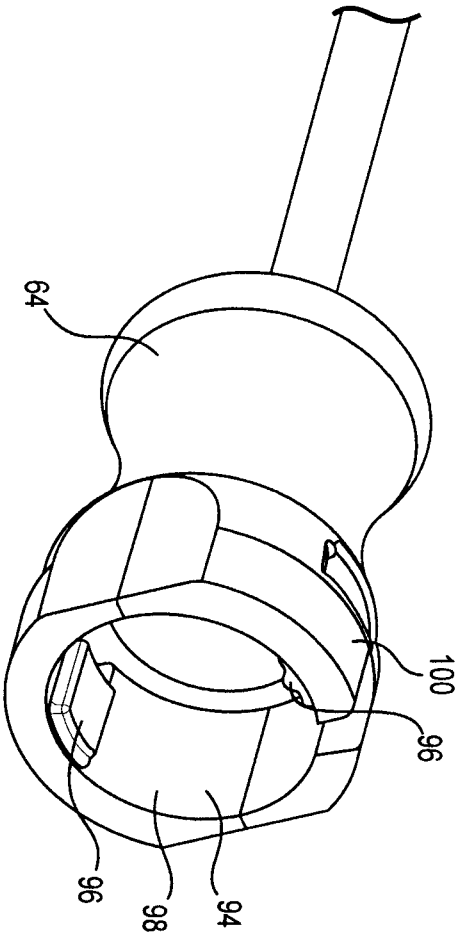

Fig. 8

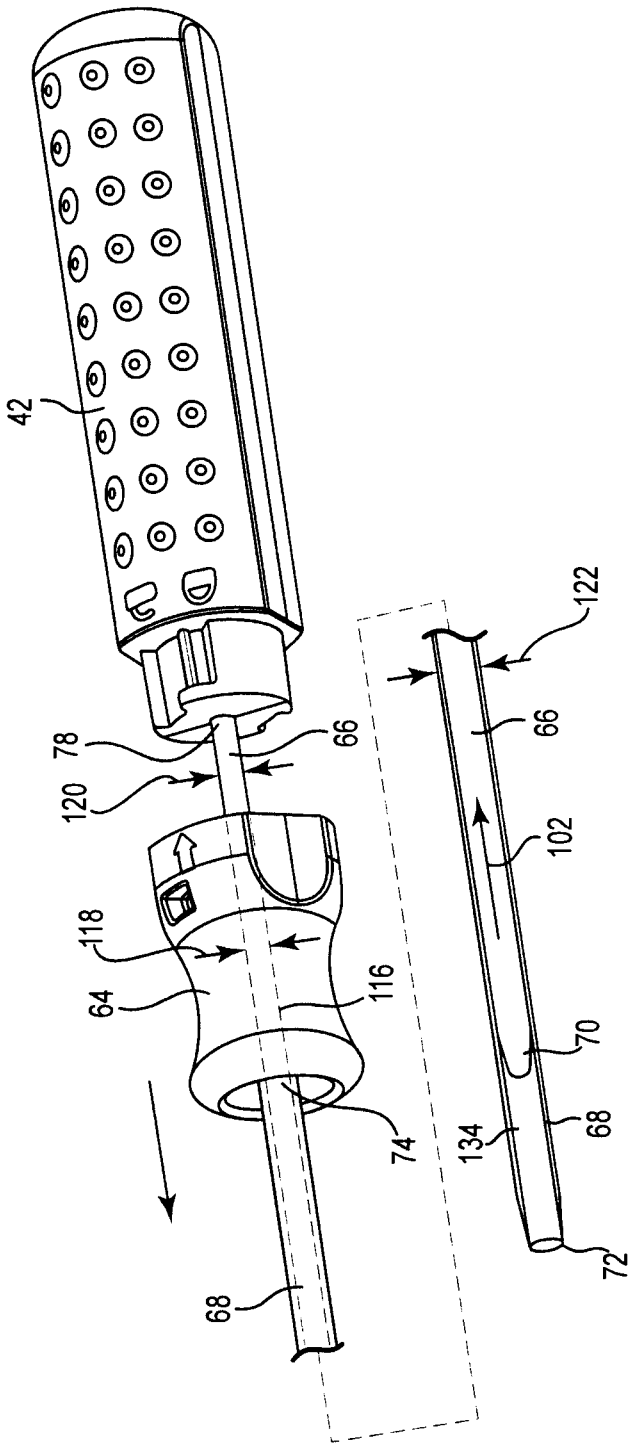

Fig. 9

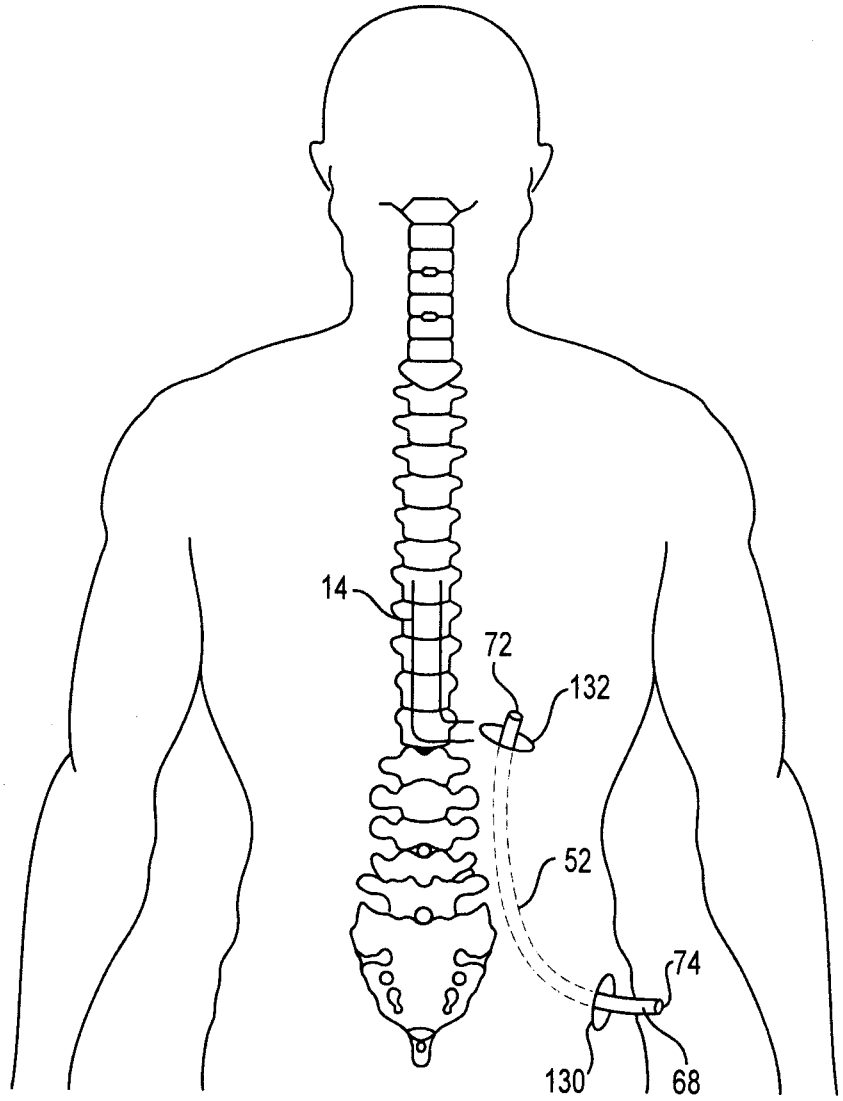

Fig. 10

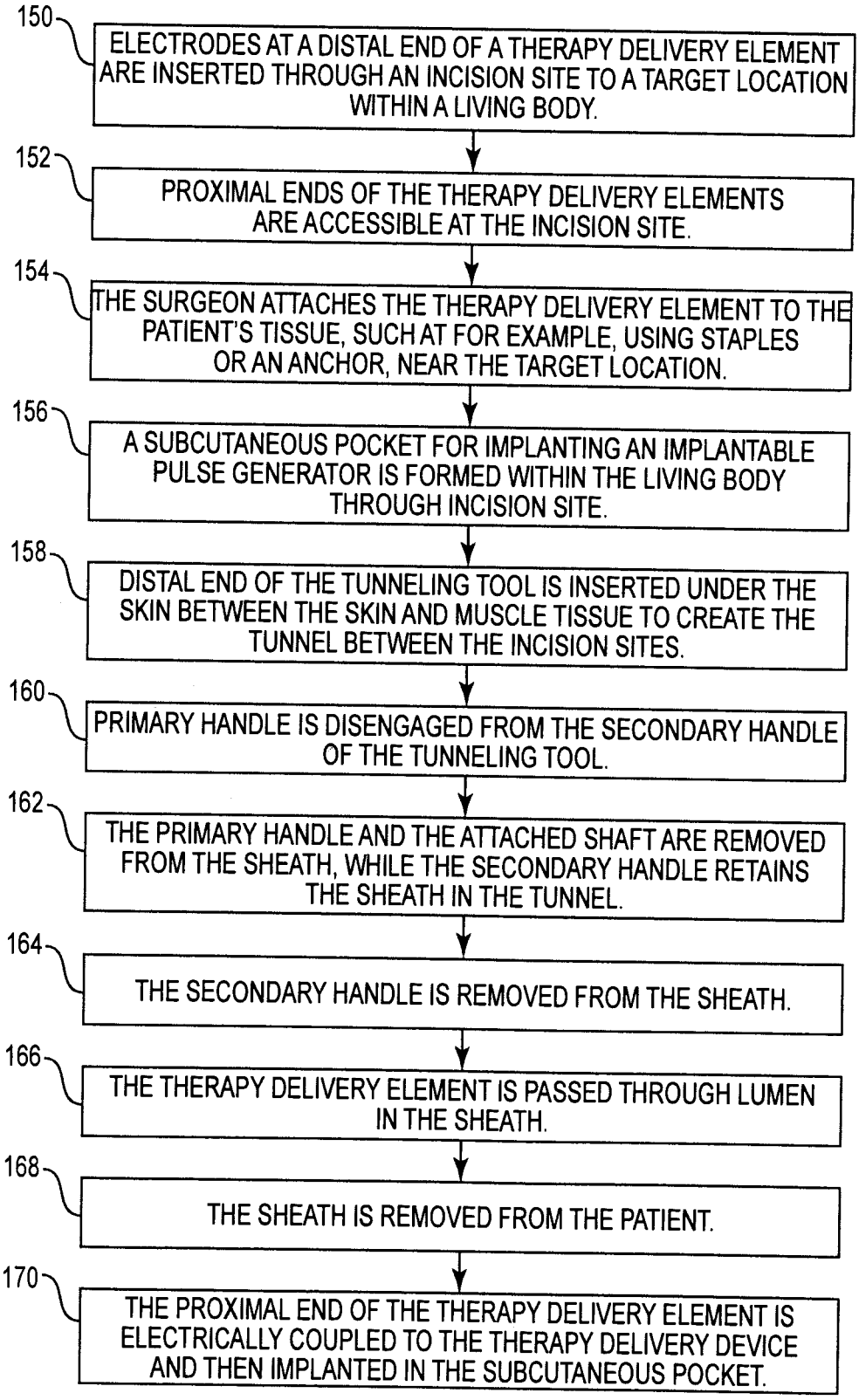
150
ELECTRODES AT A DISTAL END OF A THERAPY DELIVERY ELEMENT ARE INSERTED THROUGH AN INCISION SITE TO A TARGET LOCATION WITHIN A LIVING BODY.
152
PROXIMAL ENDS OF THE THERAPY DELIVERY ELEMENTS ARE ACCESSIBLE AT THE INCISION SITE.
154
THE SURGEON ATTACHES THE THERAPY DELIVERY ELEMENT TO THE PATIENT'S TISSUE, SUCH AT FOR EXAMPLE, USING STAPLES OR AN ANCHOR, NEAR THE TARGET LOCATION.
156
A SUBCUTANEOUS POCKET FOR IMPLANTING AN IMPLANTABLE PULSE GENERATOR IS FORMED WITHIN THE LIVING BODY THROUGH INCISION SITE.
158
DISTAL END OF THE TUNNELING TOOL IS INSERTED UNDER THE SKIN BETWEEN THE SKIN AND MUSCLE TISSUE TO CREATE THE TUNNEL BETWEEN THE INCISION SITES.
160
PRIMARY HANDLE IS DISENGAGED FROM THE SECONDARY HANDLE OF THE TUNNELING TOOL.
162
THE PRIMARY HANDLE AND THE ATTACHED SHAFT ARE REMOVED FROM THE SHEATH, WHILE THE SECONDARY HANDLE RETAINS THE SHEATH IN THE TUNNEL.
164
THE SECONDARY HANDLE IS REMOVED FROM THE SHEATH.
166
THE THERAPY DELIVERY ELEMENT IS PASSED THROUGH LUMEN IN THE SHEATH.
168
THE SHEATH IS REMOVED FROM THE PATIENT.
170
THE PROXIMAL END OF THE THERAPY DELIVERY ELEMENT IS ELECTRICALLY COUPLED TO THE THERAPY DELIVERY DEVICE AND THEN IMPLANTED IN THE SUBCUTANEOUS POCKET.

Fig. 11

INTERNATIONAL SEARCH REPORT

International application No.
PCT/US2011/042926

A. CLASSIFICATION OF SUBJECT MATTER
IPC(8) - A61N 1/05 (2011.01)
USPC - 604/164.01
According to International Patent Classification (IPC) or to both national classification and IPC

B. FIELDS SEARCHED

Minimum documentation searched (classification system followed by classification symbols)
IPC(8) - A61N 1/05 (2011.01)
USPC - 604/164.01, 165, 165.01, 263, 264, 528; 607/119, 122

Documentation searched other than minimum documentation to the extent that such documents are included in the fields searched

Electronic data base consulted during the international search (name of data base and, where practicable, search terms used)
PatBase and Google Patents

C. DOCUMENTS CONSIDERED TO BE RELEVANT

Category*	Citation of document, with indication, where appropriate, of the relevant passages	Relevant to claim No.
Y	US 5,279,570 A (DOMBROWSKI et al) 18 January 1994 (18.01.1994) entire document	1-13
Y	US 3,630,192 A (JAMSHIDI) 28 December 1971 (28.12.1971) entire document	1-13
Y	US 4,793,363 A (AUSHERMAN et al) 27 December 1988 (27.12.1988) entire document	2-4, 6-13
Y	US 5,300,106 A (DAHL et al) 05 April 1994 (05.04.1994) entire document	5
Y	US 6,605,094 B1 (MANN et al) 12 August 2003 (12.08.2003) entire document	6, 13
Y	US 2008/0009749 A1 (DELIANIDES et al) 10 January 2008 (10.01.2008) entire document	9

☐ Further documents are listed in the continuation of Box C. ☐

* Special categories of cited documents:
"A" document defining the general state of the art which is not considered to be of particular relevance
"E" earlier application or patent but published on or after the international filing date
"L" document which may throw doubts on priority claim(s) or which is cited to establish the publication date of another citation or other special reason (as specified)
"O" document referring to an oral disclosure, use, exhibition or other means
"P" document published prior to the international filing date but later than the priority date claimed
"T" later document published after the international filing date or priority date and not in conflict with the application but cited to understand the principle or theory underlying the invention
"X" document of particular relevance; the claimed invention cannot be considered novel or cannot be considered to involve an inventive step when the document is taken alone
"Y" document of particular relevance; the claimed invention cannot be considered to involve an inventive step when the document is combined with one or more other such documents, such combination being obvious to a person skilled in the art
"&" document member of the same patent family

Date of the actual completion of the international search	Date of mailing of the international search report
28 October 2011	02 NOV 2011
Name and mailing address of the ISA/US Mail Stop PCT, Attn: ISA/US, Commissioner for Patents P.O. Box 1450, Alexandria, Virginia 22313-1450 Facsimile No. 571-273-3201	Authorized officer: Blaine R. Copenheaver PCT Helpdesk: 571-272-4300 PCT OSP: 571-272-7774