Jan. 13, 1970 L. R. SMITH 3,489,414

CONTAINER WITH CUBE-CARD ALIGNING AND READ OUT NECK

Filed March 21, 1966 2 Sheets-Sheet 1

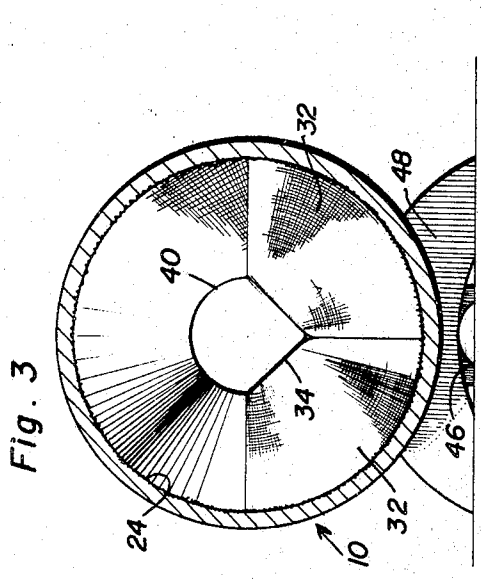

Fig. 3

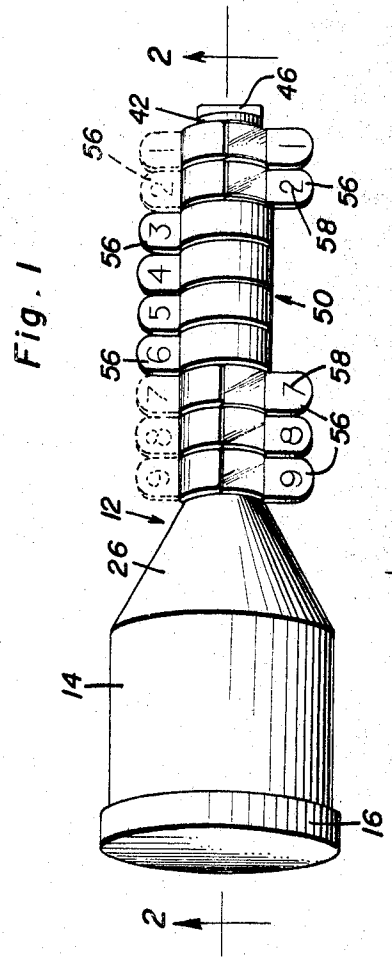

Fig. 1

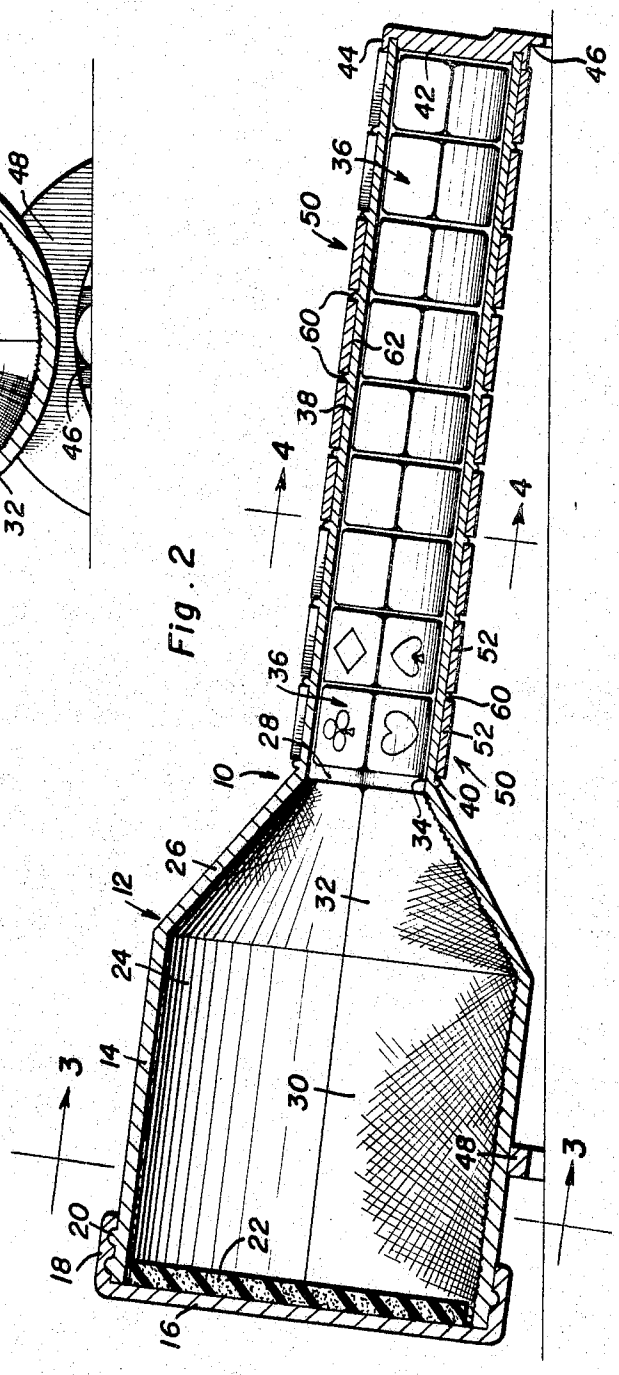

Fig. 2

Leo R. Smith INVENTOR.

BY Clarence A. O'Brien and Harvey B. Jacobson Attorneys

Jan. 13, 1970 L. R. SMITH 3,489,414

CONTAINER WITH CUBE-CARD ALIGNING AND READ OUT NECK

Filed March 21, 1966 2 Sheets-Sheet 2

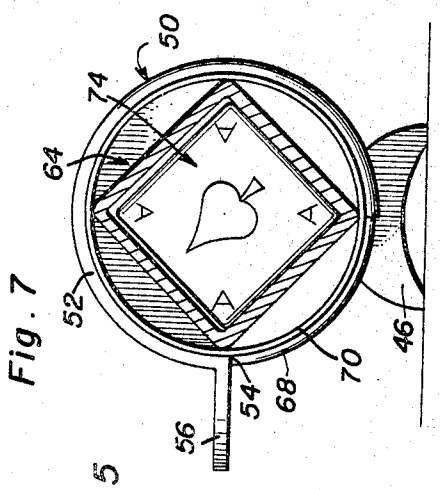

Fig. 7

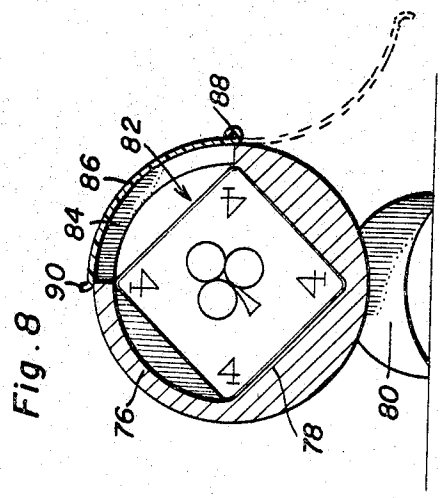

Fig. 8

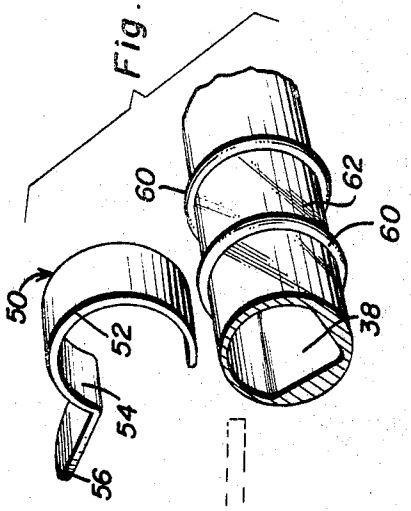

Fig. 5

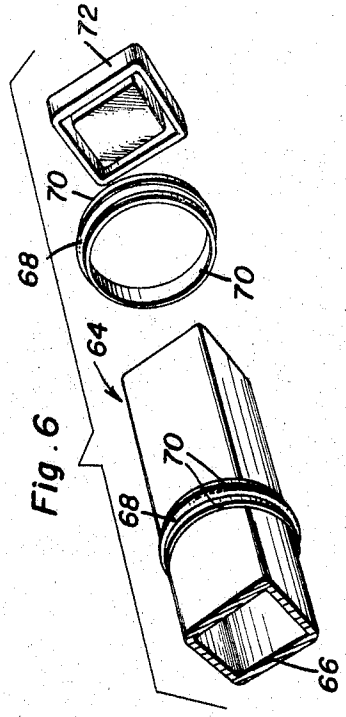

Fig. 6

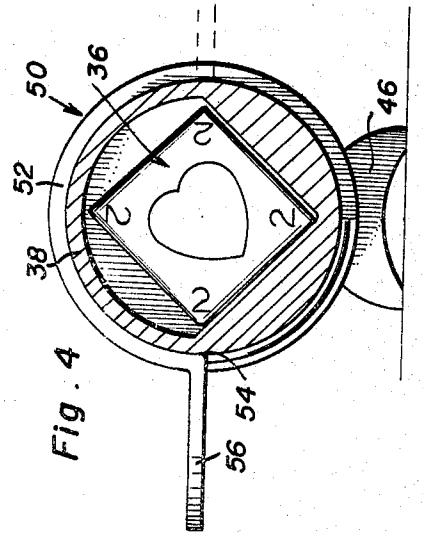

Fig. 4

Leo R. Smith
INVENTOR.

BY Clarence A. O'Brien and Harvey B. Jacobson
Attorneys

United States Patent Office 3,489,414
Patented Jan. 13, 1970

3,489,414

CONTAINER WITH CUBE-CARD ALIGNING AND READ OUT NECK

Leo R. Smith, 1203 28th, Fort Pierce, Fla. 33450

Filed Mar. 21, 1966, Ser. No. 535,969
Int. Cl. A63f 9/04
U.S. Cl. 273—145 2 Claims

ABSTRACT OF THE DISCLOSURE

A prescribed number of cube-cards are initially confined for shuffling in the mixing chamber of a hollow head. They can be lined up with and shifted one by one into a keying track provided in an axial receiving neck. When lodged and stacked in the captive neck they are readied for read out viewing. Normally closed suitably numbered covers encompass the neck and can be selectively opened to uncover card pips on the cube-cards. When playing stud poker, five cube-cards are exposed and constitute the user's playing hand.

This invention relates to a new and improved manually usable self-contained and ready-to-use card-type gaming device which is expressly designed and adapted for playing poker but which also lends itself for practical use when playing other card games such as bridge, hearts, rummy and the like.

Briefly, the device is characterized by a simple holder or container for a plurality of game playing elements, more particularly, dice-like cubes whose faces are provided with playing card symbols or pips (instead of spots). These pips are systematically arranged and properly worked out to represent a pack or deck of fifty-four (54) cards. The holder or container comprises two significant components, namely, a hollow head and a complemental suitably elongated tubular neck which is oriented and coordinated with the head. The hollow portion of the head constitutes a shaking and mixing chamber for the confined telltale cubes and the communicating hollow portion of the handling neck constitutes and provides a receiver which slidingly but non-rotatably receives and temporarily "keys" the cubes in stacked viewable relationship. The neck may be wholly transparent or simply provided with a lengthwise transparent strip-like window (magnified or not). This window and cubes aligned therewith are normally concealed by selectively openable and closable individual covers.

These covers may comprise pivoted segmental bands providing lid-like shutters or, alternatively, may comprise split ring-like bands provided with radial band operating finger-tabs. These tabs and shutters each have a number displayed thereon, each number being distinct and different. In the form of the invention shown the numbers are consecutive and range from 1 to 9. These numbers are plainly visible to all players and each number represents an unknown card in the deck or pack. In actual play, the dealer chooses the number which shows the card to be played, just as he would deal a hand from a deck of cards. The difference herein is that each player shuffles his own "cards" and has nine possible ones to choose from and to reveal a five (5) card-tube poker hand, for example.

As will be hereinafter more clearly understood the unique cube-card container and holder is such in construction that it functions to accomplish a novel result, namely, to contain the card-type cubes when not in play, to shuffle the cubes within the confines of the mixing chamber when in play, and to permit them to be transferred by gravity through a suitable delivery chute and restricted discharge opening and distributively trapped in

the receiver portion of the display neck, whereby to be properly poised for viewing, contingent on the choice and selective use of the coacting covers. To accomplish the above result, the holder is positioned upright with the capped or closed end of the mixing head or chamber facing down. The user then shakes the cube containing chamber as desired for a fresh shuffle. He then gently reverses or turns the device upside-down. This step causes the cubes to be piloted one behind the other for stacked use in the window-equipped neck or receiver.

The mixing chamber can be either square or round with the interior surfaces either smooth or milled and roughened. The attachable and detachable screw-cap at the basal or large end of the hollow head or chamber is interiorly covered with a cushioned pad or bumper to minimize shock and sound. The entire neck can be made of clear magnified transparent material, or one-half or one-quarter of the neck can be, according to the manufacturer, fashioned into a lengthwise strip-like suitably proportioned viewing window for better coaction with the hand manipulated covers.

The bottom half-portion of the neck features a V-shaped interior trough which provides a cube gliding and racking track. Then, too, the bottom half-portion of the chamber embodies a shunting guide which gradually narrows and merges into a V-shaped restriction at the juncture of the piloting funnel and intake end of the track-equipped neck.

In addition, the head or mixing chamber is provided with a foot-like rest which cooperates with a similar suitably aligned foot-like rest at the terminal end of the restricted neck. These rests are thus adapted to permit the device to be placed in a significant properly inclined plane atop a table or the like when the device is positioned in front of the user for selective use of the covers and for deciding on the five card-cubes which are to make up his chosen card hand.

These together with other objects and advantages which will become subsequently apparent reside in the details of construction and operation as more fully hereinafter described and claimed, reference being had to the accompanying drawings forming a part hereof, wherein like numerals refer to like parts throughout, and in which:

FIGURE 1 is a view in top plan of a gaming device constructed in accordance with the principles of the present invention and which shows the selectively usable longitudinally arranged cover means, more particularly, tab-equipped split bands and how they are mounted and used on and in association with the viewing windows of the cube-trapping and stacking neck;

FIGURE 2 is a central longitudinal sectional view on an enlarged scale taken on the plane of the section line 2—2 of FIGURE 1;

FIGURE 3 is a cross-section on the vertical section line 3—3 of FIGURE 2;

FIGURE 4 is a similar cross-section but taken on the plane of the section line 4—4 of FIGURE 2;

FIGURE 5 is a fragmentary perspective view showing a portion of the track and bead-equipped neck or receiver and one of the split band covers detached;

FIGURE 6 is an exploded perspective view showing a modification wherein the neck instead of being cylindrical in cross-section is square in cross-section;

FIGURE 7 is a cross-sectional view similar to FIGURE 4 but showing the square neck in use; and

FIGURE 8 is a similar cross-section which shows the cylindrical-type neck and illustrates a modified hingedly mounted lid or cover which may, within the purview of the invention, be used.

The elongated holder or container unit is denoted generally by the numeral 10 in FIGS. 2 and 3. It is to be

pointed out here that it is within the purview of the invention to construct this unit from one piece of moldable plastic or equivalent material and to make it full-size, as suggested, for table use or on a relatively smaller scale for pocket-size use. In either event, the coacting component parts will be the same in construction and association. That part of the holder or unit which is denoted generally at **12** comprises a hollow head and while this head may be of non-circular cross-section it is preferably of the cross-sectional shape shown and accordingly includes a cylindrical body portion **14**, the forward end of which is open but is normally closed by a readily attachable and detachable screw-cap **16**, that is a cap which has a screw-threaded rim **18** screwed on threads **20** provided therefor. The interior surface of this cap is provided with a sponge-like or equivalent cushioned shock and sound absorbing pad **22**. The entire interior surfaces of the components of the head may be either smooth or milled and roughened as denoted generally at **24**. The rearward end portion of the head is gradually reduced in cross-section and fashioned into a truncated conical funnel **26** whose truncated discharge end is open as at **28** (FIG. 2). The lower half-portion of this head may be fashioned into a guideway having converging wall portions **30** aligned with coacting wall portions **32** which lead to and align with a substantially V-shaped restricted discharge portion **34** as shown in FIGS. 2 and 3. Manifestly, the hollow portion of the head provides a collecting and mixing chamber for the individual gamepieces which are here in the form of dice-like cubes. All of these cubes are basically the same in construction and a description of one will suffice for all. Each cube, also referred to as a card-cube is denoted by the numeral **36**. The usable peripheral surfaces of the cubes **36** are inscribed or otherwise provided with symbols which correspond to the customary pips which are displayed on regulation playing cards. In practice, nine such cubes are shown and when they are isolated in stacked or abutting relationship, they are confined within the limits of the interior of a suitably elongated proportionally reduced neck **38** whose restricted intake end **40** (FIG. 3) is oriented with the correspondingly reduced discharge end of the cube collecting and piloting funnel **26**. The intake end of the neck or receiver may be referred to as the forward or lefthand end and the opposite rearward or righthand end is closed by a closing disk as at **42** (FIG. 2). This disk or lid has a channel or groove therein and the end portion of the neck fits into the channel so that the flange portion **44** provides a suitable limit stop. The bottom portion of the closure **42** is provided with a depending foot-like rest **46** which is parallel with a larger but correspondingly performing foot-like rest **48** which is attached to and depends from the median part of the body **14** of the hollow head. These feet or rests are intended to reside atop a table or other support surface in the manner shown in FIG. 2, that is, when the device is in an at rest properly tilted playing position. The cover means in this embodiment (FIGS. 1 to 5) of the invention comprises a plurality of selectively usable individual covers. Each cover is denoted generally by the numeral **50** and as best shown in FIG. 5 it comprises a split-band or collar **52** which encircles the exterior of the neck. One split end portion **54** is provided with an outstanding suitably shaped and sized fingergripping tab **56**. This tab, and in fact, all of the other tabs, is provided on an easily viewable surface with an indicating number such as is denoted at **58** in FIG. 1. To provide for uniform mounting and cooperative association with the neck the peripheral surface of the neck is provided at longitudinally spaced points with separating or spacing beads **60** (FIG. 5). These beads provide spaces **62** therebetween and it is within these spaces that the split cover-bands **50** are confined but operatively rotatably mounted.

The cube-cards **36** will be made of any suitable cube dice material. As the views of the drawing show, the cube cards have appropriate symbols or pips displayed thereon. There are shown nine cubes having fifty-four sides, leaving one side of any two of the nine cubes blank on which side a suitable symbol for a joker is displayed. The two jokers could also be placed on any one of the nine cubes. The cube cards must be so arranged as not to interfere with a possible run, such as ace, king, queen, jack, ten or two, three, four, five, six or king-king-king-king-joker. This is quite possible and can be accomplished with many different arrangements.

With reference again to FIG. 1 it will be seen that the overall device is assumed to be in use and that the user or player has selected, by use of the cube viewing windows and tab-quipped covers a five "card" stud poker hand. The drawings also show the tabs or covers appropriately numbered one through nine. This number is plainly visible to all players. This number represents an unknown card in the deck or pack. In play, the dealer chooses the number which shows the card which will be played, just as he would deal a hand from a deck of cards. The significant difference is that each player has shuffled his own cards and laid out nine possible ones to choose from. In using the device, the player positions the holder or container in a vertical or upright position (not shown) with the large or capped end down and then gently shakes the holder for the desired shuffling. The holder is reversed smoothly which causes the cubes to slide from the guide means in the mixing chamber into the V-shaped channeling and keying means in the receiver portion of the neck.

In using this device as is true with other game playing devices, the rules and regulations to be followed will vary, for which reason it is deemed unnecessary to enter a more extended description on the rules and manner of usage.

It is within the purview of the invention to use a modified form of neck construction as illustrated in FIG. 6. Here, the neck is differentiated by the numeral **64**, the same being of transparent or equivalent hollow tubular form and square in cross-section. Accordingly, the lower substantially V-shaped portion **66** constitutes and provides the desired cube sliding and stacking track for the neck. Also, in this form of the invention instead of having integral beads such as at **60** in FIG. 5 the spacing beads are denoted at **68**. Each bead is carried by a ring and is centrally positioned on the ring to provide outstanding spacing flanges **70**. These rings are properly assembled and retained on the uncircular exterior of the neck in a manner to provide spaces therebetween to correspond with the aforementioned spaces **62** for the cover band. The righthand or outward end portion of the neck is closed by an appropriate rectangular closing cap or the like **72** in what is believed to be an obvious manner. Accordingly and with reference to FIG. 7 showing the assembled construction, the cubes **74** are slidingly and removably racked within the confines of the neck and the walls of the neck provide the desired window means for inspecting the cubes. The cover means here corresponds to the cover means already described, that is the band-type cover. The cover is denoted in FIG. 7 by the same reference numerals as used in FIG. 5 to illustrate the tie-in between these two forms of embodiments of the concept.

In the form of the invention shown in FIG. 8, the receiver or neck is again cylindrical in cross-section and for convenience is denoted by the numeral **76**. The V-shaped track therein is denoted at **78** and the rest at **80**. The single playing cube shown is denoted at **82** to correspond to those already referred to. In this form of the invention a segment or quarter portion of the neck is provided with a viewing window **84** which is normally covered by a segmental-shaped shutter or lid-type cover **86** which is hinged in place at **88**, covers the window and is provided at its free end with a suitable fingergrip **90**. Here again, this cover is provided with a designating number similar to the numeral **58** shown

in FIG. 1 but not detailed here. FIG. 8 shows the cover closed in full lines and open in dotted lines which, it is believed, makes the use of the cover means substantially self-evident.

It is submitted that a careful consideration of the specification in conjunction with the views of the drawings will enable the reader to obtain a full and comprehensive understanding of the subject matter of the invention, the features and advantages and manner of use. Accordingly, a more extended description of the details is deemed to be unnecessary.

The foregoing is considered as illustrative only of the principles of the invention. Further, since numerous modifications and changes will readily occur to those skilled in the art, it is not desired to limit the invention to the exact construction and operation shown and described, and accordingly all suitable modifications and equivalents may be resorted to, falling within the scope of the invention as claimed.

What is claimed as new is as follows:

1. A gaming device comprising: a portable one-piece easy-to-handle bottle-shaped container unit characterized by a hollow head embodying a cylindrical body portion having a forward openable and closable end normally closed by an attachable and detachable closing cap and a rearward truncated conical end providing a hopper-like funnel, the hollow portion of said head providing a confining, shaking and mixing chamber for a plurality of game playing cubes, the interior surfaces of said chamber and funnel being milled, and the interior surface of said cap being wholly covered by a compressibly resilient cushioning and cube rebounding pad, interior portions of said funnel having coacting converging surfaces defining cube aligning, sliding and piloting means, the discharge end of said piloting means registering with a lower portion of the rearward truncated conical discharge end of said hopper-like funnel, said container unit also embodying a straight elongated hollow neck which is reduced in cross-sectional dimension relative to the cross-sectional dimension of said cylindrical body portion and having an open intake end aligned with and communicatively joined to the discharge end of said funnel, the other end of said neck being closed, the entire lower lengthwise helf-portion of said neck being provided on its interior with a trough-like track which is V-shaped in transverse section, is commensurate in length with the length of the neck and has its intake end cooperatively aligned with the aforementioned cube aligning and piloting means, said head being non-transparent and said neck being transparent, a first rest trasverse to and secured to and depending from an exterior lower half portion of a medium portion of said cylindrical body portion and of a length substantially equal to the cross-section of said cylindrical body portion, a second rest of a height less than the height of said first rest and carried by the exterior lower half portion of said neck and located at the extreme rearward end of said neck, said rests being disposed in spaced parallel relationship and having bottom portions provided with individual spaced coplanar feet adapted to reside firmly but shiftably adjustable atop a table or an equivalent support surface in a manner to maintain the over-all container in an inclined at-rest state for card game playing requirements, both of said rests being of a height that the entire unit is elevated clear of and in a position to assume a read out plane above the plane of said support surface and permitting the container to be located in a position which is readily viewable by the user and also by competitive players, said neck being provided around its exterior peripheral surface with equidistant integral longitudinally spaced parallel encircling beads, and a plurality of split ring-like resilient selectively usable bands encircling said neck and confined for manually regulable rotation in the spaces between cooperating ones of said beads.

2. The gaming device defined in and according to claim 1 and wherein said bands are non-transparent and constitute selectively actuatable covers, one terminal end of the split end of each band having an outstanding radially projecting elongated tab constituting a finger grip, and predetermined viewable faces of each tabe having a distinctive card hand number displayed for remote viewing thereon, the spaces between said beads providing individual read out windows and, in combination, a plurality of game playing card cubes normally confined in said container and capable of being shifted and transferred by forces of gravity from said chamber by way of said piloting means to the confines of said neck and subsequently dumped from the neck back into the chamber, the inclination of said at-rest unit being such that the stacked card cubes stay put in the neck unitl intentionally unloaded from the neck and returned to said chamber.

References Cited

UNITED STATES PATENTS

1,158,774	11/1915	Beard	35—77 X
2,158,431	5/1939	Sanders	35—77
2,902,284	9/1959	Massaro.	
2,985,453	5/1961	Matisz	273—145

FOREIGN PATENTS

7,554	5/1902	Austria.
384,415	12/1932	Great Britain.
672,411	5/1952	Great Britain.
1,077,300	4/1954	France.
425,587	10/1947	Italy.
285,630	1/1953	Switzerland.

GEORGE J. MARLO, Primary Examiner

A. W. KRAMER, Assistant Examiner