E. WATERSON.

BUILDER'S SCAFFOLD.

APPLICATION FILED OCT. 16, 1913.

1,111,814. Patented Sept. 29, 1914.

Fig. 1.

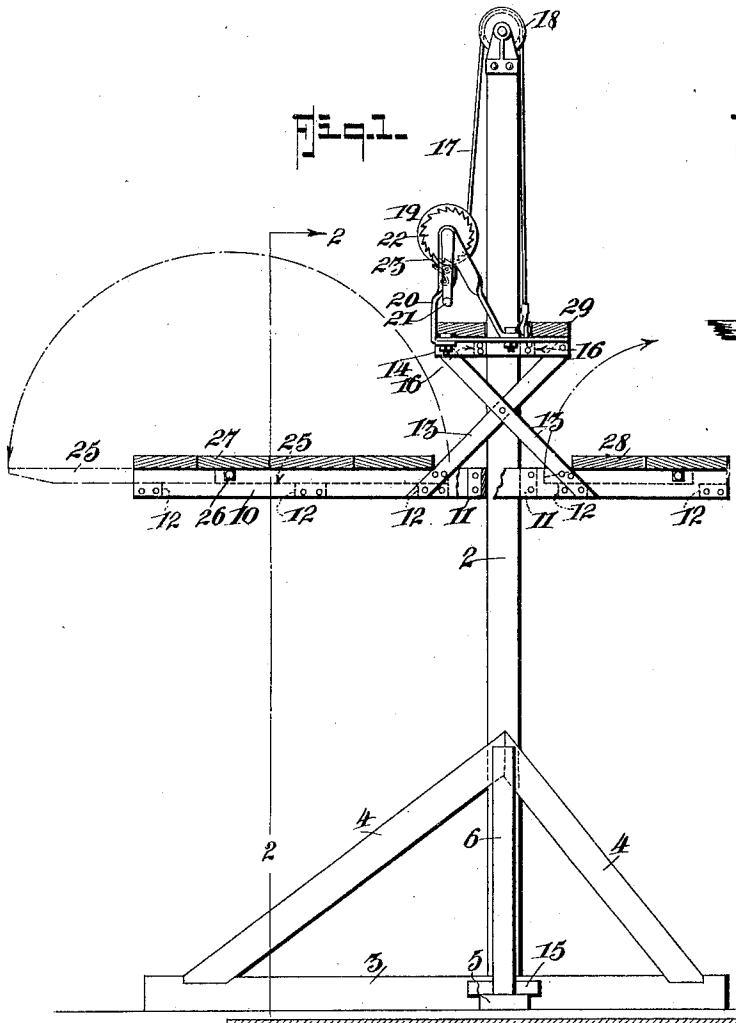

Fig. 2.

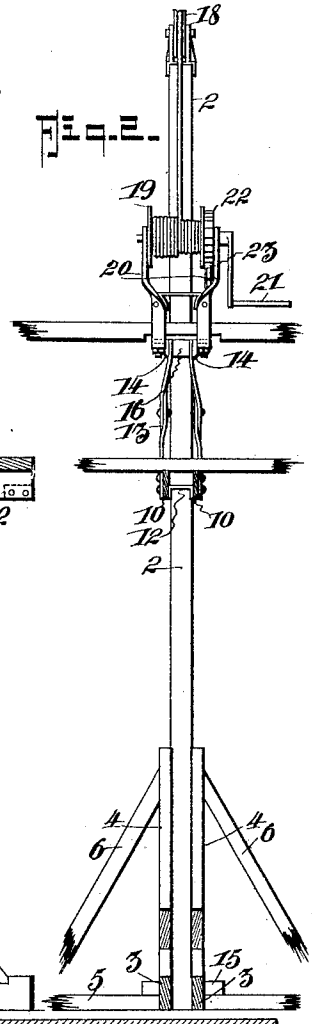

Fig. 3.

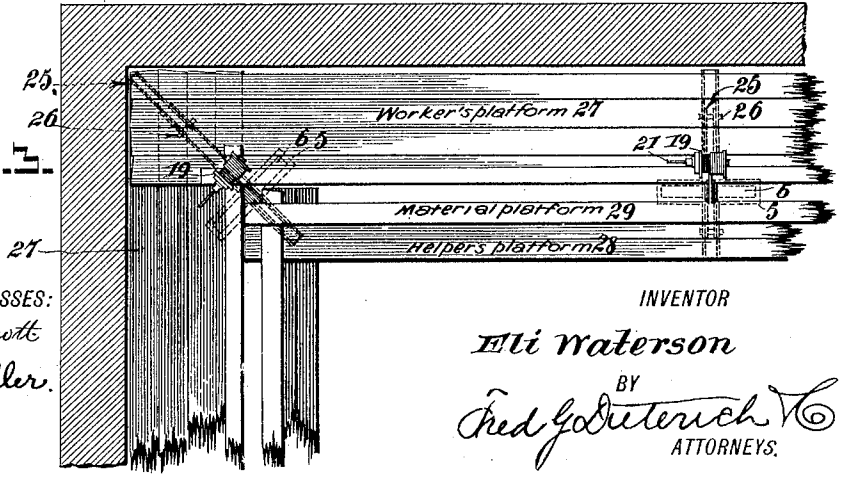

WITNESSES:

John T. Schrott

Charles Diller.

INVENTOR

Eli Waterson

BY

Fred G. Dieterich & Co

ATTORNEYS.

UNITED STATES PATENT OFFICE.

ELI WATERSON, OF VICTORIA, BRITISH COLUMBIA, CANADA.

BUILDER'S SCAFFOLD.

1,111,814. Specification of Letters Patent. Patented Sept. 29, 1914.

Application filed October 16, 1913. Serial No. 795,507.

To all whom it may concern:

Be it known that I, ELI WATERSON, a citizen of the Dominion of Canada, residing at Victoria, in the Province of British Columbia, Canada, have invented certain new and useful Improvements in Builders' Scaffolds, of which the following is a specification.

This invention relates to a building scaffold which has been particularly designed to facilitate the work of bricklayers and masons on the wall of a building by providing for them a strong scaffold which is susceptible of convenient elevation from the scaffold platform itself, to the level required as the work goes on.

The scaffold is intended to be usable from the ground level to the height of the walls of the first floor, and thereafter from the first, second and succeeding floors to the height of the floor above.

The invention comprises chiefly the construction of a platform supporting frame comprising a support for a worker's platform in front, a helper's platform at the back and between them a material platform at a convenient elevation thereabove. This platform support is constructed to be vertically movable on an upright which is securely braced to a base frame.

The movable platform support is preferably made of metal and where transport or storage is a consideration the woodwork of the structure is such as can be usable in the building when the walls are finished.

The invention is particularly described in the folowing specification, reference being made to the drawings by which it is accompanied, in which:

Figure 1 is a side elevation. Fig. 2 is a section on the line 2—2 on Fig. 1, and Fig. 3 is a plan showing the application of the scaffold support to the walls of a building.

In these drawings 2 represents the upright of square timber, which at the foot is secured to cross timbers 3, one on each side of the upright, from which cross frame braces 4 are carried to the uprights. The cross timbers 3 are notched to removably fit upon a base timber 5 having a cleat 15 on each side and struts 6 are secured for each side from the base timber 5 to the upright.

The platform carrying frame, which is vertically movable on the upright 2, comprises two side plates 10 one on each side of the upright and secured at the required distance apart by a distance piece 11 on each side of the upright and forming guides for the frame thereon, and other distance pieces 12 at intermediate positions between 11 and each end. The distance pieces 12 are between the lower parts of the plates 10 as they perform another service which will be explained later. The connected plates 10 project on each side of the upright 2 and carry on one side the planks of the worker's platform 27 and on the other side of the upright the helper's platform 28. Above the plates 10, which support the worker and helper platforms 27 and 28, the material platform 29 is carried on bearers 14 of angle iron one on each side of the upright 2 and maintained the required distance apart by a distance piece 16 on each side, in the same maner as those 11 of the supports 10. The end of each angle iron 14 is supported from the plates 10 of the lower platform support by diagonal struts 13 on each side of the upright 2. So constructed, the complete platform supporting frame is vertically movable on the upright 2 the distance apart of the upper platform supports from the lower, being sufficient to avoid any canting of the supporting frame that might cause that frame to bind on the upright and hinder free movement thereon. This platform supporting frame is raised and lowered on the upright 2 by a wire rope 17 secured to the upper part of the frame, which wire rope passes over a sheave 18 mounted on the head of the upright and connected to a reel 19 which is rotatably mounted in a frame 20 secured to the upper part of the platform supporting frame. This reel is operable from the platform by a crank handle 21, and is provided with a ratchet wheel 22 and pawl 23 that will automatically sustain the platform in any desired position of elevation. The reel carrying frame 20 is preferably attached to 14 by bolts so as to be conveniently removable for transportation.

Pivotally mounted at 26 between the supports 10 on each side of the upright 2 are extension bearers 25. These extension bearers are normally turned inward as represented by the dotted lines in Fig. 1, but are susceptible of being turned outward on their pivots when it is required to extend the reach of the platform, as represented by the dot and dash lines on one side of the

same figure. Whether folded inward out of use or extended outward, they rest upon the distance pieces 12 of the plates 10. In use, a series of these uprights 2 with their platform supports carry the necessary planks to form the platforms 27, 28, 29 round the inside walls of the building, the worker's platform 27 being adjacent to the walls. In the wall corners one of the platform supports is set at an angle of forty-five degrees so as to enable an uninterrupted runway to be provided around the wall, and it is for this angular use of the platform support that the extension bearers 25, 26 are furnished, as shown in Fig. 3 of the drawing to provide for the greater length of the diagonal.

As the work progresses the platforms are elevated by lifting their supports on the upright by means of the crank handles 21 until the wall is raised to the height of the next floor above when that floor is laid and the scaffolding is removed thereto.

I am aware that prior to this invention a builder's scaffold has been used having a raised material platform between that of the workers and helpers, who distribute the material to the workers, and I am also aware that attempts have been made to provide a platform support that may be raised as the work progresses. In all such with which I am acquainted the platform has been raised and lowered from the ground level and has not been susceptible of elevation by the workers on the platform; nor has any provision been made hitherto for the extension of the platform supports to meet the requirements of providing an uninterrupted platform around the corners of the walls of a building.

I am not aware of any construction which is as simple and direct to accomplish the desired object as what is here set forth and wherein the timber required is not framed together, so that it is not usable in the building after the walls are completed.

Having now particularly described my invention, I hereby declare that what I claim as new and desire to be protected in by Letters Patent, is:

1. In a builder's scaffold, a supporting standard relatively fixedly located, a platform supporting member longitudinally slidably mounted on said standard, said supporting member including an upper and lower section, and cross braces secured at their ends to the upper and lower sections, there being one set of cross braces at each side of the vertical support, and means for sustaining the platform supporting body on the vertical support.

2. In a builder's scaffold support, an upright, a platform support vertically movable on said upright and composed of two side plates, one on each side of the upright, distance pieces connecting said side plates and arranged in close proximity to said upright to form a channel way through which said upright projects, supplemental distance pieces connecting said side plates together at intervals throughout their lengths, said supplemental distance pieces being located toward the lower edge of said side plates and spaced from the upper edge of the same, whereby to leave recesses above said supplemental distance pieces, and an extension bar pivoted at one end between said side plates and adapted to be swung over and rest on said supplemental distance pieces and project beyond the ends of said side plates and means for sustaining said platform on said upright.

In testimony whereof I affix my signature in presence of two witnesses.

ELI WATERSON.

Witnesses:
ROWLAND BRITTAIN,
MAY WHYTE.

Copies of this patent may be obtained for five cents each, by addressing the "Commissioner of Patents. Washington, D. C."