May 4, 1954 R. J. HARDING ET AL 2,677,395

LOOM WITH FOOT-OPERATED FLY-SHUTTLE AND HAND-OPERATED HARNESS MECHANISM

Filed Dec. 27, 1951 2 Sheets-Sheet 1

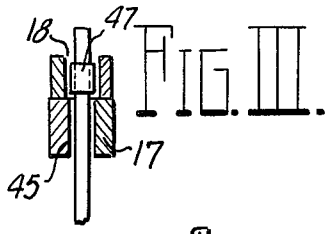

FIG. III.

FIG. I.

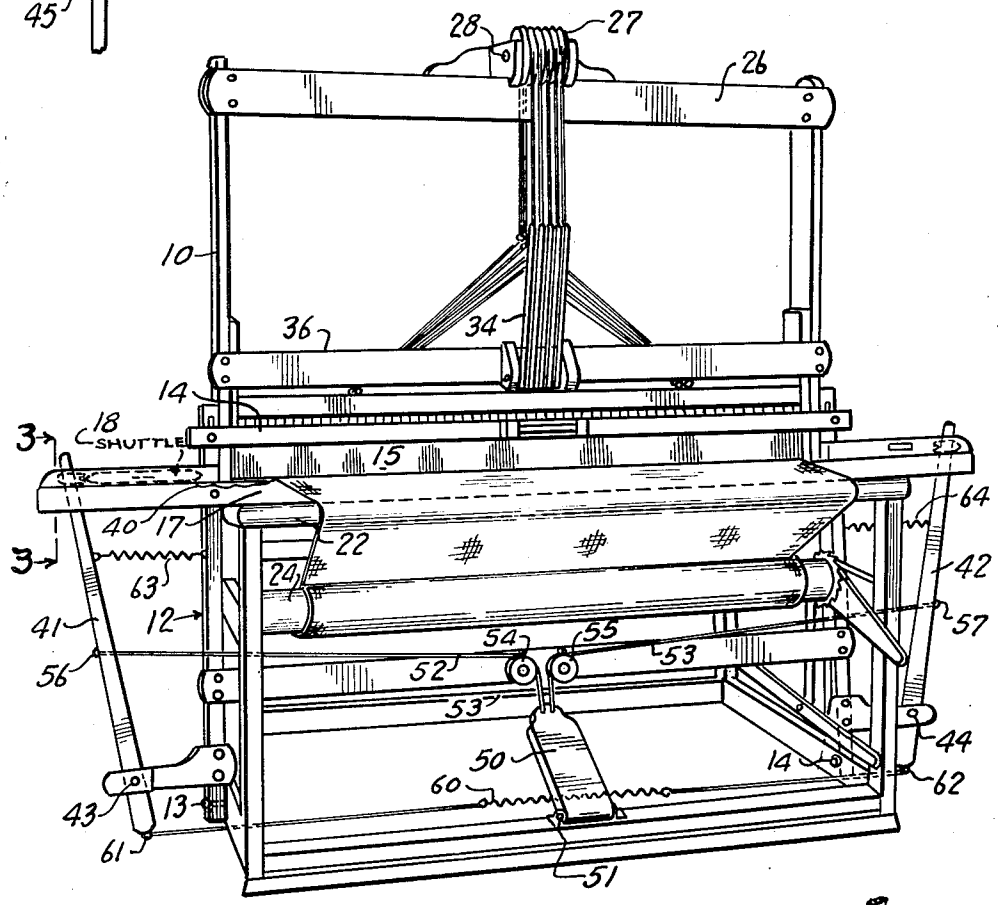

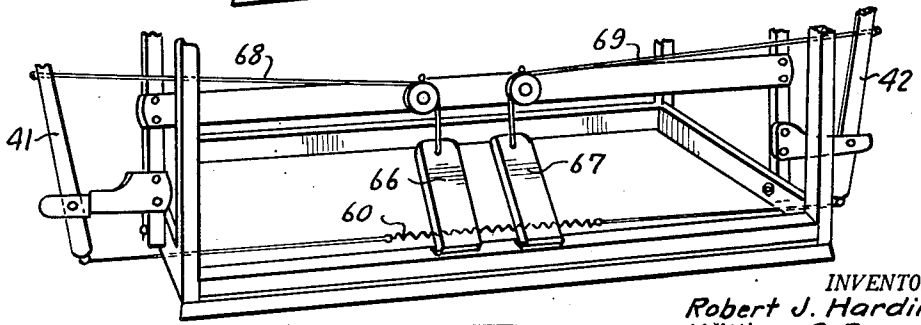

FIG. II.

INVENTORS
Robert J. Harding
BY William C. Dawson
Edmund B. Whitcomb
ATTORNEY

May 4, 1954

R. J. HARDING ET AL

LOOM WITH FOOT-OPERATED FLY-SHUTTLE AND HAND-OPERATED HARNESS MECHANISM

2,677,395

Filed Dec. 27, 1951

2 Sheets-Sheet 2

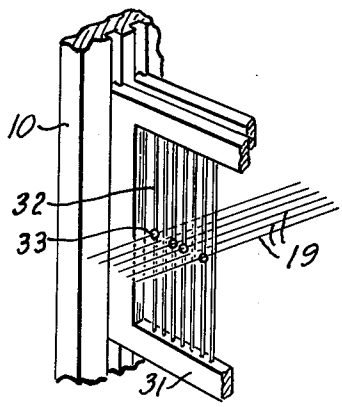

FIG. V.

FIG. IV.

INVENTORS
Robert J. Harding
William C. Dawson
BY
Edmund B Whitcomb
ATTORNEY

Patented May 4, 1954

2,677,395

UNITED STATES PATENT OFFICE

2,677,395

LOOM WITH FOOT-OPERATED FLY-SHUTTLE AND HAND-OPERATED HARNESS MECHANISM

Robert J. Harding, South Amherst, Ohio, and William C. Dawson, Peterborough, Ontario, Canada, assignors to said William C. Dawson, said Robert J. Harding, and Geraldine Larkin, Toledo, Ohio

Application December 27, 1951, Serial No. 263,777

4 Claims. (Cl. 139—29)

1

This invention relates to hand weaving machines in which a special coaction between the harness lifting mechanism forming the shedding and the fly-shuttle operating mechanism are arranged so that the operator, in a natural manner, operates the fly-shuttle mechanism with his feet and has an individual control of the harness lifting mechanism as well as the beater with his hands, the operator sitting down in front of the loom. This results in a minimum of fatigue resulting in the manipulation of the loom, and since the hands instead of the feet of the operator are now used for designing the patterns, operators readily become more skillful in producing various original designs.

A further object of the invention is to provide an improved mechanism in hand-operated looms of the character indicated in which a succession of different individual designs of fabric may be readily made by the operator, or, on the other hand, quantity production of a large number of identical designs may be readily turned out.

Further objects and advantages are within the scope of this invention such as relate to the arrangement, operation and function of the related elements of the structure, to various details of construction and to combinations of parts, elements per se, and to economies of manufacture and numerous other features as will be apparent from a consideration of the specification and drawings of a form of the invention, which may be preferred, in which:

Figure I is a front elevation of our improved loom;

Figure II is a partial elevation showing an alternate pedal arrangement for operating the shuttle;

Figure III is an end view of the shuttle box;

Figure IV is a side elevation with parts broken away showing an operator using the loom; and

Figure V is a partial elevation of a detail of the harness mechanism.

Referring to Figure I, we have shown a loom with the usual type of main frame 10 before which the operator may sit on the seat 11, the frame 10 carrying the pivoted beater frame 12, the latter being pivoted at 13 and 14 to the main frame 10. The beater frame 12, of course, carries the usual beater bar 14 carrying the depending comb 15, consisting of the usual plurality of wires connected to the top of the beater bar 14 and at the bottom to a crossbar 17 which also forms the shuttle support for the shuttle to ride upon. As shown in Figure IV, this shuttle bar 17 is located at an angle reared downwardly at the back so that the shuttle box containing the shuttle 18 will naturally lie backward and downward upon the shuttle bar 17 and against the comb 15.

2

At the back of the machine, the warp threads 19, as usual, are mounted on the roller 20, these warp threads 19 coming over the frame bar 21 are then passed forward through the harness mechanism and the beater comb 15 so that after the transverse weft threads are applied, the finished product comes to the front of the machine over the bar 22 and down to the finished cloth roll 24.

Our invention consists in a novel arrangement for the operator to manipulate the several parts of the loom, particularly controlling the harness with his hands, permitting ready manipulation of the beater bar as usual and operating the shuttle mechanism by the operator's feet either with the use of a single pedal, shown in Figure I, or with double pedals, shown in Figure II.

Referring first to the harness operating mechanism, attention is called to the fact that we provide centrally of the top frame bar 26, a series of pulleys 27 suitably pivoted on a common shaft 28 thereby forming a single set of pulleys carried at the front on the top of the loom by the crossbar 26, as indicated. Over these pulleys 27, a plurality of cords 30 are positioned, that is in our embodiment herein shown there is one pulley 27 for each cord 30 and one cord is connected to one harness frame 31, one cord for each harness frame, each of the harness frames 31 carrying the several heddle wires 32, certain of which are smooth and certain of which carry the usual heddle eyes 33 as understood in the weaving art.

In the particular embodiment of our improved loom, here illustrated, we have shown a harness mechanism consisting of five frames with various arrangements of eyes and smooth heddle wires to be employed, depending upon the weave to be produced.

Referring particularly to Figures I and IV, each of the harness frame manipulating cords 30 are controlled by levers 34 positioned directly in front centrally of the loom in a position so that the cords 30 may be readily grasped by the hand of the operator. Thus, these levers 34 are pivoted as shown at 35 to a specially installed crossbar 36 attached to the frame, as shown in Figure I. It will be noted that the several handles 34 for controlling different harness frames are located close together so that the operator

may operate one or a plurality thereof with one hand only, leaving his other hand and arm free to manipulate the beater bar 14 in the usual manner.

Referring to our improved arrangement for controlling the shuttle, in other words, to insert the weft threads 40 into the weave, we employ the usual bobbin and shuttle box construction 18, whereas, our manipulation thereof consists of the novel arrangement of providing picker sticks 41 and 42 on a hand loom, said picker sticks being pivoted to the beater frame as at 43 and 44. The upper end of the picker sticks extend through a slot 45 in the shuttle bar 17, the picker sticks carrying the picker 47 to absorb the shock of striking the shuttle when the same is to be thrown through the shed formed by the harness. The picker sticks 41 and 42, as shown in Figure I, are operated by a single pedal 50 pivoted centrally of the frame at 51 to the frame 10, the pedal 50 carrying cords 52 and 53 passing over pulleys 54 and 55, the other ends of the cords 52 and 53 being connected to the picker sticks 41 and 42, as shown at 56 and 57. Preferably, this connection to the picker sticks is such that a modest movement of the pedal is effective to move the picker sticks quickly a substantial distance to satisfactorily throw the shuttle. In the embodiment of our invention, illustrated in Figure I, it will be seen that the operator pushes the pedal 50 regardless on which side the shuttle happens to be located. This, in turn, will throw the shuttle through the shed of the web formed by the harness mechanism which has been manipulated to the desired position according to the design of the particular weave being produced. To maintain the picker sticks 41 and 42 normally in their outermost positions as well as to properly position the pedal 50, we utilize, as shown in Figure I, a coiled spring 60 extending across the machine connected at each end to the bottom end of the picker sticks 41 and 42, as at 61 and 62, the spring 60 being under tension and normally urging the picker sticks in their outermost positions.

We have also employed additional springs indicated at 63 and 64 between the upper portions of the picker sticks and the beater frame 12 operating in the opposite direction on the picker sticks 41 and 42 from the spring 60 in order to properly balance the action of the manipulation of the shuttle from both picker sticks 41 and 42.

In Figure II, we have illustrated the control of the picker sticks with two pedals 66 and 67, each having an independent cord 68 and 69 connecting between the ends of the pedals 66 and 67 with the picker sticks 41 and 42. In the embodiment of Figure II, we also use the spring 60 for normally returning the picker sticks to the outermost position as well as the balancing for springs 63 and 64 above described in connection with Figure I.

It is apparent that, within the scope of the invention, modifications and different arrangements may be made other than is herein disclosed, and the present disclosure is illustrative merely, the invention comprehending all variations thereof.

What we claim is:

1. In a hand loom having a main frame, the combination of a foot-operated shuttle mechanism and a hand-operated beater bar and hand-operated shed forming mechanism, each mechanism provided with actuating means centrally and vertically positioned in said loom for hand and foot operation by a single person conveniently located in front of said loom, said beater bar and shed mechanism including a pivoted beater frame carrying a beater bar and a shed forming mechanism comprising harness frames, a hand-operated harness frame lifting mechanism comprising a single set of pulleys mounted centrally on the top crossbar of the main frame, a plurality of cords, one connected to each of the harness frames extending over said pulleys and a plurality of hand-operated levers pivoted to a crossbar located centrally of the loom in a position to be readily grasped by the operator in front of the loom, one lever being connected to one of the cords for one frame; and said shuttle operating mechanism comprising a pair of picker sticks pivoted to the beater frame adapted to throw the shuttle across the shuttle bar; foot-operated means including a pedal pivoted at the bottom of the loom in the front central portion thereof; a pair of cords extending from said pedal to each of said picker sticks and spring means for returning said picker sticks to the inoperative position out of contact with the shuttle.

2. In a hand loom having a main frame, the combination of a foot-operated shuttle mechanism and a hand-operated beater bar and hand-operated shed forming mechanism, each mechanism provided with actuating means centrally and vertically positioned in said loom for hand and foot operation by a single person conveniently located in front of said loom, said beater bar and shed mechanism including a pivoted beater frame carrying a transverse hand-operated beater bar and a shed forming mechanism comprising harness frames; a hand-operated harness frame lifting mechanism comprising a single set of pulleys mounted centrally on the top crossbar of the main frame, a plurality of cords, one connected to each of the harness frames extending over said pulleys and a plurality of hand-operated levers pivoted centrally of the loom in a position to be readily grasped by the operator from the front of the loom, one lever being connected to one cord for one harness frame; and said shuttle operating mechanism comprising a pair of picker sticks pivoted to the beater frame; foot-operated means including a pedal pivoted at the bottom of the frame in the front portion thereof; a pair of cords extending from said pedal operated means to each of said picker sticks to operate the picker sticks and a spring for returning said picker sticks to the outermost position with the end of said stick out of contact with the shuttle.

3. In a hand loom having a main frame, the combination of a foot-operated shuttle mechanism and a hand-operated beater bar and hand-operated shed forming mechanism, each mechanism provided with actuating means centrally and vertically positioned in said loom for hand and foot operation by a single person conveniently located in front of said loom, said beater bar and shed mechanism including a pivoted beater frame with a transverse hand-operated beater bar and a shed forming mechanism comprising harness frames; a hand-operated harness frame lifting mechanism comprising a single set of pulleys mounted centrally on the top crossbar of the main frame, a plurality of cords, one connected to each of the harness frames extending over said pulleys and a plurality of hand-operated levers pivoted to a crossbar on the main frame centrally of the loom in a position to be readily

grasped by the operator, one lever being connected to one cord for one frame; and said shuttle operating mechanism comprising a pair of picker sticks pivoted to the beater frame; a pair of pedals pivoted at the bottom of the frame in the front portion thereof; a cord extending from each pedal to one of said picker sticks; and spring means for returning said picker sticks to normal position.

4. In a hand loom having a main frame, the combination of a foot-operated shuttle mechanism and a hand-operated beater bar and hand-operated shed forming mechanism, each mechanism provided with actuating means centrally and vertically positioned in said loom for hand and foot operation by a single person conveniently located in front of said loom, said beater bar and shed mechanism including a pivoted beater frame with a transverse hand-operated beater bar and a shed forming mechanism comprising harness frames; a hand-operated harness frame lifting mechanism comprising a single set of pulleys mounted centrally of the top crossbar of the main frame, a plurality of cords, one connected to each of the harness frames extending over said pulleys and a plurality of hand-operated levers pivoted to a crossbar on the main frame centrally of the loom in a position to be readily grasped by the operator, one lever being connected to one cord for one frame; and said shuttle operating mechanism comprising a pair of picker sticks pivoted to the beater frame; foot-operated means consisting of a pedal pivoted at the bottom of the frame in the front portion thereof; a pair of cords extending from said pedal operated means to each of said picker sticks; a spring for returning said picker sticks to the outermost position of the end of said stick contacting the shuttle; and balancing springs between each picker stick and a beater frame member.

References Cited in the file of this patent

UNITED STATES PATENTS

Number	Name	Date
225,566	Chandlee	Mar. 16, 1880

FOREIGN PATENTS

Number	Country	Date
559,568	Great Britain	Feb. 24, 1944
607,411	Great Britain	Aug. 31, 1948
634,120	Great Britain	Mar. 15, 1950
946,673	France	Dec. 27, 1948