April 20, 1954 N. E. ZIEGE 2,675,793

VAPOR-LIQUID SELECTOR VALVE

Filed Dec. 26, 1951

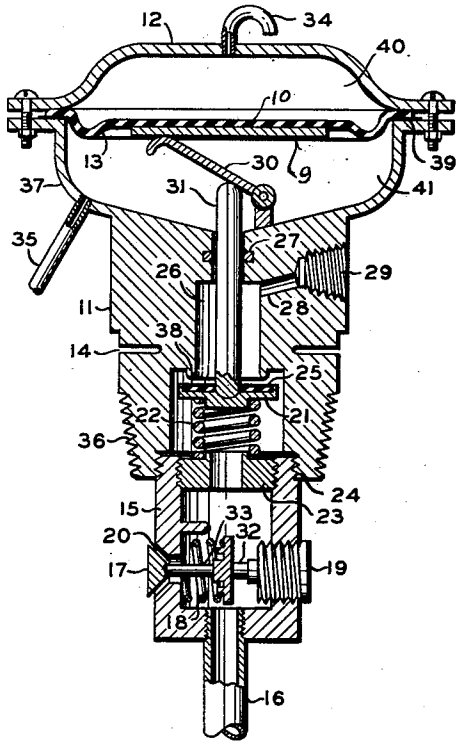

FIG. 1

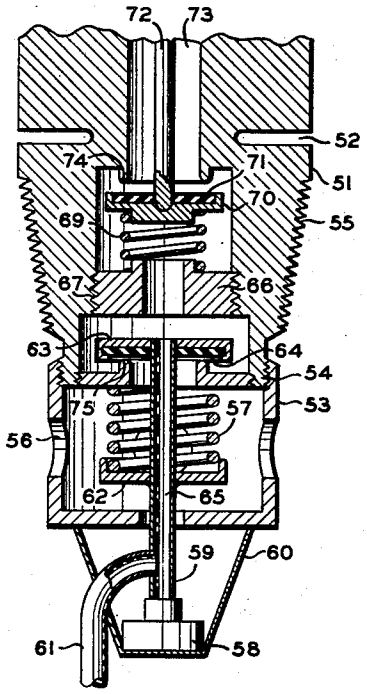

FIG. 2

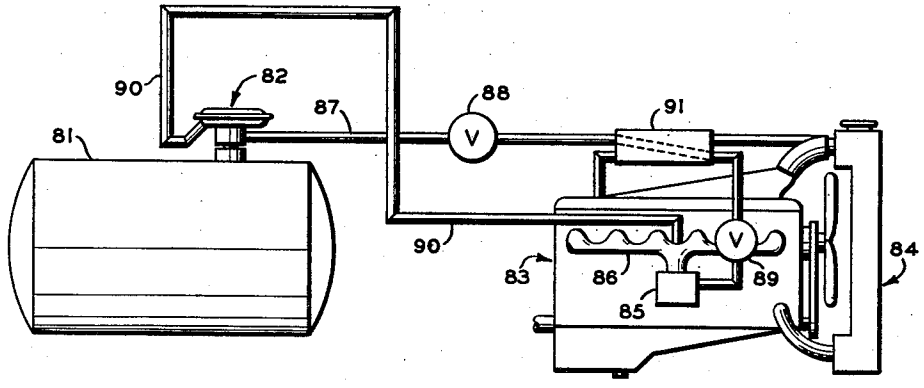

FIG. 3

INVENTOR.
N. E. ZIEGE
BY Hudson & Young
ATTORNEYS

Patented Apr. 20, 1954

2,675,793

UNITED STATES PATENT OFFICE

2,675,793

VAPOR-LIQUID SELECTOR VALVE

Norman E. Ziege, Bartlesville, Okla., assignor to Phillips Petroleum Company, a corporation of Delaware

Application December 26, 1951, Serial No. 263,219

9 Claims. (Cl. 123—121)

1

This invention relates to internal combustion engine operation. In one aspect it relates to an improved apparatus for use with liquefied propane as an internal combustion engine fuel. In another aspect it relates to a liquid-vapor selector valve for use with liquefied petroleum gas fuel systems, in which valve liquid and vapor are selected alternately in response to temperature within the fuel tank.

An object of this invention is to devise an apparatus for controlling the pressure of liquefied propane in internal combustion engine fuel tanks when the engine is powered with propane.

Another object of this invention is to devise an apparatus for use in maintaining relatively low pressures in liquefied propane fuel tanks under internal combustion engine operating temperatures.

Yet another object of my invention is to provide a liquid-vapor selector valve for use with liquefied petroleum gas fuel systems.

Still other objects and advantages of my invention will be realized upon reading the following disclosure.

The term "propane" as used hereinbelow refers to commercial propane, and specifically to liquefied petroleum gas. This latter term includes, in addition to propane, such other hydrocarbons as butane, isobutane, isopentane and the like. When one or more of these less volatile hydrocarbons is included with propane in liquefied petroleum gas, the latter has correspondingly lower vapor pressures than propane.

Since the vapor pressure of commercial propane is about 200 pounds per square inch at 100° F. the use of heavy pressure tanks as fuel tanks is necessary. At temperatures higher than 100° F., which temperatures are sometimes encountered during certain seasons of the year, propane has still higher vapor pressures than the above mentioned 200 pounds. Thus, the utilization of this liquefied fuel under such temperature and pressure conditions becomes a problem requiring careful solution.

In the prior art it is old to select liquid or gas withdrawal from a tank by pressure responsive means selecting the gas withdrawal above a predetermined pressure and the liquid withdrawal below said predetermined pressure. Pressure responsive means are particularly sensitive to maladjustment and failure to operate properly after a relatively short period of time. The pressure at which they open soon varies widely from the original predetermined pressure, which results in a dangerous condition and failure of their entire

2

purpose. In contrast, thermal responsive means does not change in long periods of time, but always acts at the same predetermined temperature even after years have passed. I have now discovered that temperature responsive means can accomplish the better results as to pressure control in liquid or gas withdrawal selection and continue to accomplish accurate control over much longer periods of time, with less servicing and adjustment, than direct pressure control. In accordance with the objects of my invention I have devised an apparatus which controls the alternate delivery of liquefied fuel, or vapor, from a tank in response to tank temperature, delivering vapor when the tank is above a predetermined temperature and delivering liquid when the tank is below said temperature.

In the drawing Figure 1 is an elevational view, partly in section, of a preferred embodiment of my invention. Figure 2 is an elevational view, in part, and partly in section, of another embodiment of my invention. Figure 3 is a diagrammatic representation of the apparatus of my invention as a portion of a complete internal combustion engine assembly.

Referring now to the drawing and specifically to Figure 1, this apparatus consists of a housing member 11 which has in general a circular cross section. The main or upper portion of this body member terminates as a lower cover plate 37 for a diaphragm assembly 13. This housing member 11 has an axial opening throughout its length, this opening being of different diameters in different sections. In the upper portion of the body member 11 the opening is of small diameter and accommodates a valve stem 31. Surrounding this valve stem in this small diameter opening is an O-ring seal 27 to prevent leakage of liquefied petroleum gas. At the lower end of this valve stem 31 is a valve head 21 which has provided on its upper surface a resilient sealing member 25. This resilient sealing member is intended to form a seal between the valve head and a valve seat 38. Biasing the valve 21 in a normally closed position is a compression spring 22. This compression spring is supported by a bushing member 23, which in turn is threaded and held in position by threads of a case member 15. This case 15 is threaded at 24 to the bottom portion of the housing member 11. The case 15 is provided on one side with a valve opening 20 into which is disposed a valve 17. A valve stem 33 of the valve 17 is biased into a normally closed position by a compression spring 18. At a point diametrically across from the valve opening 20 is a thermo-re-

sponsive or thermostatic element 19. This element 19 is of a generally circular cross section with both ends closed with the exception of a small opening on one end into which is provided a push rod 32. This push rod 32 is intended to be positioned in contact with the end portion of the valve stem assembly 33 in such a manner that as the thermoresponsive element experiences an increase of temperature the push rod 32 moves from right to left thereby lifting the valve head 17 from its seat. Conversely, when the thermo-responsive element 19 experiences a decrease in temperature the compression spring 18 is intended to exert sufficient force to seat the valve 17 and to push the push rod 32 from left to right. This thermo-responsive element 19 is provided with a semi-solid to solid thermo-expansive material mounted within a rigid shell.

The housing member 11 is provided with a desirable weakness ring 14 which of course is situated so that in case of emergency the valve will break at this point while still permitting the valve head 21 to remain seated to prevent loss of high pressure fuel. Resting upon the top of the diaphragm 13 is a top cover plate 12 provided with a vent tube 34. This vent tube 34 is intended to vent the space between the diaphragm 13 and the cover plate 12 to the atmosphere. Since this space is vented to the atmosphere it is obviously not necessary to use a gasket or other sealing means between the periphery of the cover plate and the top of the diaphragm. However, since the space below the diaphragm and above the lower cover plate 37 must be gas-tight a gasket 39 may be inserted between the top periphery of the cover plate 37 and the lower circumference of the diaphragm 13 in such a manner that as the apparatus is assembled the tightening of the bolts holding the diaphragm in place will effect the proper seal.

On the bottom end of the case 15 is provided a liquid dip-tube 16, the lower end of which is intended to terminate in the liquid containing space of a LPG fuel tank in such a manner that liquid fuel may be drawn into the selector valve apparatus.

The threaded section 36 is intended to mesh with a corresponding threaded section of a fuel tank into which the assembly is installed for use. A tube 35 communicates with the space below the diaphragm 13 and is intended to lead to the intake manifold of an internal combustion engine for supplying vacuum to the underside of the diaphragm. A push lever 30 is provided as shown in contact with the underside of the diaphragm 13 and the upper end of the valve stem 31 in such a manner that when the pressure in space 41 is less than the pressure in space 40 the diaphragm 13 moves downward to force lever 30 downward and to open the valve 21. When pressure in the space 41 is equal to or substantially equal to the pressure in space 40 the compression spring 22 is intended to bias the valve 21 against the seat 38 to close this valve, which movement causes the upward movement of the lever 30 with the result that the diaphragm 13 is moved upward. The diaphragm 13 is intended to refer to an assembly including the diaphragm 10 and a diaphragm plate 9 which is the element in contact with the push lever 30.

A space 26 surrounding the valve stem 31 is intended to carry fuel which passes the valve seat 38 to a conduit 28 and thence through the threaded outlet 29 into a tube 87 (Figure 3) which conducts the fuel to the carburetion system.

The embodiment of my invention shown in Figure 2 is intended to illustrate the use of a similar thermo-responsive element as was used in relation to Figure 1 but with the element disposed in a vertical position. In this embodiment a thermo-responsive element 58 is held in its position by a support member 60 which in turn is attached to the bottom of a case member 53. The case 53 is threaded at 54 to the bottom portion of a selector valve body member 51. This body member 51 is in general similar to the body member 11 of Figure 1 and the case 53 is intended to be more or less similar to the case 15 of Figure 1. Particular points of construction are however different than those involved in Figure 1. A fuel valve 70 is provided with a resilient sealing member 71, which is intended to seal against a valve seat 74 to open or to close the source of fuel to the carburetion system. When fuel passes this valve seat 74 it flows through the space 73 and on through a conduit, not shown, to the carburetion system of an engine. A compression spring 69 held in position by a bushing member 66 biases the valve 70 into a normally closed position. This bushing 66 is threaded at 67 to the main body member 51 as shown. This bushing 66 is provided with an opening 68 through which fuel may pass on its way to the valve 70. The lower end of the body member 51 is constructed so as to provide a valve seat 75 for use with a resilient sealing member 64 of the valve 63. A valve stem 59, which contains an axial opening 65, contacts at its lower end a thermo-responsive element 58. To one side of this hollow valve stem is attached a tube 61 which tube is termed a liquid dip-tube. This tube 61 serves the same function as tube 16 of Figure 1. Attached to the valve stem 59 at a point within the case 53 is a spring rest member 62. This spring rest member 62 is intended to serve as a support for a compression spring 57 which is intended to bias the valve 63 into a normally closed position with respect to the valve seat 75.

Some openings 56 are provided in the case 53 for inlet of gaseous fuel from the vapor space of the fuel tank into the selector valve apparatus. These openings 56 are of course provided in the case 53 and at a point below the main fuel valve 70.

A weakness ring 52 serves a similar purpose to the weakness ring 14 of Figure 1. Threads 55 are intended to be used in installing the selector valve apparatus of Figure 2 into a fuel tank. A valve stem 72 contacts the valve head 70, as shown, and this stem extends upward through a small diameter opening into a space and into operative relation with a diaphragm similar to diaphragm assembly 13 of Figure 1, and not shown in Figure 2.

Figure 3 illustrates the installation of a selector valve of my invention in an internal combustion engine apparatus. A fuel tank 81 contains a liquefied petroleum gas fuel. This tank is provided with a selector valve of the type illustrated in Figure 1, preferably, and identified by reference numeral 82. Connected with the threaded opening 29 is a conduit 87 for passage of fuel from the tank to a carburetor 85. This conduit 87 is provided with a constant pressure regulator valve 88. The conduit may be provided with a second constant pressure regulator valve 89 and a heat exchanger or fuel vaporizer 91, if desired. A conduit 35 of Figure 3 is illustrated as at-

tached to the lower side of the diaphragm case of the valve 82 and this conduit 90 is intended to be attached to the space below the diaphragm and to a pressure reducing apparatus such as the intake manifold 86. The engine assembly is identified in Figure 3 by reference numeral 83, while the cooling system is identified by reference numeral 84.

For starting an internal combustion engine operating on liquefied petroleum gas and using the selector valve of Figure 1, it is intended that upon pushing the starter of the engine a vacuum will be immediately created in the intake manifold. This vacuum is transmitted through conduit 90 of Figure 3 and through the tube connection 35 of Figure 1 into the space 41 below the diaphragm 13. This reduction of pressure in this space forces the diaphragm 13 downward, which movement pushes the lever 30, valve stem 31 and opens valve 21 with respect to its seat 38. When this valve opens liquid or vapor fuel can pass the valve seat 38 and through conduits 26 and 28 and through threaded opening 29, all of Figure 1, and thence through the conduit 87 of Figure 3 to the carburetor. Assuming that the engine starts, this partial vacuum is maintained in the space 41 below the diaphragm and the valve 21 is therefore held in an open position to admit fuel continuously to the engine.

When a truck or bus or other automotive vehicle is on a highway under for example, summer time conditions, heat from the highway and from the summer sun may heat the fuel tank to such a temperature that the pressure of the propane will be increased to a pressure approaching the maximum safe operating pressure. According to my invention it is intended that when the temperature of the propane increases to a predetermined temperature value the thermo-responsive device 19 (Figure 1) operates to open the valve 17 and permit removal of this high pressure propane gas through the opening 20 and around valve 21 for use in the engine. Upon removal of propane gas, liquid propane evaporates in an attempt to reestablish pressure equilibrium in the fuel tank and this evaporation of liquid propane cools the remaining liquid due to the latent heat of evaporation. As long as the temperature within the fuel tank remains above a predetermined value the thermo-responsive element 19 holds the valve 17 open and permits removal of fuel vapor with the resultant evaporation of liquid fuel. When such a condition is reached that the liquid propane has been materially cooled or in other words when its temperature reaches a predetermined relatively low value the thermo-responsive element 19 contracts and permits the compression spring 18 to close the valve 17. When valve 17 is closed liquid propane for fuel purposes is then withdrawn through the liquid dip-tube 16 and liquid accordingly passes the valve 21 and flows to the carburetion system.

As long as the temperature in the fuel tank remains below a predetermined temperature value the thermo-responsive element 19 permits the valve 17 to remain closed, and, as explained above, when the temperature in the fuel tank rises to a predetermined value then the temperature responsive element 19 again operates to open the valve 17 and permit the withdrawal of vaporous fuel which operation through evaporation of the liquid cools the contents of the tank. In this manner the pressure of the high vapor pressure fuel is held to a low and safe operating pressure.

The apparatus illustrated in Figure 2 operates in substantially the same manner as does the apparatus of Figure 1. When the temperature of the contents of the fuel tank reaches a predetermined maximum temperature the thermo-reponsive element 58 operates to raise the valve stem 59 and unseat the sealing member 64 from its seat 75. When this valve is unseated, vaporous fuel entering the case 53 through openings 56 is withdrawn through the valve 63 and thence is taken on through valve 70 to the carburetion system. Similarly when the temperature within the tank has been decreased to a predetermined low value the thermo-responsive element 58 operates to permit the compression spring 57 to close the valve 63. When valve 63 is closed only liquid fuel may be withdrawn through the liquid dip-tube 61 and through the hollow space 65 of the valve stem 59 for passage on through valve 70 to the engine.

In the embodiments illustrated in Figures 1 and 2, it is intended that when the vapor valve 17 of Figure 1 and the vapor valve 63 of Figure 2 are open vaporous fuel will flow in preference to liquid fuel due to the hydrostatic head of liquid fuel in the liquid dip-tubes 16 and 61. While this pressure may be small in terms of pounds or fractions of a pound, yet it is sufficient that when the vapor flow control valves are open, only or substantially only vapor will flow. However, if splashing of the liquid contents in the tank is caused from any reason it is immaterial whether liquid is withdrawn as fuel because as soon as this splashing effect subsides gaseous fuel will then be withdrawn. Such a condition would merely tend to retard the effective operation of the selector valve only momentarily.

Materials of construction of the apparatus of my invention may be selected from among those commercially available. Corrosion by such type of fuel is negligible.

While certain embodiments of my invention have been described for illustrative purposes the invention obviously is not limited thereto.

I claim:

1. A liquid-vapor selector valve assembly for use in liquefied petroleum gas fuel systems comprising, in combination, an elongated body member of generally circular cross section, a passageway throughout the length of said body member, the axis of said passageway coinciding with the axis of said body member, a valve having a head and a stem in said passageway for opening and closing said passageway to the flow of fluid, the axis of said valve coinciding with the axis of said body member, a compression spring biasing said valve in a normally closed position, a pressure operative diaphragm in operative contact with the stem of said valve and disposed in gas-tight relation with the upper end of said body member, a vented cover plate disposed above said diaphragm, a tube connection in said upper end of said body member and below said diaphragm, a sealing means in said passageway sealing the valve stem against leakage of fuel, a first opening in said body member providing communication from a point below said sealing means in said passageway with the exterior for outlet of fuel, a dip-tube attached to the bottom of said body member for admission of liquid fuel to said passageway, a port in the lower portion of said body member for admission of gaseous fuel to said passageway, a thermally operable valve for opening said port and a compression spring biasing said thermally operable valve in a normally closed position.

2. The selector valve assembly of claim 1 wherein the axis of the thermally operable valve is disposed normal to the axis of said elongated body member.

3. The selector valve assembly of claim 1 wherein the axis of the thermally operable valve coincides with axis of said elongated body member.

4. The selector valve assembly of claim 1 wherein said thermally operable valve opens upon increase of temperature of the thermally responsive element.

5. In the valve assembly of claim 4 wherein the thermally responsive element is a semi-solid to solid plastic material.

6. In a liquefied petroleum gas fuel system the improvement comprising a tank for storing liquefied petroleum gas fuel, a conduit for carrying said fuel from the tank to its point of use, a fuel flow control valve disposed at least in part in said tank and connecting said conduit with said tank, a liquid dip-tube extending from said valve to the liquid-containing space in said tank, a port in the wall of said valve inside said tank for transmitting vapor from the vapor space of said tank to said valve, a port valve having a head and a stem disposed in said tank and in operative relation to said port to open and to close same, the stem of said port valve being disposed at right angles to the axis of said fuel flow control valve, a compression spring biasing said port valve in a normally closed position, and a semi-solid to solid matter filled thermally expansive capsule in operative relation to the stem of said

port valve, said capsule being so disposed as to open said port valve upon rise of temperature of said capsule.

7. A volatile liquid fuel system for an internal combustion engine having an intake comprising a fuel tank, a fuel line connected in communication with said tank and said intake of said engine, a motor valve connected in said fuel line biased to close the same and controlling flow of fuel therethrough, said motor being connected by a vacuum line to said intake and responsive to partial vacuum in said intake to open said fuel line, a dip-tube in said tank for liquid withdrawal connected in communication with said fuel line, and a thermal motor valve biased to closed position connected in communication with the upper portion of said tank and the interior of said dip-tube and controlling flow of vapor therebetween responsive to a predetermined temperature, said thermal motor opening said thermal motor valve above a predetermined temperature.

8. The system of claim 7 wherein the axis of said thermal motor valve is normal to the axis of said dip-tube.

9. The system of claim 7 wherein the axis of said thermal motor valve coincides with at least a portion of said dip-tube.

References Cited in the file of this patent

UNITED STATES PATENTS

Number	Name	Date
2,226,810	Ensign et al.	Dec. 31, 1940