Office de la Propriété Intellectuelle du Canada
Un organisme d'Industrie Canada

Canadian Intellectual Property Office
An agency of Industry Canada

CA 2519005 A1 2004/09/30

(21) 2 519 005

(12) DEMANDE DE BREVET CANADIEN
CANADIAN PATENT APPLICATION

(13) A1

(86) Date de dépôt PCT/PCT Filing Date: 2004/03/17
(87) Date publication PCT/PCT Publication Date: 2004/09/30
(85) Entrée phase nationale/National Entry: 2005/09/13
(86) N° demande PCT/PCT Application No.: EP 2004/002729
(87) N° publication PCT/PCT Publication No.: 2004/083662
(30) Priorité/Priority: 2003/03/22 (103 12 873.5) DE

(51) Cl.Int.[7]/Int.Cl.[7] F16C 33/10, F16C 33/24, F16C 33/14

(71) Demandeurs/Applicants:
GKN SINTER METALS GMBH, DE;
ROBERT BOSCH GMBH, DE

(72) Inventeurs/Inventors:
VOGT, ANDREAS, DE;
DORNHOFER, GERD, DE;
KOCH, HANS-PETER, DE;
STEHR, WERNER, DE;
MESSNER, CHRISTINA, DE;
KRONBICHLER, PETER, DE;
...

(74) Agent: OGILVY RENAULT LLP/S.E.N.C.R.L.,S.R.L.

(54) Titre : PALIER LISSE FRITTE AYANT UNE COMPRESSION D'ALESAGE A VARIATION CONTINUE
(54) Title: POROUS PLAIN BEARING WITH CONTINUOUS VARIATION OF THE BOREHOLE COMPRESSION

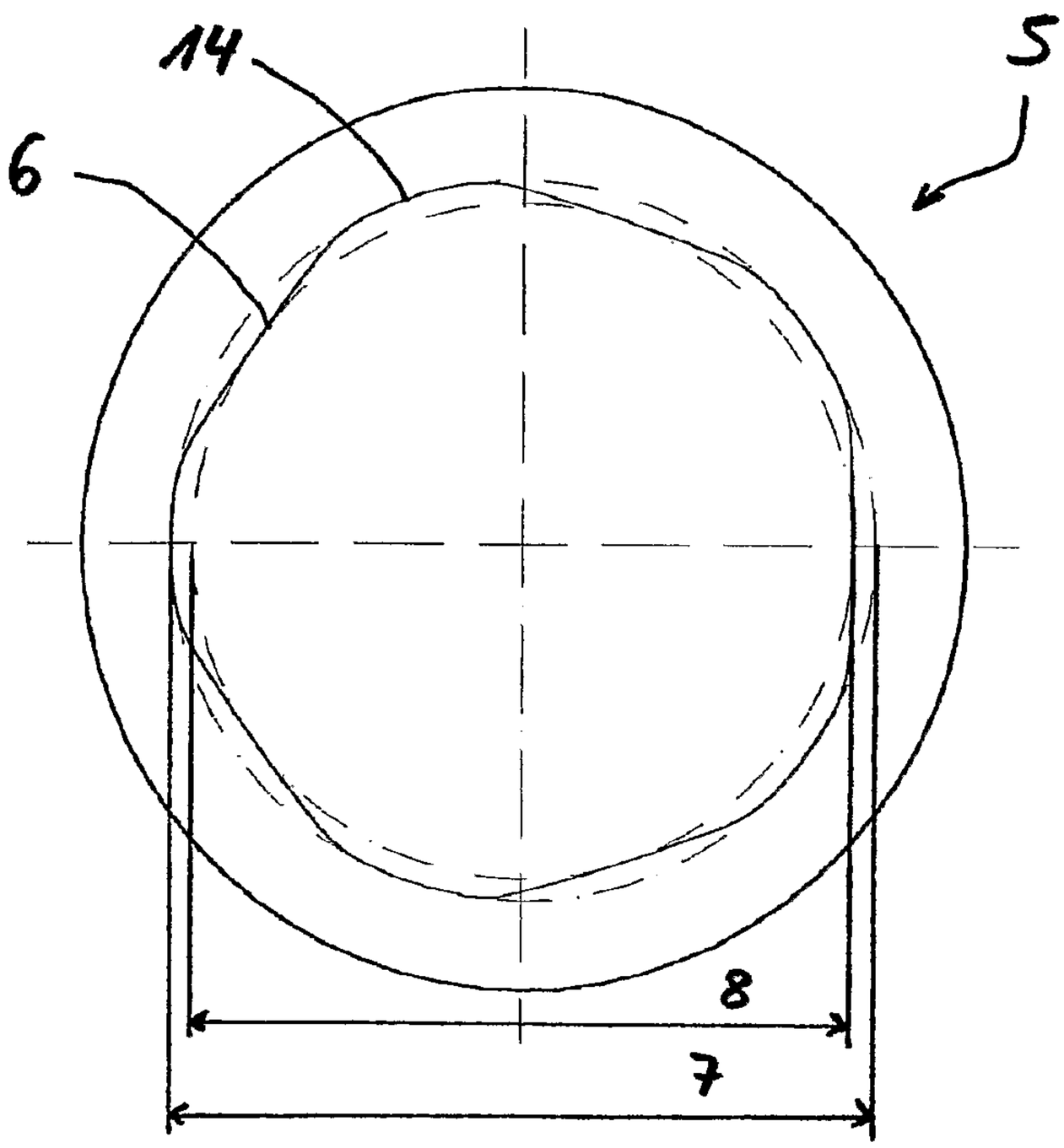


(57) Abrégé/Abstract:
The invention relates to a porous plain bearing (5) for engines and gearboxes, comprising a circular borehole (14) provided with highly compressed, at least approximately closed-pore regions (9) and low-compressed, open-pore regions (10) which are alternately distributed over the circumference, the borehole diameter of the highly compressed and low-compressed regions (9, 10) being at least approximately identical. The invention also relates to a method and a device for the production of said porous plain bearing.

CA 2519005 A1 2004/09/30

(21) 2 519 005

(13) A1

(72) **Inventeurs(suite)/Inventors(continued)**: GOLLER, KURT, DE; HECHER, HEINRICH, DE

(12) NACH DEM VERTRAG ÜBER DIE INTERNATIONALE ZUSAMMENARBEIT AUF DEM GEBIET DES PATENTWESENS (PCT) VERÖFFENTLICHTE INTERNATIONALE ANMELDUNG

(19) Weltorganisation für geistiges Eigentum
Internationales Büro

(43) Internationales Veröffentlichungsdatum
30. September 2004 (30.09.2004)

PCT

(10) Internationale Veröffentlichungsnummer
WO 2004/083662 A1

(51) Internationale Patentklassifikation[7]: F16C 33/10, 33/14, 33/24

(21) Internationales Aktenzeichen: PCT/EP2004/002729

(22) Internationales Anmeldedatum: 17. März 2004 (17.03.2004)

(25) Einreichungssprache: Deutsch

(26) Veröffentlichungssprache: Deutsch

(30) Angaben zur Priorität:
103 12 873.5 22. März 2003 (22.03.2003) DE

(71) Anmelder *(für alle Bestimmungsstaaten mit Ausnahme von US)*: **GKN SINTER METALS GMBH** [DE/DE]; Krebsöge 10, 42477 Radevormwald (DE). **ROBERT BOSCH GMBH** [DE/DE]; Wernerstrasse 1, 70469 Stuttgart-Feuerbach (DE).

(72) Erfinder; und

(75) Erfinder/Anmelder *(nur für US)*: **VOGT, Andreas** [DE/DE]; Kiebitzweg 8, 71272 Renningen (DE). **DORNHÖFER, Gerd** [DE/DE]; Balinger Strasse 37, 71229 Leonberg (DE). **KOCH, Hans-Peter** [DE/DE]; Schützenbühl Strasse 1, 70435 Stuttgart (DE). **STEHR, Werner** [DE/DE]; Nordstädter Strasse 26, 72160 Horb-Ahldorf (DE). **MESSNER, Christina** [DE/DE]; Herzog Sigmund Strasse 3, 39031 Bruneck (DE). **KRONBICHLER, Peter** [DE/DE]; T.Th Niederbacher 23, 39031 Reischach/Bruneck (DE). **GOLLER, Kurt** [DE/DE]; Kehlburgweg Nr. 16, 39031 St. Georgen/Bruneck (DE). **HECHER,**

*[Fortsetzung auf der nächsten Seite]*

(54) Title: POROUS PLAIN BEARING WITH CONTINUOUS VARIATION OF THE BOREHOLE COMPRESSION

(54) Bezeichnung: SINTERGLEITLAGER MIT KONTINUIERLICHER VARIATION DER BOHRUNGSVERDICHTUNG

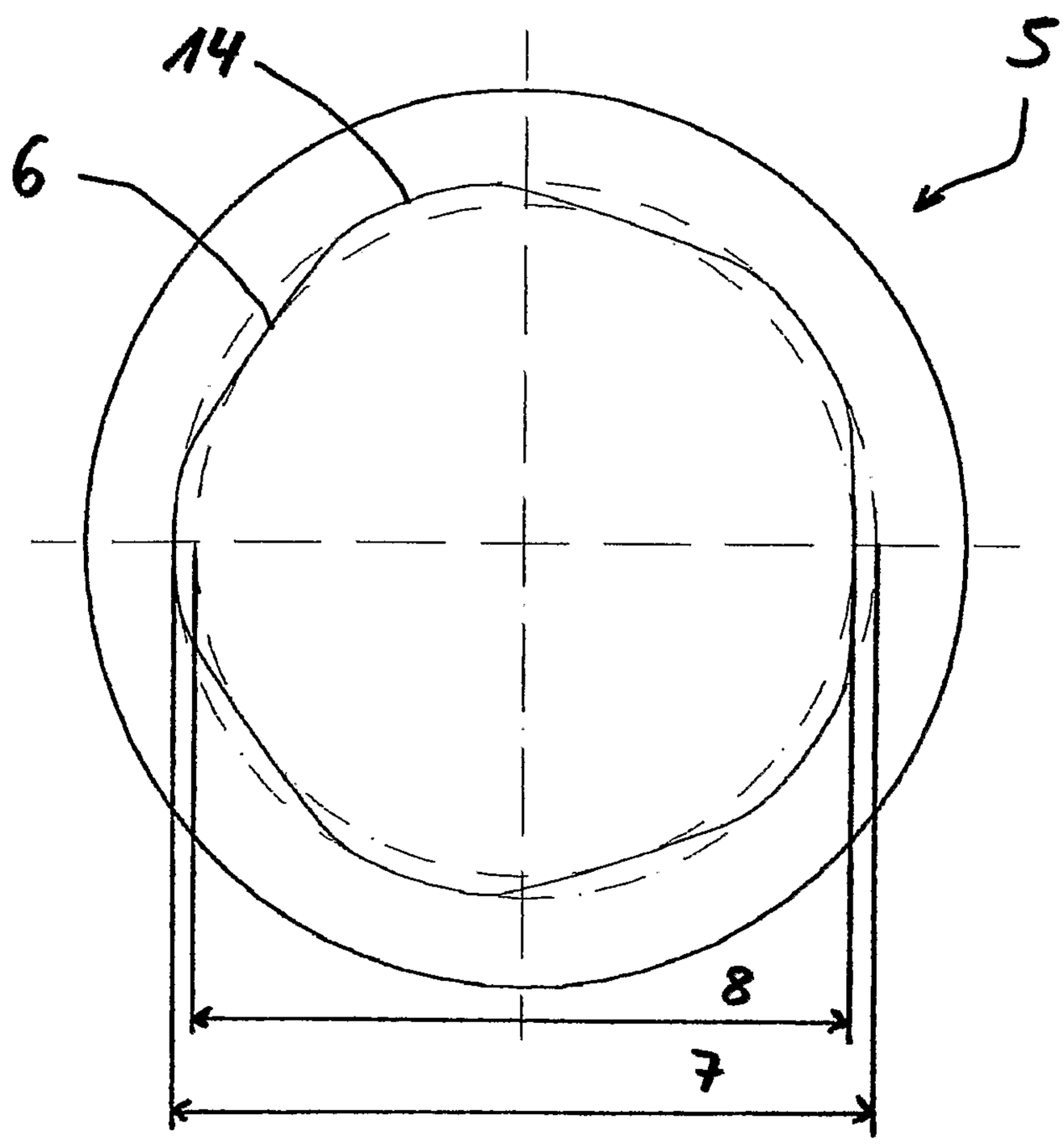


(57) Abstract: The invention relates to a porous plain bearing (5) for engines and gearboxes, comprising a circular borehole (14) provided with highly compressed, at least approximately closed-pore regions (9) and low-compressed, open-pore regions (10) which are alternately distributed over the circumference, the borehole diameter of the highly compressed and low-compressed regions (9, 10) being at least approximately identical. The invention also relates to a method and a device for the production of said porous plain bearing.

(57) Zusammenfassung:
Die Erfindung betrifft ein Sintergleitlager (5) für Motoren und Getriebe mit einer kreisrunden Lagerbohrung (14), bei dem die Lagerbohrung (14) über den Umfang verteilt abwechselnd hoch verdichtete zumindest annähernd geschlossenporige Bereiche (9) und niedrig verdichtete, offenporige Bereiche (10) aufweist, wobei der Lagerbohrungsdurchmesser der hoch und niedrig verdichteten Bereiche (9, 10) zumindest annähernd identisch ist sowie ein Verfahren und Vorrichtung zu dessen Herstellung.

WO 2004/083662 A1

WO 2004/083662 A1

**Heinrich** [DE/DE]; Im Nauraut Nr. 26, 39030 Antholz Mittertal (DE).

**(74) Anwalt: MAXTON LANGMAACK & PARTNER**; Postfach 51 08 06, 50944 Köln (DE).

**(81) Bestimmungsstaaten** *(soweit nicht anders angegeben, für jede verfügbare nationale Schutzrechtsart)*: AE, AG, AL, AM, AT, AU, AZ, BA, BB, BG, BR, BW, BY, BZ, CA, CH, CN, CO, CR, CU, CZ, DE, DK, DM, DZ, EC, EE, EG, ES, FI, GB, GD, GE, GH, GM, HR, HU, ID, IL, IN, IS, JP, KE, KG, KP, KR, KZ, LC, LK, LR, LS, LT, LU, LV, MA, MD, MG, MK, MN, MW, MX, MZ, NA, NI, NO, NZ, OM, PG, PH, PL, PT, RO, RU, SC, SD, SE, SG, SK, SL, SY, TJ, TM, TN, TR, TT, TZ, UA, UG, US, UZ, VC, VN, YU, ZA, ZM, ZW.

**(84) Bestimmungsstaaten** *(soweit nicht anders angegeben, für jede verfügbare regionale Schutzrechtsart)*: ARIPO (BW, GH, GM, KE, LS, MW, MZ, SD, SL, SZ, TZ, UG, ZM, ZW), eurasisches (AM, AZ, BY, KG, KZ, MD, RU, TJ, TM), europäisches (AT, BE, BG, CH, CY, CZ, DE, DK, EE, ES, FI, FR, GB, GR, HU, IE, IT, LU, MC, NL, PL, PT, RO, SE, SI, SK, TR), OAPI (BF, BJ, CF, CG, CI, CM, GA, GN, GQ, GW, ML, MR, NE, SN, TD, TG).

**Erklärungen gemäß Regel 4.17:**

— *Erfindererklärung (Regel 4.17 Ziffer iv) nur für US*
— *Erfindererklärung (Regel 4.17 Ziffer iv) nur für US*
— *Erfindererklärung (Regel 4.17 Ziffer iv) nur für US*
— *Erfindererklärung (Regel 4.17 Ziffer iv) nur für US*

**Veröffentlicht:**

— *mit internationalem Recherchenbericht*
— *vor Ablauf der für Änderungen der Ansprüche geltenden Frist; Veröffentlichung wird wiederholt, falls Änderungen eintreffen*

*Zur Erklärung der Zweibuchstaben-Codes und der anderen Abkürzungen wird auf die Erklärungen ("Guidance Notes on Codes and Abbreviations") am Anfang jeder regulären Ausgabe der PCT-Gazette verwiesen.*

# Sintered plain bearing with continual variation of the bore densification

## Description

The invention relates to a sintered plain bearing for motors and gear boxes.

Sintered plain bearings are often used in motors and gear boxes in which case these are cost efficient in production and simple in use. The limits of the fields of application of conventional sintered bearings are given by the maximum radial loads in which case the radial loads depend on the other parameters of the bearing such as, for example, the sintered materials, sliding velocities, lubricants, operating temperatures, etc. In contrast to sintered plain bearings, solid plain bearings can as a rule be used with higher radial loads and sliding velocities since the lubrication film built up between the shaft and the bearing can separate the two friction partners also with high loads. This functions with sintered plain bearings only to a limited extent since the lubricant at sufficiently high pressures is forced into the pores of the sintered material. This can result in solid contact between bearing and shaft, to increased friction, increased wear and ultimately to failure of the sintered plain bearing.

From the prior art a sintered plain bearing according to DE 199 37 567 is, among other things, known which has a bearing bore with alternately distributed over the circumference, highly densified small-pored sliding surfaces and axially extending low-densified, open-pored lubricant depots in which case the lubricant depots are formed by grooved structures with at least two longitudinal grooves. Such sintered plain bearings are disadvantageous to the effect that during certain operating conditions this leads to a comparatively high noise development and because during operation the oil film on the grooves can be stripped off and due to this supplying the bearing clearance with lubricant is not ensured any more.

This also applies to a sintered plain bearing according to DE 199 47 462 in which the grooves are inclined at an acute angle to the centre axis of the bearing bore. Also DE 101 07 485 shows a sintered plain bearing with the above-mentioned disadvantages.

In the case of corresponding sintered plain bearings according to the prior art, the sliding surfaces have during operation a so-called hydrodynamic lubrication in which case, because of the building pressure, a separating lubricant film forms between the shaft and the bearing. In the area of the open-pored zones, however, the lubricant film is forced into the open pores of the sintered material so that the shaft in these areas is operated in the so-called mixed friction state. In this operating condition both the friction and the wear of the bearing are, among other things, higher than during the hydrodynamic operation.

The object of the invention is to approximate the advantages of the solid bearing (low friction coefficients, high load-carrying capacity, high sliding velocities) with sintered plain bearings while maintaining the advantages of the sintered plain bearings (life, lubrication by the lubricant deposited in the sintered material).

The problem is solved according to the invention by a sintered plain bearing for motors and gear boxes with a circular bearing bore in which the bearing bore has alternately distributed over the circumference highly densified, at least approximately closed-pored zones and low-densified, open-pored zones in which case the diameter of the bearing bore of the highly and low-densified zones is at least approximately identical. The highly densified zones act as track for a shaft or axle carried in the bearing bore. In the highly densified zones the pores between the powder particles are nearly or completely closed so that the sintered plain bearings according to the invention, similarly to the solid bearings, can be used at least with higher radial loads and sliding velocities than conventional

sintered plain bearings since the lubricant at high pressures cannot be forced between the pores of the sintered material in the highly densified zones. In contrast to the sintered plain bearings according to the prior art, hydrodynamic lubrication is reached already at low rotational speeds. Thus, the sintered plain bearings according to the invention can be used at low rotational speeds at which known sintered plain bearings still run in the mixed frictional state whereby greater wear occurs. Solid body contact between bearing and shaft, which would lead to increased friction, increased wear and ultimately to the failure of the bearing, thus is prevented. Moreover, in contrast to sintered plain bearings according to the prior art, less viscous oil can be used since the oil in the highly densified zones cannot penetrate the almost closed pores. Due to this, the suitability of sintered plain bearings in particular for cold starts is increased since in the case of low temperatures around about -40°C and the use of highly viscous oil in standard sintered plain bearings, good operation is not ensured. In spite of the use of low viscous oil, sufficient load-carrying capacity is achieved. The existing low or not densified zones have the advantages of the known sintered plain bearing that lubricant can penetrate the pores so that the low densified zones also act as lubricant depots. Thus, lifetime lubrication is made possible by the lubricant deposited in the sintered material. The inhomogeneities of the track with regard to the high or low densification does not impair the lubricant supply of the bearing clearance and, above all, these inhomogeneities have no effect on the load directional neutrality of the bearing. According to the invention, it is provided that the diameter of the bearing bore of the highly and low-densified zones is at least approximately identical under which it is to be understood that no lubricant depots, available from the prior art in the form of grooves or slots, are provided. Any differences in the bearing bore diameter of the highly and low-densified zones result from manufacturing inaccuracies and are within the range of usual out of roundness. Because the bearing

bore diameter is almost nearly identical, the lubricant film cannot be stripped off at one step due to a continual change of the diameter as can take place in sintered plain bearings according to the prior art.

In an advantageous embodiment of the invention it is provided that the bearing bore diameter of the highly and low-densified zones is identical. Such an embodiment of the invention has the advantage that there is no step between low-densified and highly densified zones so that a stripping off of the lubricant film at the step or edge between the sliding surface and the lubricant depot cannot occur. The operating reliability and the life of the bearing is hereby increased.

In a particularly advantageous embodiment of the invention it is provided that the density over the circumference of the bearing bore is at least approximately varied continually between the highly and low-densified zones. In the low-densified zones the density corresponds at least approximately to the base density of the bearing. In the zone of the highest density nearly all pores are closed so that at the bearing surface nearly the full density of the material is achieved. From the bore outwards the density decreases again until, after a few tenths of a mm, it reaches again the value of the base density of the bearing. The sintered plain bearing according to the invention, has a continual variation of the densification in the zone of the bearing bore between the highly and low-densified zones in which case the variation of the densification depends on the type of bore profile and the extent of the material displacement. It is essential that no sudden change of the densitification takes place between the highly and low-densified zones which is the case with the sintered plain bearings known from the prior art.

In another advantageous embodiment according to the invention, it is provided that the sintered plain bearing has at least two highly densified at least approximately closed-

pored zones. It is particularly advantageous if the number is determined in such a way that an adequate functionality of the sintered plain bearing is produced for all load directions. The sintered plain bearings according to the invention, have the advantage that the entire sintered plain bearing acts as lubricant depot since oil is deposited in the pores and can emerge in the low-densified zones.

In an advantageous embodiment of the invention it is provided that the bore, at least over a part of the width of the bearing, has highly densified at least nearly closed-pored zones and/or low-densified, open-pored zones. The highly densified and low-densified zones can extend from one bearing edge to the opposite bearing edge or only over a part of the bearing width. The width of the highly densified zones and their distance to one another can be variable. The distances and widths do not have to be constant in a bearing either, but can, for example, be statistically varied.

In a particularly advantageous embodiment of the invention it is provided that the bore, at least over half of the bearing width, has highly densified, at least nearly closed-pored zones and/or low-densified, open-pored zones. A variation of the densification in axial direction and not only in circumferential direction is advantageous since due to the inhomogeneous densification over the circumference of the bore, zones with different load-carrying capacity are formed, that is to say, high carrying capacity in the very densified zones, somewhat less carrying capacity in the low-densified zones. Due to this, in (sic) dependence of the operability of the sintered bearing on the load-carrying direction is prevented. In regard to so-called edge runners, it is especially advantageous if the number of the densification zones is uneven so that non-coaxially mounted shafts, at the edge of the bearing, do not rest exclusively on low-densified zones. It has also been shown that by means of an uneven number of densification zones, the noise performance of the bearing is better than with an even number of densification zones.

In another advantageous embodiment of the invention it is provided that the highly densified, at least nearly closed-pored zones and the low-densified, open-pored zones are staggered.

In a particularly advantageous embodiment of the invention it is provided that in each case a low-densified, open-pored zone is arranged axially opposite a highly densified, at least nearly closed-pored zone. In the case of densification zones staggered in the axial direction, in which case a highly densified zone is opposite a low-densified zone, a shaft located in the bearing will always rest on a highly densified zone.

The problem is also solved by means of a method for producing a sintered plain bearing in which case powder is filled in a die, a green body with a bore with an approximate sinusoidal profile in the circumferential direction is produced by means of pressing, the green body is sintered and finally the approximate sinusoidal profile of the bore is formed to a circular bore geometry by means of calibration. In so doing, it is advantageous if no material displacement takes place in the low-densified zones during the calibration process. The density in the low-densified zones corresponds here to the base density of the bearing, for example, 6.0 g/cm$^3$ for an iron bearing. The maximum material displacement takes place in the area of the highest density in which case it is the objective to close all pores. Thus, one obtains at the surface of the bore the almost full density of the material. From the bore outwards the density decreases again until, after a few tenths of a mm, it reaches again the value of the base density of the bearing. In the case of a sintered plain bearing according to the invention, with a bore diameter of 8 mm, a material displacement during the calibration process takes place in the radial direction by about 100-300 µm. These values still can be adapted to the material or to the bore diameter. By means of the method according to the invention, a sintered plain bearing is produced with a continual variation of the densification in

the area of the bearing bore in which case the variation and the strength of the densification depend on the type of bore profile and the extent of the material displacement.

The shaping mandrel according to the invention is of sinusoidal profile in the circumferential direction and the upper and lower punch according to the invention have an identical profile. One obtains hereby a bore geometry of the green body which varies in the circumferential direction. The sinusoidal profile has in this case at the deepest points a bottom circle (smallest bearing bore diameter) and at the highest points a top circle (largest bearing bore diameter). The difference between the diameter of the bottom circle and of the top circle of the sinusoidal profile gives the degree of displacement of the material during the calibration. The diameter of the calibration mandrel is adapted to the top circle of the bore profile of the green body by means of the dimensional variations during the sintering. Thus, those zones in the bore are densified of which the diameter is smaller than the top circle diameter and a densification does not take place, or only very slightly, in the area of the bottom circle. At the location of the highest densification almost all pores are closed.

In an advantageous embodiment of the invention it is provided that powder is filled in a die, a green body with a bore with an approximate sinusoidal profile in the circumferential direction is produced by means of pressing in which case a sinusoidal profile, staggered at an angle to the other sinusoidal profile, is pressed into each half of the bearing, the green body is sintered and finally the approximate sinusoidal profile of the bore is formed to a circular bore geometry by means of calibration.

In a particularly advantageous embodiment of the invention it is provided that the powder in the low-densified zones is densified approximately to the base density of the sintered plain bearing and in the highly densified zones approximately to the density of the bearing material. It is

hereby obtained that the pores in the low-densified zone remain open so that lubricant can be stored. The impregnation of the bearing with lubricants can, for example, take place under vacuum.

In another advantageous embodiment of the invention it is provided that the powder is densified in radial direction by 100 to 300 µm. Hereby an at least approximately complete closing of the pores in the highly densified zones is achieved.

The problem is also solved by a device for producing a sintered plain bearing and for implementing the method according to the invention, in which case a pressing tool is provided that consists of a die and a shaping mandrel profiled on the outer circumference to which an upper and lower punch with an identical profile are arranged in which case the profiling of the mandrel and the punch is a sinusoidal profile in the circumferential direction.

In a particularly advantageous embodiment of the invention it is provided that a pressing tool is provided that comprises a die, that it comprises a die and an upper and lower shaping mandrel profiled on the outer circumference, to which an upper and lower punch with an identical profile is arranged, in which case the profiling is a sinusoidal profile in circumferential direction and the upper shaping mandrel and the upper punch are arranged, rotated at an angle, to the lower shaping mandrel and the lower punch.

The invention is shown with the aid of schematic drawings of exemplified embodiments. Here

Fig. 1 shows a sintered plain bearing according to the prior art,

Fig. 2 shows bearing bore of a sintered plain bearing according to the invention after the sintering,

Fig. 3 shows bearing bore of a sintered plain bearing

according to the invention after the calibration,

Fig. 4 shows development of a bearing bore with differently densified zones without axial variations,

Fig. 5 shows development of a bearing bore with differently densified zones with overlapping axial variation,

Fig. 6 shows development of a bearing bore with differently densified zones without overlapping axial variation,

Fig. 7 shows a section through a pressing device according to the invention in the filling state and

Fig. 8 shows a section through a pressing device according to the invention in the ejection state.

Fig. 1 shows a sintered plain bearing 1 according to the prior art, for example, DE 199 37 567, DE 199 47 462 and DE 101 07 485, in which case between the highly densified zones 2 and the low-densified zones 3 there is a transition with a step 4 in which case the step is disadvantageous to the effect that during operation the oil film can be stripped off at the step 4 and that then the supply of the bearing clearance with lubricant is not ensured any more.

Fig. 2 shows the bearing bore 14 of the sintered plain bearing 5 according to the invention after the sintering. The sinusoidal profile 6 of the bearing bore 14 is introduced in the forming process and has in this case at the deepest points a bottom circle 7 (smallest bearing bore diameter) and at the highest points a top circle 8 (greatest bearing bore diameter). The difference between the diameter of the bottom circle 7 and of the top circle 8 of the sinusoidal profile 6 gives the degree of displacement of the material during the calibration. The diameter of the calibration mandrel is adapted to the top circle 8 of the bore profile of the green body by means of the dimensional variations during the sintering. Thus, those zones in the bore are densified of which the diameter is smaller than the top circle 8 and a

densification in the area of the bottom circle 7 does not take place, or only very slightly. At the location of the greatest densification nearly all pores are closed.

Fig. 3 shows the bearing bore 14 of the sintered plain bearing 5 according to the invention, after the calibration in which case the sinusoidal profile 6 of the bearing bore 14 according to Fig. 2 was formed to a circular bearing bore 14 by the calibration.

Fig. 4 shows the development of the bearing bore 14 according to the invention, with differently densified zones 9, 10 in which case the hatched zones represent the higher densified zones 10. The low-densified zones 11 are not hatched. The zones with the different densification extend from the upper 12 to the lower bearing edge 13.

Fig. 5 shows the development of the bearing bore 14 according to the invention, with differently densified zones 9, 10 in which case from half of the bearing width b the densification zones are rotated at an arbitrary angle towards one another. It can hereby be ensured that a not shown shaft located in the bearing 5 always will be resting on a highly densified zone 9 in a bearing half.

Fig. 6 shows a development of the bearing bore 14 according to the invention, with differently densified zones 9, 10 in which case, unlike Fig. 5, the highly densified and low densified zones 9, 10 respectively do not overlap any more in axial direction. The width of the higher densified zones 9 and their distance to one another can be variable. The distances and widths do not have to be constant either in a bearing 5, but can, for example, be varied statistically. The minimum width of the low-densified zones 10 is set by production limits. If the number of the zones is increased and the bore diameter is reduced, more material is displaced in the zones of low density during the calibration. In the extreme case this leads to a closing of the pores. It follows hereby that the minimum width has to be selected in such a way that in the desired low-densified zones 10 the

pores are not closed in order to maintain the functionality as lubricant depot. For example, with a bore diameter of 8 mm the distance between two points of the greatest densification ought to be not less than 3.5 mm in circumferential direction.

Conditional upon that no material displacement is to take place in the low-densified zone during the calibration process, the density in the low-densified zone 10 corresponds to base density of the bearing 5, for example, 6.0 g/cm$^3$ for an iron bearing.

The maximum material displacement occurs in the zone of highest density 10 in which case the object is that all pores are closed. As a result of this, the nearly full density of the used material is achieved at the bore surface. From the bore inwards the density again decreases until it after a few tenths of a millimeter again reaches the value of the base density of the bearing. For example, in the case of a bore diameter of 8 mm a displacement of the material of 100 to 300 µm takes place in radial direction during the calibration process.

Fig. 7 shows a section through a pressing device 15 according to the invention in the filling state. The pressing device 15 comprises a die 16 with a hard metal insert 17. Furthermore, a lower punch 18 and an upper punch 19 are provided in which case the lower punch 18 has a bore 23 and the upper punch 19 a bore 20 with a sinusoidal profile. The lower punch 18 and the upper punch 19 are arranged with a shaping mandrel 21 which has an identical sinusoidal profile. In the filling state powder is filled in the mould space 22 which is formed by the hard metal insert 17, the lower punch 18 and the shaping mandrel 21. Compaction pressure is applied to the upper punch 19 and/or the lower punch 18 so that the powder is densified to a green body which, contingent on the sinusoidal profile of the shaping mandrel 21, of the lower punch 18 and of the upper punch 19 has a bearing bore 14 with a corresponding

sinusoidal profile 6.

Fig. 8 shows a section through a pressing device 15 according to the invention, on ejection of the ready-pressed green body which has a bearing bore 14 according to Fig. 2. On ejection, the upper punch 19 is pulled back from the die and the green body is ejected by means of the lower punch 18. The green body subsequently is sintered in which case, if necessary, formed flashes then are removed.

In the manufacture of the green body a bore geometry is produced with a sinusoidal profile 6 in the circumferential direction. The bore geometry with the sinusoidal profile in the circumferential direction allows that after the not shown sintering process, a circular bore geometry of the bearing bore 14 with differently densified zones 9, 10 is produced by means of the calibration process, by calibrating the bearing bore 14 with the sinusoidal profile 6 by means of a circular calibration mandrel so that a circular bearing bore 14 according to Fig. 3 is produced in the sintered plain bearing 5. The degree of densification of the highly densified zone 9 can be set by means of the dimensioning of the shaping tools such as, for example, upper punch 19 and shaping mandrel 21. An axial variation of the densification of the bearing bore 14 of the sintered plan bearing 5 according to Fig. 5 or Fig. 6 is introduced in the bore by means of two staggered shaping mandrels 21 and punch 19.

According to the invention, a green body is pressed by means of a compacting tool in which case the shaping mandrel 21 and the shaping punch 18, 19 have a geometry with a sinusoidal profile in the circumferential direction. Provided the densification in the bearing bore 14 also is to vary in the axial direction, two staggered shaping mandrels 21 and punches 18, 19 are used. The bearing bore 14 with the sinusoidal profile 6 in the circumferential direction is calibrated with a circular calibration mandrel for producing tight tolerances whereby the smooth sliding surface and the partly highly densified zones 9 of the bearing bore 14 are

produced. Finally, the bearing 5 is impregnated with lubricant under vacuum.

The sintered plain bearings 5 according to the invention can be used for the same application purposes as the sintered plain bearings known from the prior art. They can be used in particular for all types of electric motors in which case low viscous oils can be used whereby the "cold start" performance of a motor is improved. The sintered plain bearings according to the invention, run already at low rotational speeds in the hydrodynamic range and by means of the at least approximately circular bearing bore the stripping off of the lubricant film at edges of the lubricant depots is avoided.

Claims

1.) Sintered plain bearing (5) for motors and gear boxes with a circular bearing bore (14) in which the bearing bore (14) has alternately distributed over the circumference highly densified, at least approximately closed-pored zones (9) and low-densified, open-pored zones (10) in which case the bearing bore diameter of the highly and low-densified zones (9, 10) is at least approximately identical.

2.) Sintered plain bearing (5) according to claim 1, characterized in that the bearing bore diameter of the highly and low-densified zones (9, 10) is identical.

3.) Sintered plain bearing (5) according to claim 1 or 2, characterized in that the density over the circumference of the bearing bore is at least approximately varied continually between the highly and low-densified zones (9, 10).

4.) Sintered plain bearing (5) according to one of the claims 1 to 3, characterized in that the sintered plain bearing (5) has at least two highly densified, at least approximately closed-pored zones (9, 10).

5.) Sintered plain bearing (5) according to one of the claims 1 to 4, characterized in that the bearing bore (14) has at least over part of the bearing width (b) highly densified, at least approximately closed-pored zones (9) and/or low-densified, open-pored zones (10).

6.) Sintered plain bearing (5) according to one of the claims 1 to 5, characterized in that the bearing bore (14) has at least over half of the bearing width (b) highly densified, at least approximately closed-pored zones (9) and/or low-densified, open-pored zones (10).

7.) Sintered plain bearing (5) according to one of the claims 1 to 6, characterized in that the highly densified, at least approximately closed-pored zones (9) and the low-densified, open-pored zones (10) are staggered.

8.) Sintered plain bearing (5) according to one of the claims 1 to 7, characterized in that in each case a low-densified, open-pored zone (10) is arranged axially opposite a highly densified, at least nearly closed-pored zone (9).

9.) Method for producing a sintered plain bearing (5) according to one of the claims 1 to 8, characterized in that powder is filled in a die, a green body with a bore with an approximate sinusoidal profile in the circumferential direction is produced by means of pressing, the green body is sintered and finally the approximate sinusoidal profile of the bore is formed to a circular bore geometry by means of calibration.

10.) Method for producing a sintered plain bearing (5) according to one of the claims 1 to 9, characterized in that powder is filled in a die, a green body with a bore with an approximate sinusoidal profile in the circumferential direction is produced by means of pressing, in which case a sinusoidal profile, staggered at an angle to the other sinusoidal profile, is pressed into each half of the bearing, the green body is sintered and finally the approximate sinusoidal profile of the bore is formed to a circular bore geometry by means of calibration.

11.) Method for producing a sintered plain bearing (5) according to one of the claims 1 to 10, characterized in that the powder in the low-densified zones (10) is densified approximately to the base density of the sintered plain bearing (5) and in the highly densified zones (9) approximately to the density of the bearing material.

12.) Method for producing a sintered plain bearing (5) according to one of the claims 1 to 11, characterized in that the powder is densified in the radial direction by 100 to 300 µm.

13.) Device for producing a sintered plain bearing (5) and for implementing the method according to one of the claims 1 to 12, in which case a pressing tool is provided

that consists of a die and a shaping mandrel (21), profiled on the outer circumference, to which an upper (19) and lower punch (18) with an identical profile are arranged in which case the profiling of the shaping mandrel (21) and the punches (18, 19) is a sinusoidal profile in the circumferential direction.

14.) Device for producing a sintered plain bearing (5) and for implementing the method according to one of the claims 1 to 13, in which case a pressing tool is provided that consists of a die (16) and an upper and lower shaping mandrel, profiled on the outer circumference, to which an upper and lower punch (19, 18) with an identical profile are arranged in which case the profiling is a sinusoidal profile in the circumferential direction and the upper shaping mandrel and the upper punch are arranged, rotated at an angle, to the lower shaping mandrel and the lower punch.

Fig. 1

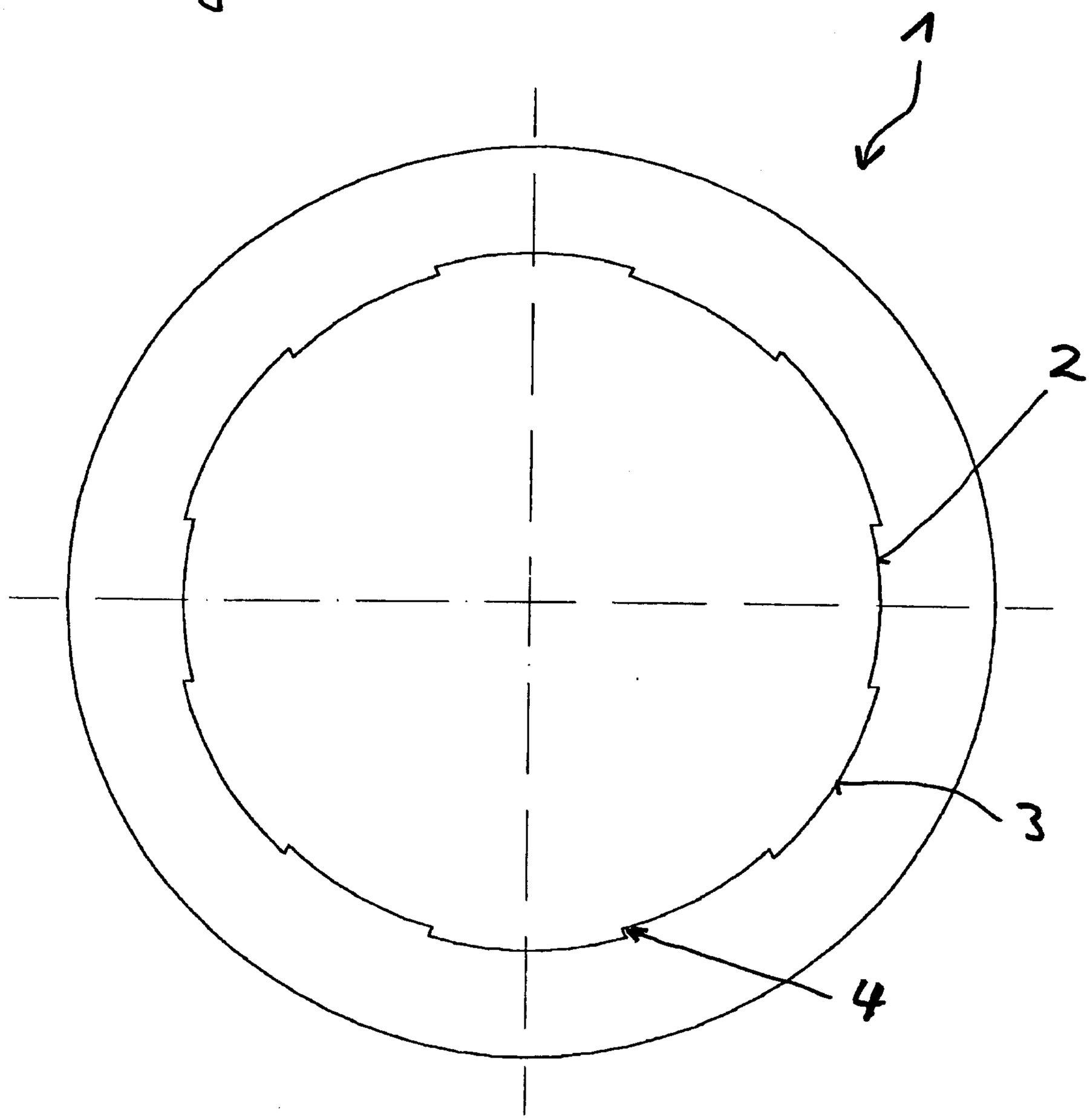

Fig. 2

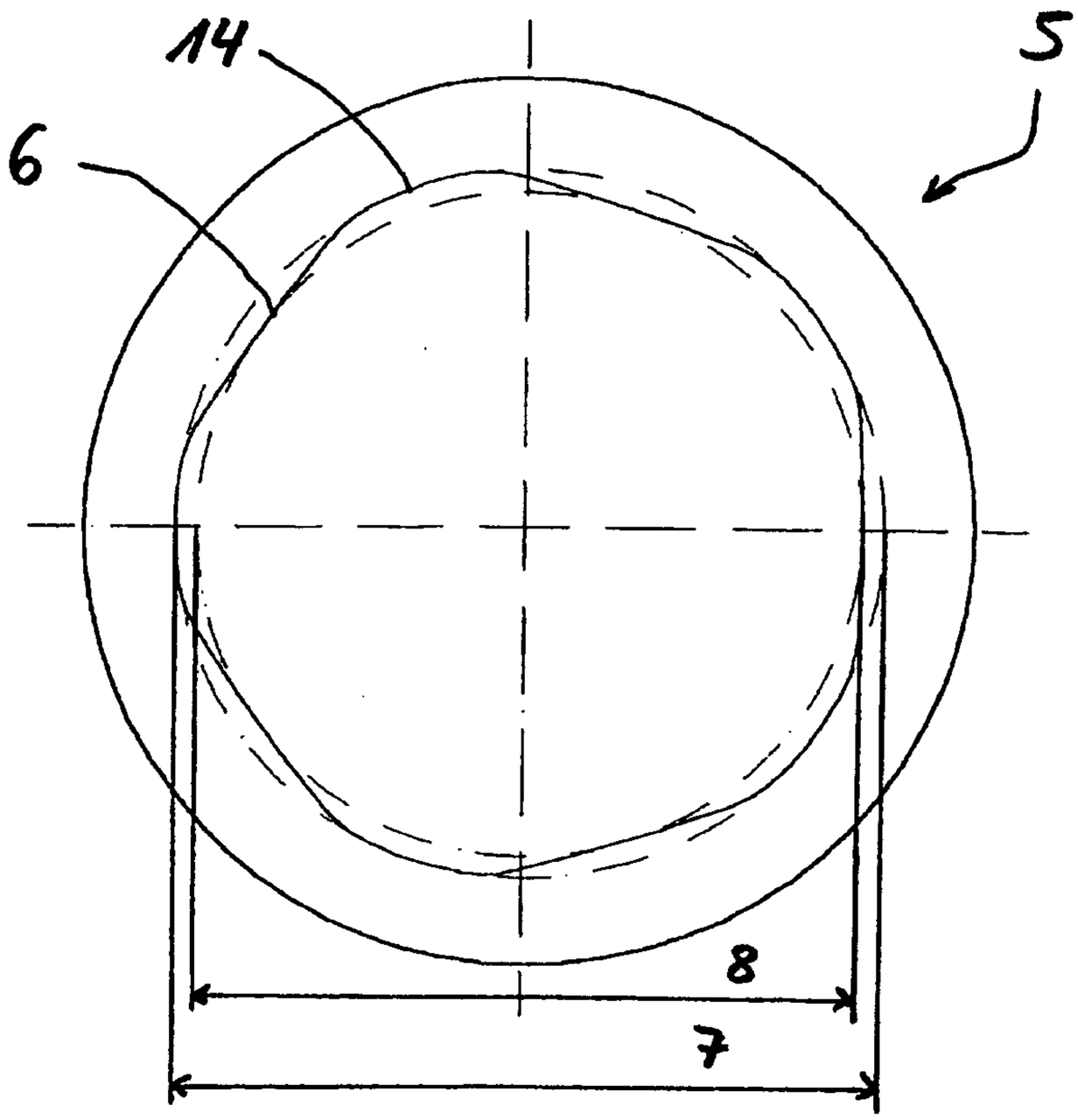


Fig. 3

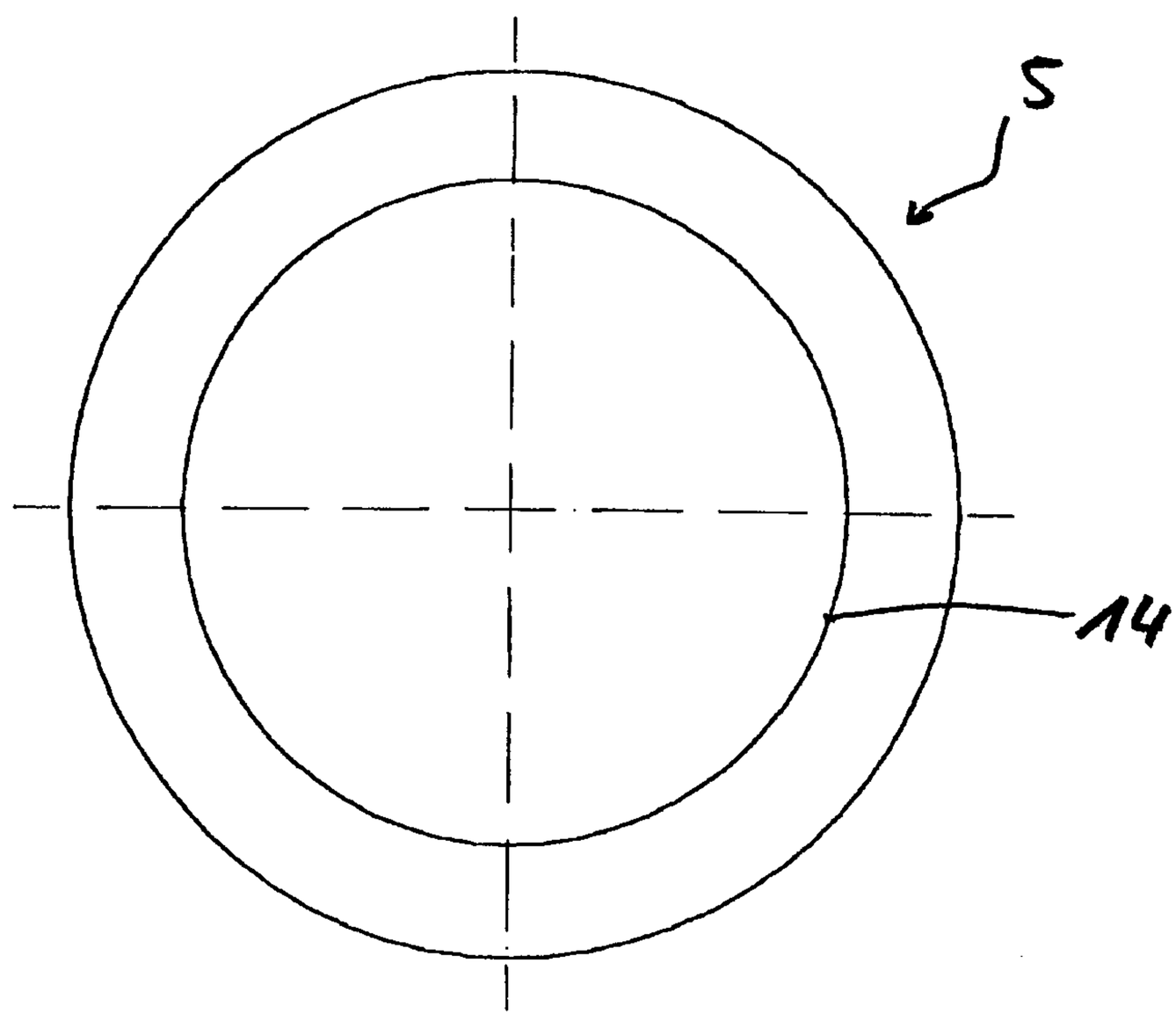

Fig. 4

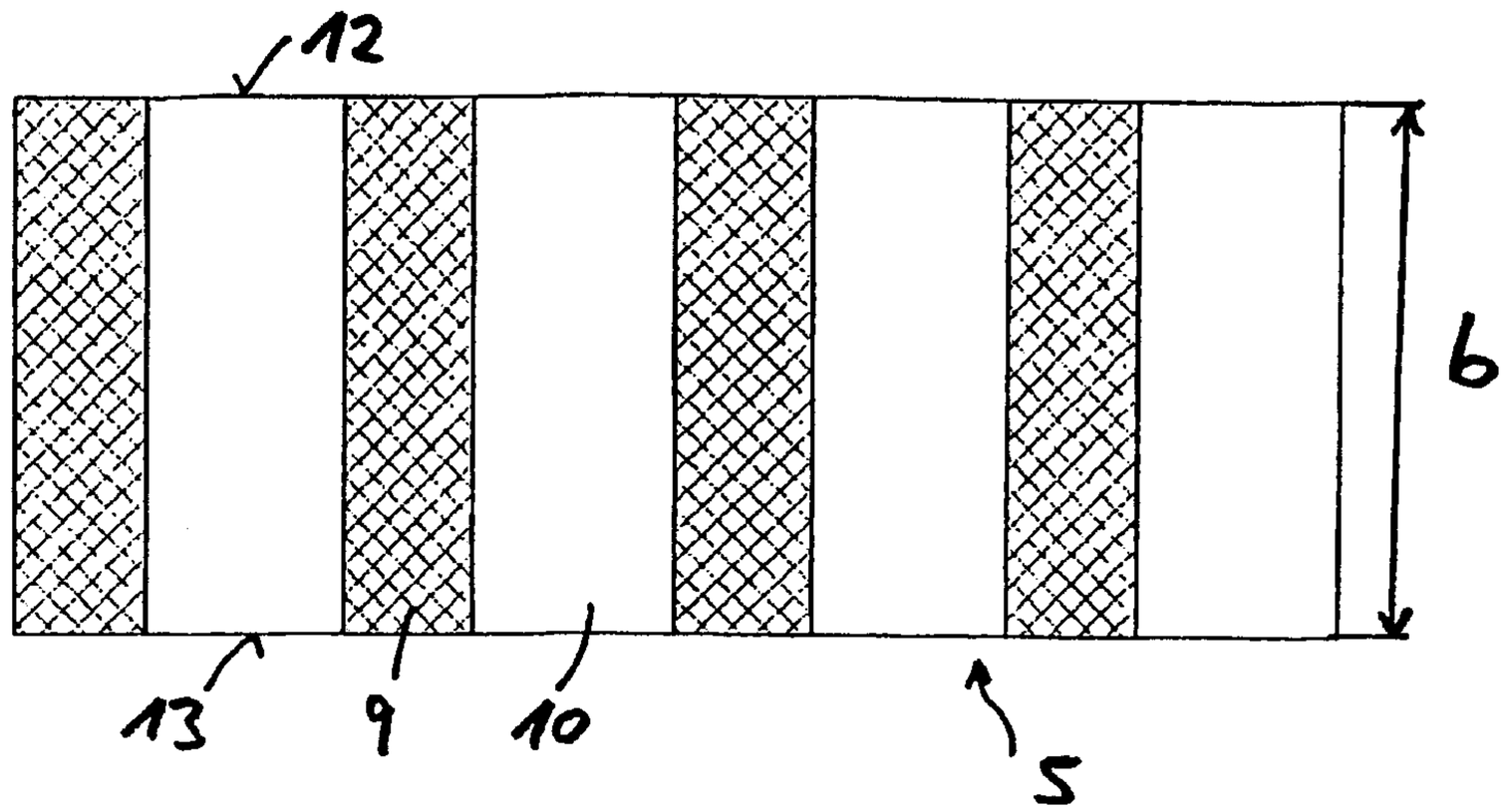


Fig. 5

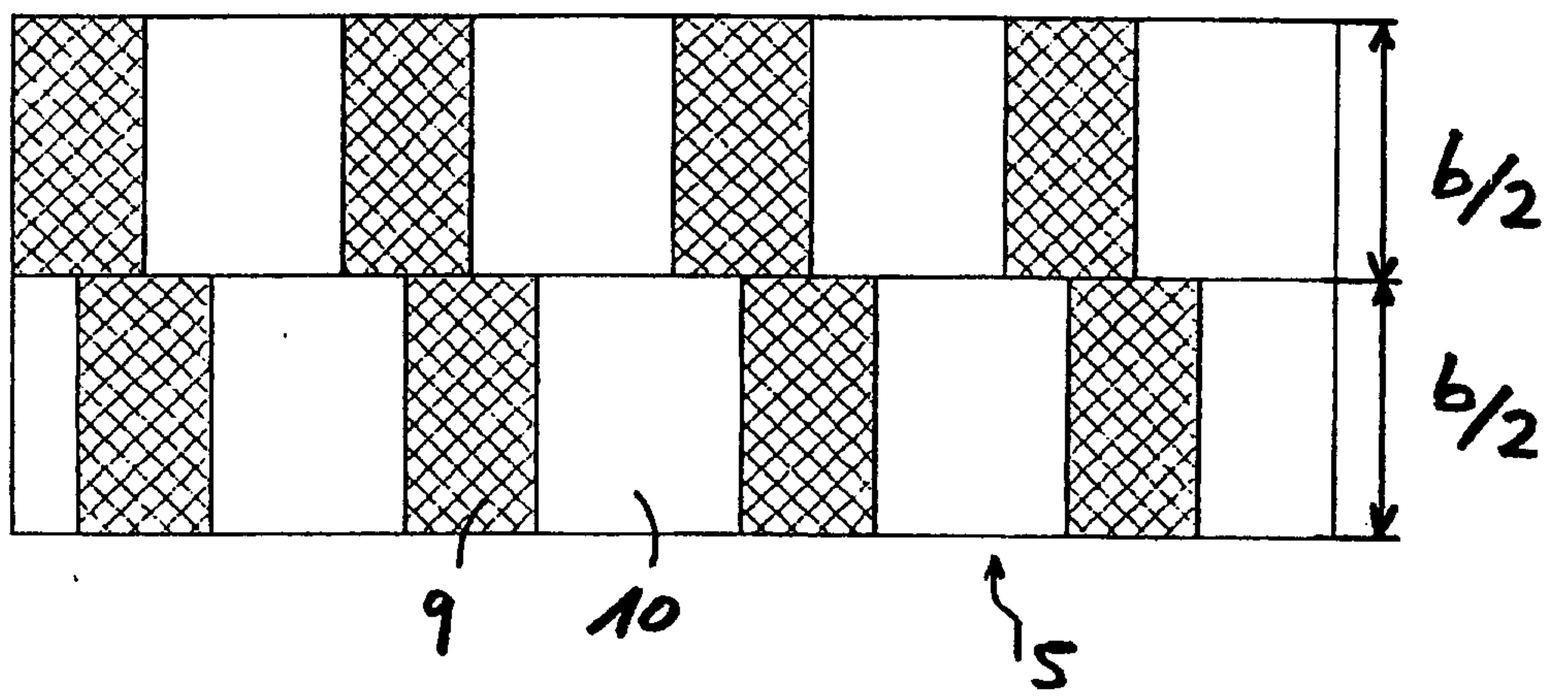


Fig. 6

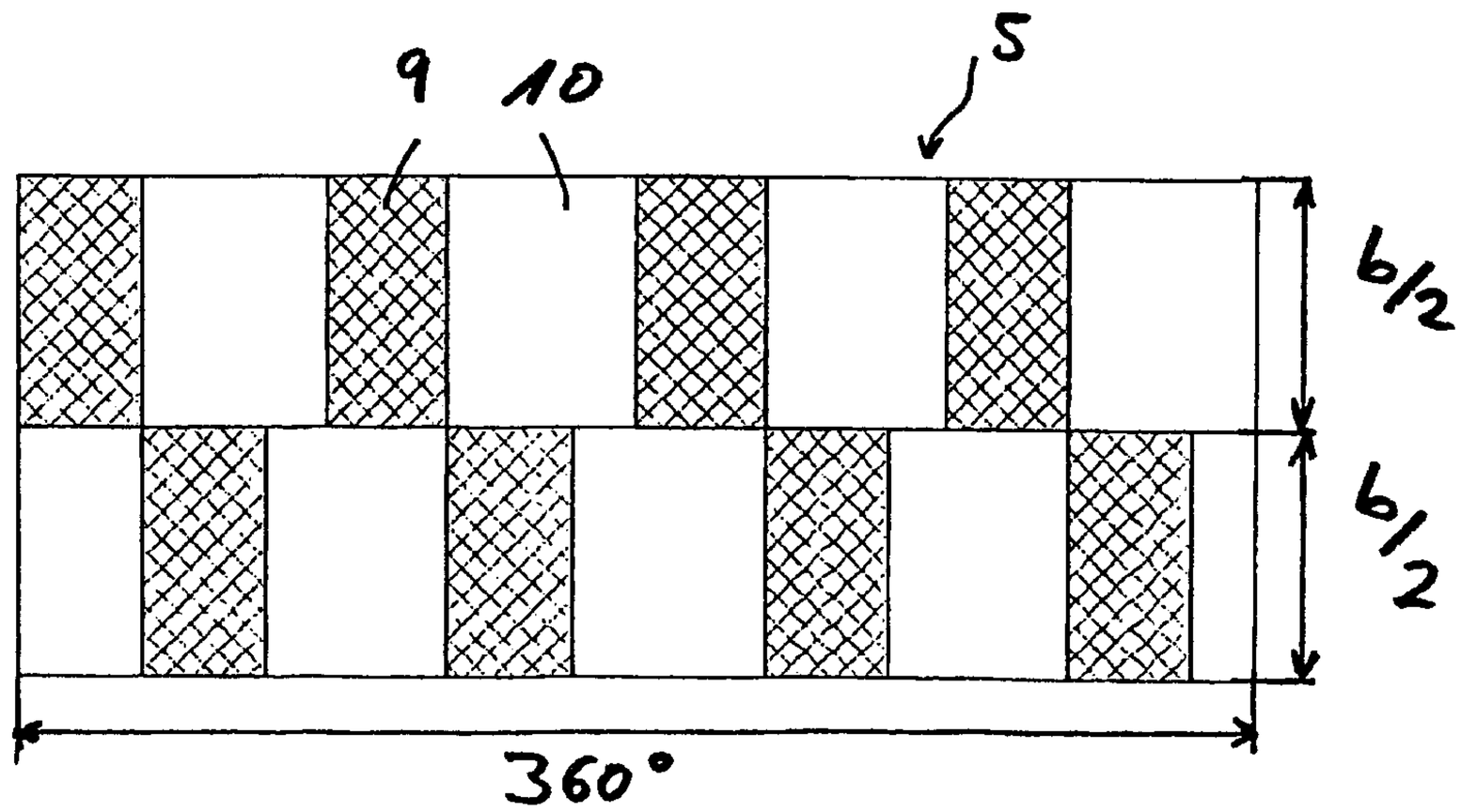

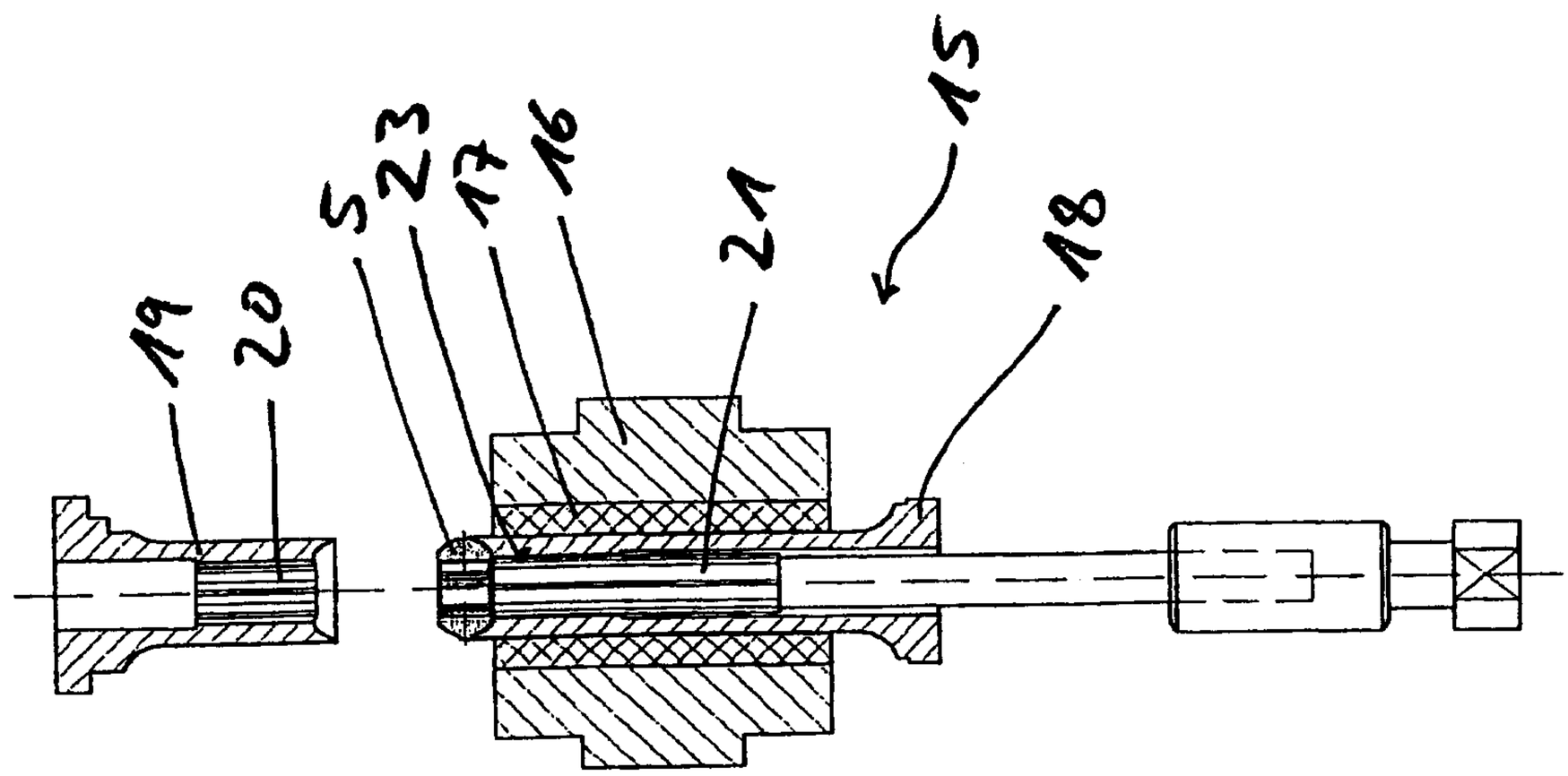


Fig. 8

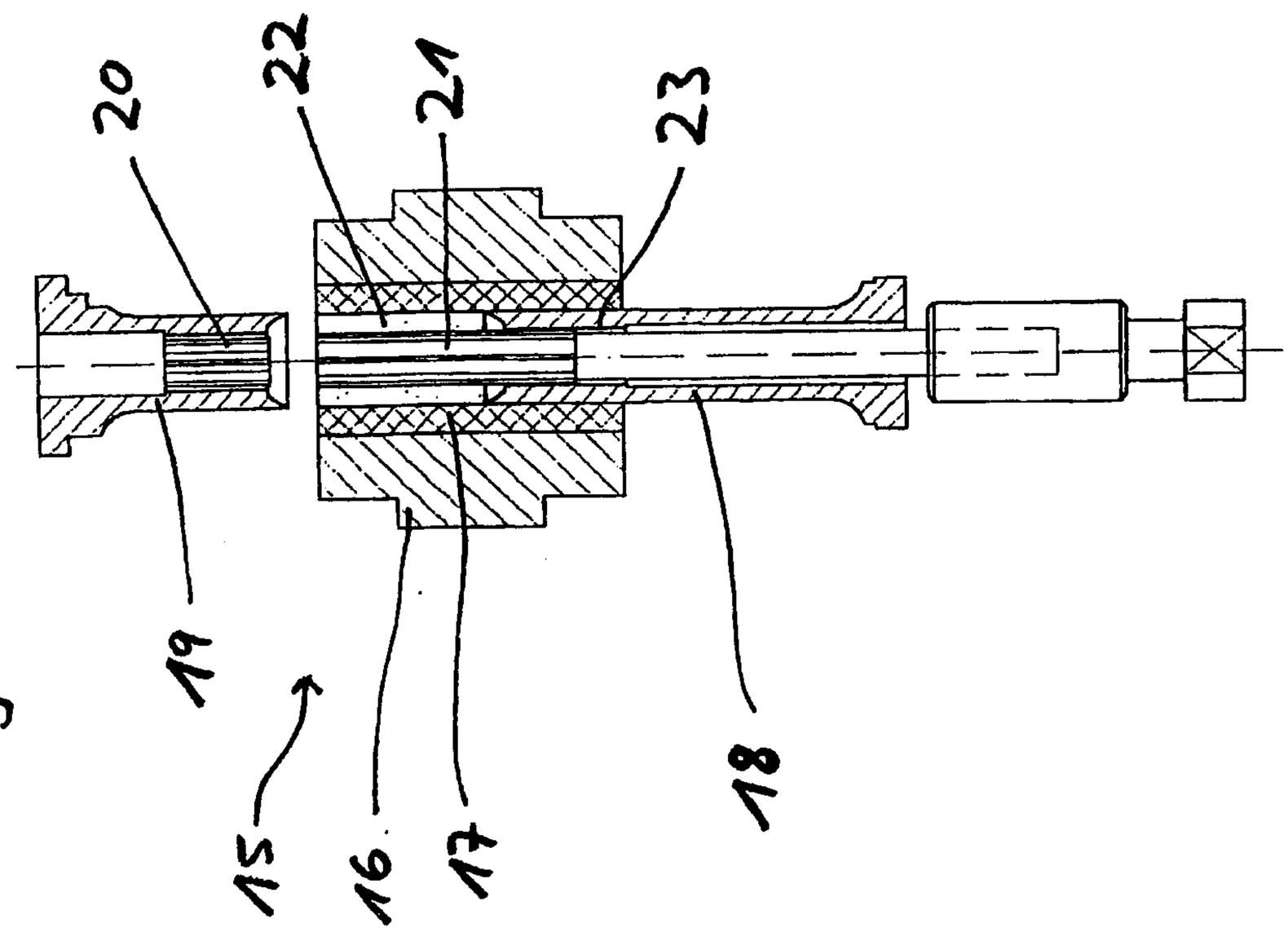


Fig. 7

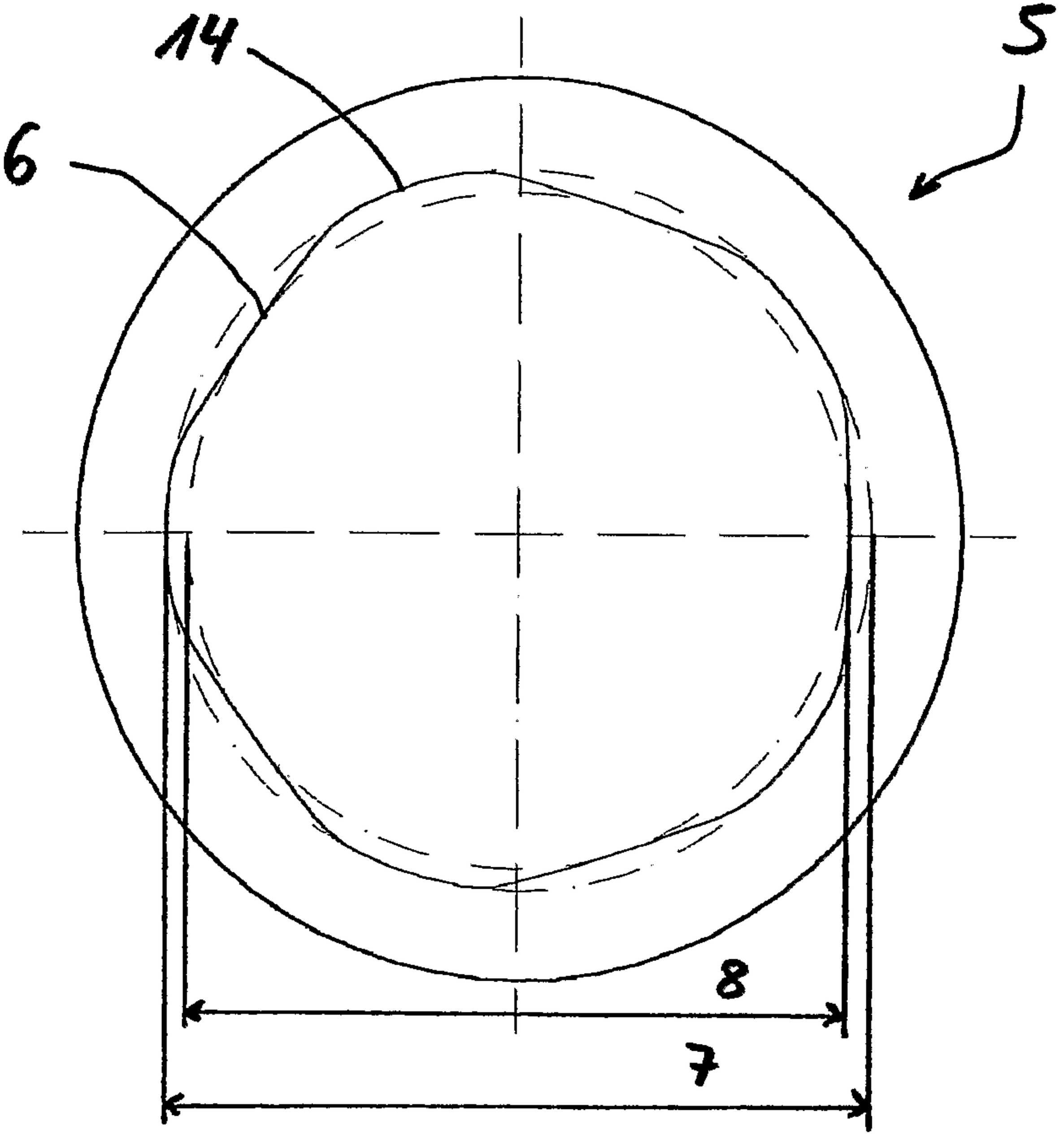
14
5
6
8
7