(12) INTERNATIONAL APPLICATION PUBLISHED UNDER THE PATENT COOPERATION TREATY (PCT)

(19) World Intellectual Property Organization
International Bureau

(43) International Publication Date
22 December 2022 (22.12.2022)

WIPO | PCT

(10) International Publication Number
WO 2022/264139 A1

(51) International Patent Classification:
*C08F 290/00* (2006.01) *B33Y 70/00* (2020.01)

(21) International Application Number:
PCT/IL2022/050639

(22) International Filing Date:
14 June 2022 (14.06.2022)

(25) Filing Language: English

(26) Publication Language: English

(30) Priority Data:
63/210,422 14 June 2021 (14.06.2021) US

(71) Applicant: **STRATASYS LTD.** [IL/IL]; 1 Holtzman Street, Science Park, P.O. Box 2496, 7612401 Rehovot (IL).

(72) Inventor: **KUNO, Lev**; 5/1 Kida Street, 9987500 Tzur-Hadassah (IL).

(74) Agent: **EHRLICH, Gal** et al.; G. E. EHRLICH (1995) LTD., 11 Menachem Begin Road, 5268104 Ramat-Gan (IL).

(81) Designated States *(unless otherwise indicated, for every kind of national protection available)*: AE, AG, AL, AM, AO, AT, AU, AZ, BA, BB, BG, BH, BN, BR, BW, BY, BZ, CA, CH, CL, CN, CO, CR, CU, CZ, DE, DJ, DK, DM, DO, DZ, EC, EE, EG, ES, FI, GB, GD, GE, GH, GM, GT, HN, HR, HU, ID, IL, IN, IQ, IR, IS, IT, JM, JO, JP, KE, KG, KH, KN, KP, KR, KW, KZ, LA, LC, LK, LR, LS, LU, LY, MA, MD, ME, MG, MK, MN, MW, MX, MY, MZ, NA, NG, NI, NO, NZ, OM, PA, PE, PG, PH, PL, PT, QA, RO, RS, RU, RW, SA, SC, SD, SE, SG, SK, SL, ST, SV, SY, TH, TJ, TM, TN, TR, TT, TZ, UA, UG, US, UZ, VC, VN, WS, ZA, ZM, ZW.

(84) Designated States *(unless otherwise indicated, for every kind of regional protection available)*: ARIPO (BW, GH, GM, KE, LR, LS, MW, MZ, NA, RW, SD, SL, ST, SZ, TZ, UG, ZM, ZW), Eurasian (AM, AZ, BY, KG, KZ, RU, TJ, TM), European (AL, AT, BE, BG, CH, CY, CZ, DE, DK, EE, ES, FI, FR, GB, GR, HR, HU, IE, IS, IT, LT, LU, LV, MC, MK, MT, NL, NO, PL, PT, RO, RS, SE, SI, SK, SM, TR), OAPI (BF, BJ, CF, CG, CI, CM, GA, GN, GQ, GW, KM, ML, MR, NE, SN, TD, TG).

**Published:**
— *with international search report (Art. 21(3))*
— *before the expiration of the time limit for amending the claims and to be republished in the event of receipt of amendments (Rule 48.2(h))*

(54) Title: FORMULATIONS FOR ADDITIVE MANUFACTURING OF ELASTOMERIC MATERIALS

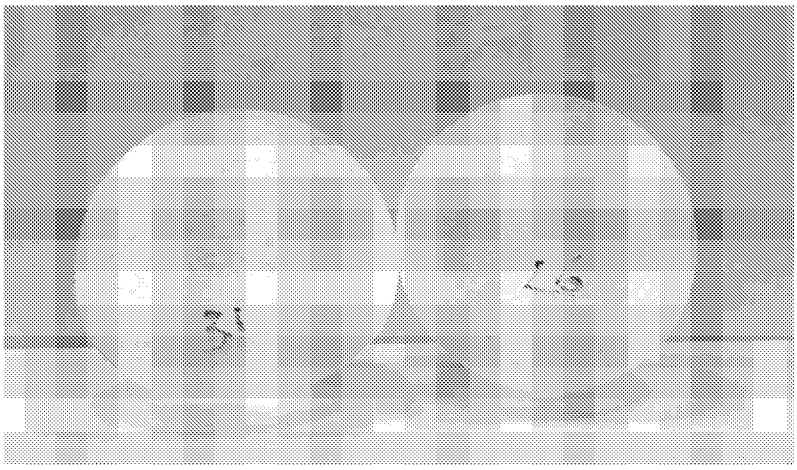

FIG. 7A

(57) Abstract: A curable formulation that provides, when hardened, an elastomeric material which is usable in additive manufacturing of a three-dimensional object is provided. The formulation is based on curable mono-functional and multi-functional elastomeric materials, in combination with a curable, multi-functional, non-elastomeric material and a curable material that comprises at least two hydrogen bond forming groups.

WO 2022/264139 A1

# FORMULATIONS FOR ADDITIVE MANUFACTURING OF ELASTOMERIC MATERIALS

## RELATED APPLICATION/S

This application claims the benefit of priority under 35 USC §119(e) of U.S. Provisional Patent Application No. 63/210,422 filed on June 14, 2021, the contents of which are incorporated herein by reference in their entirety.

## FIELD AND BACKGROUND OF THE INVENTION

The present invention, in some embodiments thereof, relates to additive manufacturing (AM), and, more particularly, but not exclusively, to formulations and methods usable in additive manufacturing of an object made, in at least a portion thereof, of elastomeric, rubber-like, material(s).

Synthetic rubbers are typically made of artificial elastomers. An elastomer is a viscoelastic polymer, which generally exhibits low Young's modulus and high yield strain compared with other materials. Elastomers are typically amorphous polymers existing above their glass transition temperature, so that considerable segmental motion is possible. At ambient temperatures, rubbers are thus relatively soft, featuring elasticity of about 3MPa, and deformable.

Elastomers are usually thermosetting polymers (or co-polymers), which require curing (vulcanization) for cross-linking the polymer chains. The elasticity is derived from the ability of the long chains to reconfigure themselves to distribute an applied stress. The covalent cross-linking ensures that the elastomer will return to its original configuration when the stress is removed. Elastomers can typically reversibly extend from 5 % to 700 %.

Rubbers often further include fillers or reinforcing agents, usually aimed at increasing their hardness. Most common reinforcing agents include finely divided carbon black and/or finely divided silica.

Both carbon black and silica, when added to the polymeric mixture during rubber production, typically at a concentration of about 30 percent by volume, raise the elastic modulus of the rubber by a factor of two to three, and also confer remarkable toughness, especially resistance to abrasion, to otherwise weak materials. If greater amounts of carbon black or silica particles are added, the modulus is further increased, but the tensile strength may be lowered.

Additive manufacturing is generally a process in which a three-dimensional (3D) object is manufactured utilizing a computer model of the objects. Such a process is used in various fields, such as design related fields for purposes of visualization, demonstration and mechanical prototyping, as well as for rapid manufacturing (RM).

The basic operation of any AM system consists of slicing a three-dimensional computer model into thin cross sections, translating the result into two-dimensional position data and feeding the data to control equipment which manufacture a three-dimensional structure in a layer-wise manner.

Various AM technologies exist, amongst which are stereolithography, digital light processing (DLP), and three-dimensional (3D) printing, 3D inkjet printing in particular. Such techniques are generally performed by layer by layer deposition and solidification of one or more building materials, typically photopolymerizable (photocurable) materials.

In three-dimensional printing processes, for example, a building material is dispensed from a dispensing head having a set of nozzles to deposit layers on a supporting structure. Depending on the building material, the layers may then be cured or solidified using a suitable device.

Various three-dimensional printing techniques exist and are disclosed in, *e.g.*, U.S. Patent Nos. 6,259,962, 6,569,373, 6,658,314, 6,850,334, 7,183,335, 7,209,797, 7,225,045, 7,300,619, 7,479,510, 7,500,846, 7,962,237 and 9,031,680, all of the same Assignee, the contents of which are hereby incorporated by reference.

A printing system utilized in additive manufacturing may include a receiving medium and one or more printing heads. The receiving medium can be, for example, a fabrication tray that may include a horizontal surface to carry the material dispensed from the printing head. The printing head may be, for example, an ink jet head having a plurality of dispensing nozzles arranged in an array of one or more rows along the longitudinal axis of the printing head. The printing head may be located such that its longitudinal axis is substantially parallel to the indexing direction. he printing system may further include a controller, such as a microprocessor to control the printing process, including the movement of the printing head according to a pre-defined scanning plan (e.g., a CAD configuration converted to a Stereo Lithography (STL) format and programmed into the controller). The printing head may include a plurality of jetting nozzles. The jetting nozzles dispense material onto the receiving medium to create the layers representing cross sections of a 3D object.

In addition to the printing head, there may be a source of curing energy, for curing the dispensed building material. The curing energy is typically radiation, for example, UV radiation.

Additionally, the printing system may include a leveling device for leveling and/or establishing the height of each layer after deposition and at least partial solidification, prior to the deposition of a subsequent layer.

The building materials may include modeling materials and support materials, which form the object and the temporary support constructions supporting the object as it is being built, respectively.

The modeling material (which may include one or more material(s)) is deposited to produce the desired object/s and the support material (which may include one or more material(s)) is used, with or without modeling material elements, to provide support structures for specific areas of the object during building and assure adequate vertical placement of subsequent object layers, e.g., in cases where objects include overhanging features or shapes such as curved geometries, negative angles, voids, and so on.

Both the modeling and support materials are preferably liquid at the working temperature at which they are dispensed, and subsequently hardened, typically upon exposure to curing energy (e.g., UV curing), to form the required layer shape. After printing completion, support structures are removed to reveal the final shape of the fabricated 3D object.

Several additive manufacturing processes allow additive formation of objects using more than one modeling material. For example, U.S. Patent Application having Publication No. 2010/0191360, by the present Assignee, discloses a system which comprises a solid freeform fabrication apparatus having a plurality of dispensing heads, a building material supply apparatus configured to supply a plurality of building materials to the fabrication apparatus, and a control unit configured for controlling the fabrication and supply apparatus. The system has several operation modes. In one mode, all dispensing heads operate during a single building scan cycle of the fabrication apparatus. In another mode, one or more of the dispensing heads is not operative during a single building scan cycle or part thereof.

In a 3D inkjet printing process such as Polyjet™ (Stratasys Ltd., Israel), the building material is selectively jetted from one or more printing heads and deposited onto a fabrication tray in consecutive layers according to a pre-determined configuration as defined by a software file.

U.S. Patent No. 9,227,365, by the present assignee, discloses methods and systems for solid freeform fabrication of shelled objects, constructed from a plurality of layers and a layered core constituting core regions and a layered shell constituting envelope regions.

Additive Manufacturing processes have been used to form rubber-like materials. For example, rubber-like materials are used in PolyJet™ systems as described herein. These materials are formulated to have relatively low viscosity permitting dispensing, for example by inkjet, and to develop Tg which is lower than room temperature, *e.g.*, -10 °C or lower than room temperature. The latter is obtained by formulating a product with relatively low degree of cross-linking and by

using monomers and oligomers with intrinsic flexible molecular structure (e.g., acrylic elastomers).

An exemplary family of Rubber-like materials usable in PolyJet™ systems (marketed under the trade name "Tango" family) offers a variety of elastomer characteristics, including Shore scale A hardness, elongation at break, Tear Resistance and tensile strength.

Another exemplary family of rubber-like materials usable in PolyJet™ systems (marketed under the trade name "Agilus" family) is disclosed in WO 2017/208238, includes, in addition to curable materials, silica nanoparticles, and provides for improved properties of the obtained materials, particularly improved elongation at break, Tear Resistance and tensile strength.

Rubber-like materials are useful for many modeling applications including: Exhibition and communication models; Rubber surrounds and over-molding; Soft-touch coatings and nonslip surfaces for tooling or prototypes; and Knobs, grips, pulls, handles, gaskets, seals, hoses, footwear.

Additional background art includes WO 2009/013751; WO 2016/009426; WO 2016/063282; WO 2016/125170; WO 2017/134672; WO 2017/134673; WO 2017/134674; WO 2017/134676; WO 2017/068590; WO 2017/187434; WO 2018/055521; and WO 2018/055522, all by the present assignee.

## SUMMARY OF THE INVENTION

According to an aspect of some embodiments of the present invention there is provided a curable formulation that provides, when hardened, an elastomeric material, the formulation comprising:

a curable, mono-functional, elastomeric material in a total amount of from 50 to 70 % by weight of the total weight of the formulation;

a curable, multi-functional, elastomeric material in a total amount of from 20 to 40 % by weight of the total weight of the formulation;

a curable, multi-functional, non-elastomeric material in a total amount of no more than 5 % by weight of the total weight of the formulation; and

a curable material that comprises at least two hydrogen bond-forming groups, in a total amount of from about 1 to about 20, or from about 1 to about 10 % by weight of the total weight of the formulation.

According to some of any of the embodiments described herein, each of the curable materials is a UV-curable material.

According to some of any of the embodiments described herein, each of the curable materials is a (meth)acrylic material.

According to some of any of the embodiments described herein, the hydrogen bond-forming group comprises at least one hydrogen bond donor group and at least one hydrogen bond acceptor group.

According to some of any of the embodiments described herein, the at least two hydrogen bond-forming groups are separated from one another by no more than 2 atoms.

According to some of any of the embodiments described herein, a ratio between a number of the hydrogen bond forming groups and molecular weight of the material containing same is higher than 0.01.

According to some of any of the embodiments described herein, the curable material that comprises at least two hydrogen bond-forming groups is a (meth)acrylamide, preferably a methacrylamide.

According to some of any of the embodiments described herein, a concentration of the curable material that comprises at least two hydrogen bond-forming groups ranges from 1 to 10 %, or from 1 to 5 %, or from 1 to 3 %, or from 1.5 to 2 %, by weight, of the total weight of the formulation.

According to some of any of the embodiments described herein, at least one of the curable elastomeric materials is capable of forming hydrogen bonds.

According to some of any of the embodiments described herein, at least 50 %, or at least 60 %, or at least 70 %, or at least 80 %, of the curable materials comprise a curable material (e.g., one or more curable material(s)) that is capable of forming hydrogen bonds.

According to some of any of the embodiments described herein, the curable material capable of forming hydrogen bonds comprises at least one carbamate group.

According to some of any of the embodiments described herein, the curable material capable of forming hydrogen bonds is a urethane (meth)acrylate.

According to some of any of the embodiments described herein, a concentration of the curable, multi-functional elastomeric material ranges from 10 to 20, or from 10 to 15, % by weight of the total weight of the formulation.

According to some of any of the embodiments described herein, the curable, multi-functional elastomeric material comprises a multi-functional urethane acrylate.

According to some of any of the embodiments described herein, the curable, mono-functional elastomeric material comprises a mono-functional urethane acrylate.

According to some of any of the embodiments described herein, a weight ratio of the curable, mono-functional elastomeric material and the curable material that comprises at least two hydrogen bond-forming groups ranges from 20:1 to 60:1, or from 30:1 to 50:1.

According to some of any of the embodiments described herein, the curable formulation further comprises a mono-functional non-elastomeric curable material.

According to some of any of the embodiments described herein, a concentration of the additional mono-functional non-elastomeric curable material ranges from 15 to 25, % by weight of the total weight of the formulation.

According to some of any of the embodiments described herein, the multi-functional non-elastomeric curable material comprises a tertiary amine group.

According to some of any of the embodiments described herein, the multi-functional non-elastomeric curable material comprises a material that features a functionality, as defined herein, which is higher than 2.

According to some of any of the embodiments described herein, a concentration of the multi-functional non-elastomeric curable material ranges from 0.1 to 2, or from 0.1 to 1, % by weight, of the total weight of the formulation.

According to some of any of the embodiments described herein, the curable formulation further comprises at least one material selected from a surfactant, a dispersant, a plasticizer, a filler, a dye, a pigment, an inhibitor and an anti-oxidant.

According to some of any of the embodiments described herein, the curable formulation is characterized, when hardened, by Tear Resistance of at least 4 or at least 4.5 Kg/cm.

According to some of any of the embodiments described herein, the curable formulation is characterized, when hardened, by Tensile Strength of at least 2, or at least 2.5, MPa.

According to some of any of the embodiments described herein, the curable formulation is characterized, when hardened, by elongation at break of at least 300, or at least 350, %.

According to some of any of the embodiments described herein, the curable formulation is characterized, when hardened, by Shore A hardness of at least 30, or at least 40.

According to some of any of the embodiments described herein, the curable formulation is characterized, when hardened, by an average Tg of no more than 15 °C.

According to some of any of the embodiments described herein, the curable formulation is usable as a modeling material formulation in additive manufacturing of a three-dimensional object that comprises, in at least a portion thereof, an elastomeric material.

According to an aspect of some embodiments of the present invention there is provided a method of additive manufacturing a three-dimensional object comprising, in at least a portion thereof, an elastomeric material, the method comprising sequentially forming a plurality of layers in a configured pattern corresponding to the shape of the object, thereby forming the object,

wherein the formation of each of at least a few of the layers comprises dispensing a modeling material formulation which is a curable elastomeric formulation as described herein in any of the respective embodiments and any combination thereof, and exposing the dispensed modeling material to a curing condition (e.g., curing energy) to thereby form a cured modeling material,

thereby manufacturing the three-dimensional object.

According to some of any of the embodiments described herein, the curing condition comprises curing energy.

According to some of any of the embodiments described herein, the curing condition (e.g., curing energy) comprises UV irradiation.

According to some of any of the embodiments described herein, the UV irradiation is from a LED energy source.

According to some of any of the embodiments described herein, the dispensing is at a temperature of no more than 40, or no more than 35 °C.

According to an aspect of some embodiments of the present invention there is provided a three-dimensional object manufactured by the additive manufacturing method as described herein in any of the respective embodiments.

Unless otherwise defined, all technical and/or scientific terms used herein have the same meaning as commonly understood by one of ordinary skill in the art to which the invention pertains. Although methods and materials similar or equivalent to those described herein can be used in the practice or testing of embodiments of the invention, exemplary methods and/or materials are described below. In case of conflict, the patent specification, including definitions, will control. In addition, the materials, methods, and examples are illustrative only and are not intended to be necessarily limiting.

Implementation of the method and/or system of embodiments of the invention can involve performing or completing selected tasks manually, automatically, or a combination thereof. Moreover, according to actual instrumentation and equipment of embodiments of the method and/or system of the invention, several selected tasks could be implemented by hardware, by software or by firmware or by a combination thereof using an operating system.

For example, hardware for performing selected tasks according to embodiments of the invention could be implemented as a chip or a circuit. As software, selected tasks according to embodiments of the invention could be implemented as a plurality of software instructions being executed by a computer using any suitable operating system. In an exemplary embodiment of the invention, one or more tasks according to exemplary embodiments of method and/or system as

described herein are performed by a data processor, such as a computing platform for executing a plurality of instructions. Optionally, the data processor includes a volatile memory for storing instructions and/or data and/or a non-volatile storage, for example, a magnetic hard-disk and/or removable media, for storing instructions and/or data. Optionally, a network connection is provided as well. A display and/or a user input device such as a keyboard or mouse are optionally provided as well.

## BRIEF DESCRIPTION OF THE SEVERAL VIEWS OF THE DRAWING(S)

Some embodiments of the invention are herein described, by way of example only, with reference to the accompanying drawings. With specific reference now to the drawings in detail, it is stressed that the particulars shown are by way of example and for purposes of illustrative discussion of embodiments of the invention. In this regard, the description taken with the drawings makes apparent to those skilled in the art how embodiments of the invention may be practiced.

In the drawings:

FIGs. 1A-D are schematic illustrations of an additive manufacturing system according to some embodiments of the invention.

FIGs. 2A-2C are schematic illustrations of printing heads according to some embodiments of the present invention.

FIGs. 3A and 3B are schematic illustrations demonstrating coordinate transformations according to some embodiments of the present invention.

FIG. 4 is a schematic illustration of a region which includes interlaced modeling materials.

FIGs. 5A-D are schematic illustrations of a representative and non-limiting example of a structure according to some embodiments of the present invention.

FIG. 6 is a schematic illustration of an exemplary cross-linking via hydrogen bonds, effected by a methacrylamide.

FIGs. 7A-B are photographs showing geometrical deformation (FIG. 7A) and curling (FIG. 7B) of objects made of an exemplary elastomeric modeling material formulation according to some of the present embodiments (right objects) compared with objects made of commercially available elastomeric modeling material formulation that comprises silica particles (left objects).

## DESCRIPTION OF SPECIFIC EMBODIMENTS OF THE INVENTION

The present invention, in some embodiments thereof, relates to additive manufacturing (AM), and, more particularly, but not exclusively, to formulations and methods usable in additive manufacturing of an object made, in at least a portion thereof, of rubber-like material(s).

Before explaining at least one embodiment of the invention in detail, it is to be understood that the invention is not necessarily limited in its application to the details of construction and the arrangement of the components and/or methods set forth in the following description and/or illustrated in the drawings and/or the Examples. The invention is capable of other embodiments or of being practiced or carried out in various ways.

In conventional production of elastomeric materials (elastomers, rubber-like materials), the starting material is typically a thermoplastic polymer with low Tg, which is compounded and cured or vulcanized to achieve the desired final properties. In contrast, in additive manufacturing processes such as 3D (inkjet) printing, a cured polymer is produced in one stage from suitable monomers and/or low molecular weight (e.g., lower than 1,000 grams/mol or lower than 500 grams/mol) cross-linkers and oligomers. Controlling the molecular weight, cross-linking density and mechanical properties of the obtained rubber-like materials in such processes is therefore challenging. Thus, for example, PolyJet™ rubber-like materials are often characterized by low Tear Resistance (TR) value and/or slow return velocity after deformation, when compared, for example, to conventional elastomers. PolyJet™ rubber-like materials which exhibit high elongation are often characterized by low modulus, low Tear Resistance and/or low Tg and tackiness.

The present inventors have now designed and successfully practiced novel formulations that are suitable for use in additive manufacturing (e.g., feature properties that meet the AM process requirements as described herein) and that provide, when hardened, rubber-like materials. The novel formulations include a curable material that is capable of forming multiple hydrogen bonds along with elastomeric curable materials that are also capable of participating in hydrogen bonds formation. As demonstrated in the Examples section that follows, the present inventors have showed that using such formulations, rubber-like materials featuring, simultaneously, improved elongation, elastic modulus and Tear Resistance, can be obtained.

Referring now to the drawings, FIGs. 1A-1D, 2A-2C, 3A, 3B, 4 and 5A-5D present schematic illustrations of exemplary systems and structures according to some embodiments of the present invention. FIG. 6 presents a schematic illustration of the physical cross-linking effected by hydrogen bonds when an exemplary curable material, methacrylamide, is included in the formulation. FIGs. 7A-B are photographs showing the improved objects formed using an exemplary formulation according to some embodiments of the present invention, compared to objects formed using a commercially available, silica particles-containing formulation. Table 1 in the Examples section that follows further presents the improved mechanical properties of rubber-

like materials obtained in 3D inkjet printing of exemplary formulations according to the present embodiments.

Herein throughout, the phrases "rubber", "rubbery materials", "elastomeric materials" and "elastomers" are used interchangeably to describe materials featuring characteristics of elastomers. The phrase "rubbery-like material" or "rubber-like material" is used to describe materials featuring characteristics of rubbers, prepared by additive manufacturing (e.g., 3D inkjet printing) rather than conventional processes that involve vulcanization of thermoplastic polymers. These terms are used to describe the material obtained upon hardening or solidification of a formulation as described herein.

The term "rubbery-like material" is also referred to herein interchangeably as "elastomeric material".

Elastomers, or rubbers, are flexible materials that are typically characterized by low Tg (e.g., lower than room temperature, preferably lower than 10 °C, lower than 0 °C and even lower than -10 °C).

The following describes some of the properties characterizing rubbery materials, as used herein and in the art.

Shore A Hardness, which is also referred to as Shore hardness or simply as hardness, describes a material's resistance to permanent indentation, defined by type A durometer scale. Shore hardness is typically determined according to ASTM D2240.

Elastic Modulus, which is also referred to as Modulus of Elasticity or as Young's Modulus, or as Tensile modulus, or "E", describes a material's resistance to elastic deformation when a force is applied, or, in other words, as the tendency of an object to deform along an axis when opposing forces are applied along that axis. Elastic modulus is typically measured by a tensile test (e.g., according to ASTM D 624) and is determined by the linear slope of a Stress-Strain curve in the elastic deformation region, wherein Stress is the force causing the deformation divided by the area to which the force is applied and Strain is the ratio of the change in some length parameter caused by the deformation to the original value of the length parameter. The stress is proportional to the tensile force on the material and the strain is proportional to its length.

Tensile Strength describes a material's resistance to tension, or, in other words, its capacity to withstand loads tending to elongate, and is defined as the maximum stress in MPa, applied during stretching of an elastomeric composite before its rupture. Tensile strength is typically measured by a tensile test (e.g., according to ASTM D 624) and is determined as the highest point of a Stress-Strain curve, as described herein and in the art.

Elongation is the extension of a uniform section of a material, expressed as percent of the original length as follows:

$$\text{Elongation } \% = \frac{\text{Final length} - \text{Original length}}{\text{Original length}} \times 100.$$

Elongation is typically determined according to ASTM D412.

Z Tensile elongation is the elongation measured as described herein upon printing in Z direction.

Tear Resistance (TR), which is also referred to herein and in the art as "Tear Strength" describes the maximum force required to tear a material, expressed in N per mm, or as Kg per cm, whereby the force acts substantially parallel to the major axis of the sample. Tear Resistance can be measured by the ASTM D 412 method. ASTM D 624 can be used to measure the resistance to the formation of a tear (tear initiation) and the resistance to the expansion of a tear (tear propagation). Typically, a sample is held between two holders and a uniform pulling force is applied until deformation occurs. Tear Resistance is then calculated by dividing the force applied by the thickness of the material. Materials with low Tear Resistance tend to have poor resistance to abrasion.

Tear Resistance under constant elongation describes the time required for a specimen to tear when subjected to constant elongation (lower than elongation at break). This value is determined, for example, in an "O-ring" test as described, for example, in WO 2017/208238.

Embodiments of the present invention relate to formulations usable in additive manufacturing of three-dimensional (3D) objects or parts (portions) thereof made of rubbery-like materials, to additive manufacturing processes utilizing same, and to objects fabricated by these processes.

Herein throughout, the term "object" describes a final product of the additive manufacturing. This term refers to the product obtained by a method as described herein, after removal of the support material, if such has been used as part of the building material. The "object" therefore essentially consists (at least 95 weight percents) of a hardened (e.g., cured) modeling material.

The term "object" as used herein throughout refers to a whole object or a part thereof.

An object according to the present embodiments is such that at least a part or a portion thereof is made of a rubbery-like material, and is also referred to herein as "an object made of a rubbery-like material". The object may be such that several parts or portions thereof are made of a rubbery-like material, or such that is entirely made of a rubbery-like material. The rubbery-like

material can be the same or different in the different parts or portions, and, for each part, portion or the entire object made of a rubbery-like material, the rubbery-like material can be the same or different within the portion, part or object. When different rubbery-like materials are used, they can differ in their chemical composition and/or mechanical properties, as is further explained hereinafter.

Herein throughout, the phrases "building material formulation", "uncured building material", "uncured building material formulation", "building material" and other variations therefore, collectively describe the materials that are dispensed to sequentially form the layers, as described herein. This phrase encompasses uncured materials dispensed so as to form the object, namely, one or more uncured modeling material formulation(s), and uncured materials dispensed so as to form the support, namely uncured support material formulations.

Herein throughout, the phrase "cured modeling material" or "hardened modeling material" describes the part of the building material that forms the object, as defined herein, upon exposing the dispensed building material to curing, and, optionally, if a support material has been dispensed, also upon removal of the cured support material, as described herein. The cured modeling material can be a single cured material or a mixture of two or more cured materials, depending on the modeling material formulations used in the method, as described herein.

The phrase "cured modeling material" or "cured modeling material formulation" can be regarded as a cured building material wherein the building material consists only of a modeling material formulation (and not of a support material formulation). That is, this phrase refers to the portion of the building material, which is used to provide the final object.

Herein throughout, the phrase "modeling material formulation", which is also referred to herein interchangeably as "modeling formulation", "model formulation" "model material formulation" or simply as "formulation", describes a part or all of the building material which is dispensed so as to form the object, as described herein. The modeling material formulation is an uncured modeling formulation (unless specifically indicated otherwise), which, upon exposure to curing energy, forms the object or a part thereof.

In some embodiments of the present invention, a modeling material formulation is formulated for use in three-dimensional inkjet printing and is able to form a three-dimensional object on its own, *i.e.*, without having to be mixed or combined with any other substance.

An uncured building material can comprise one or more modeling formulations, and can be dispensed such that different parts of the object are made, upon curing, of different cured modeling formulations or different combinations thereof, and hence are made of different cured modeling materials or different mixtures of cured modeling materials.

The formulations forming the building material (modeling material formulations and support material formulations) comprise one or more curable materials, which, when exposed to curing energy, form hardened (cured) material.

The formulations forming the building material (modeling material formulations and support material formulations) are also referred to herein as curable formulations (e.g., a curable modeling material formulation or a curable support material formulation).

Herein throughout, a "curable material" is a compound (typically a monomeric or oligomeric compound, yet optionally a polymeric material) which, when exposed to a curing condition (e.g., curing energy), as described herein, solidifies or hardens to form a cured material. Curable materials are typically polymerizable materials, which undergo polymerization and/or cross-linking when exposed to a suitable energy source.

A curable material, according to the present embodiments, also encompasses materials which harden or solidify (cure) without being exposed to a curing energy, but rather to another curing condition (for example, upon exposure to a chemical reagent or simply upon exposure to the environment).

The terms "curable" and "solidifiable" as used herein are interchangeable.

The polymerization can be, for example, free-radical polymerization, cationic polymerization or anionic polymerization, and each can be induced when exposed to curing energy such as, for example, radiation, heat, etc., as described herein.

In some of any of the embodiments described herein, a curable material is a photopolymerizable material, which polymerizes and/or undergoes cross-linking upon exposure to radiation, as described herein, and in some embodiments the curable material is a UV-curable material, which polymerizes and/or undergoes cross-linking upon exposure to UV radiation, as described herein.

In some embodiments, a curable material as described herein is a photopolymerizable material that polymerizes via photo-induced free-radical polymerization. Alternatively, the curable material is a photopolymerizable material that polymerizes via photo-induced cationic polymerization.

In some of any of the embodiments described herein, a curable material can be a monomer, an oligomer or a short-chain polymer, each being polymerizable and/or cross-linkable as described herein.

In some of any of the embodiments described herein, when a curable material is exposed to curing energy (e.g., radiation), it hardens (cured) by any one, or combination, of chain elongation and cross-linking.

In some of any of the embodiments described herein, a curable material is a monomer or a mixture of monomers which can form a polymeric material upon a polymerization reaction, when exposed to curing energy at which the polymerization reaction occurs. Such curable materials are also referred to herein as monomeric curable materials.

In some of any of the embodiments described herein, a curable material is an oligomer or a mixture of oligomers which can form a polymeric material upon a polymerization reaction, when exposed to curing energy at which the polymerization reaction occurs. Such curable materials are also referred to herein as oligomeric curable materials.

In some of any of the embodiments described herein, a curable material, whether monomeric or oligomeric, can be a mono-functional curable material or a multi-functional curable material.

Herein, a mono-functional curable material comprises one functional group that can undergo polymerization when exposed to curing energy (e.g., radiation).

A multi-functional curable material comprises two or more, e.g., 2, 3, 4 or more, functional groups that can undergo polymerization when exposed to curing energy. Multi-functional curable materials can be, for example, di-functional, tri-functional or tetra-functional curable materials, which comprise 2, 3 or 4 groups that can undergo polymerization, respectively (also referred to herein as featuring a functionality of 2, 3, or 4, etc.). The two or more functional groups in a multi-functional curable material are typically linked to one another by a linking moiety, as defined herein. When the linking moiety is an oligomeric or polymeric moiety, the multi-functional group is an oligomeric or polymeric multi-functional curable material. Multi-functional curable materials can undergo polymerization when subjected to curing energy and/or act as cross-linkers.

The method of the present embodiments manufactures three-dimensional objects in a layer-wise manner by forming a plurality of layers in a configured pattern corresponding to the shape of the objects, as described herein.

The final three-dimensional object is made of the modeling material or a combination of modeling materials or a combination of modeling material/s and support material/s or modification thereof (*e.g.*, following curing). All these operations are well-known to those skilled in the art of solid freeform fabrication.

According to an aspect of some embodiments of the present invention there is provided a method of additive manufacturing of a three-dimensional object made of an elastomeric (rubbery-like) material, as described herein.

The method is generally effected or performed by sequentially forming a plurality of layers in a configured pattern corresponding to the shape of the object, such that formation of each of at

least a few of said layers, or of each of said layers, comprises dispensing a building material (uncured) which comprises one or more modeling material formulation(s), and exposing the dispensed modeling material to curing energy to thereby form a cured modeling material, as described in further detail hereinafter.

In some exemplary embodiments of the invention an object is manufactured by dispensing a building material (uncured) that comprises two or more different modeling material formulations, each modeling material formulation from a different nozzle array of the inkjet printing apparatus. The modeling material formulations are optionally and preferably deposited in layers during the same pass of the printing heads. The modeling material formulations and/or combination of formulations within the layer are selected according to the desired properties of the object, and as further described in detail hereinbelow.

The phrase "digital materials", as used herein and in the art, describes a combination of two or more materials on a microscopic scale or voxel level such that the printed zones of a specific material are at the level of few voxels, or at a level of a voxel block. Such digital materials may exhibit new properties that are affected by the selection of types of materials and/or the ratio and relative spatial distribution of two or more materials.

In exemplary digital materials, the modeling material of each voxel or voxel block, obtained upon curing, is independent of the modeling material of a neighboring voxel or voxel block, obtained upon curing, such that each voxel or voxel block may result in a different model material and the new properties of the whole part are a result of a spatial combination, on the voxel level, of several different model materials.

Herein throughout, whenever the expression "at the voxel level" is used in the context of a different material and/or properties, it is meant to include differences between voxel blocks, as well as differences between voxels or groups of few voxels. In preferred embodiments, the properties of the whole part are a result of a spatial combination, on the voxel block level, of several different model materials.

***The curable elastomeric Formulation:***

According to an aspect of some embodiments of the present invention there is provided a curable formulation, as defined herein, which provides, when hardened (e.g., upon exposure to a curing condition such as a curing energy as defined herein), an elastomeric material, as defined herein. Such a formulation is also referred to herein as a curable elastomeric formulation. According to some embodiments of the present invention, the curable elastomeric formulation is usable as a modeling material formulation for additive manufacturing of a three-dimensional object

that comprises in at least a portion thereof an elastomeric material (a rubber-like material), as defined herein.

According to some embodiments of the present invention the curable elastomeric formulation is characterized as featuring, when hardened, one or more of the following characteristics:

Tear Resistance of at least 4 or at least 4.5 Kg/cm, for example, from 4 to 8, or from 4 to 7.5, or from 4.5 to 8, or from 4.5 to 7.5, Kg/cm, including any intermediate values and subranges therebetween;

Tensile Strength of at least 2, or at least 2.5, MPa, for example, from 2 to 6, or from 2 to 5, or from 2 to 3, or from 2 to 4, or from 3 to 5, MPa, including any intermediate values and subranges therebetween;

Elongation at break of at least 300, or at least 350, %, for example, from 300 to 500, or from 300 to 450, or from 300 to 400, or from 350 to 500, or from 350 to 450, or from 350 to 400, %, including any intermediate values and subranges therebetween;

Shore A hardness of at least 30, or at least 40, for example, from 30 to 50, or from 30 to 40, or from 35 to 50, or from 40 to 50, or from 35 to 45, including any intermediate values and subranges therebetween;

Tg (e.g., average Tg) of no more than 15, or no more than 10, or no more than 5, or no more than 0 °C, or Tg that is lower by at least 10, or at least 15, or at least 20 °C, of a temperature of an AM system to be practiced, as described herein.

According to some of any of the embodiments described herein, the curable elastomeric formulation features one, two, three, four or all of the above characteristics.

According to some embodiments of the present invention the curable elastomeric formulation is characterized as featuring, when hardened:

Tear Resistance of at least 4 or at least 4.5 Kg/cm, for example, from 4 to 8, or from 4 to 7.5, or from 4.5 to 8, or from 4.5 to 7.5, Kg/cm, including any intermediate values and subranges therebetween; and

Elongation at break of at least 300, or at least 350, or even at least 400, %, for example, from 300 to 500, or from 300 to 450, or from 300 to 400, or from 350 to 500, or from 350 to 450, or from 350 to 400, %, including any intermediate values and subranges therebetween;

According to some of any of the embodiments described herein, the elastomeric curable formulations of the present embodiments are further characterized by good printability and stability, as described in the Examples section that follows, and as providing, when used in additive manufacturing, objects that feature minimal deformation, curling and/or volume shrinkage.

According to some of any of the embodiments described herein, the curable formulation features one or more of the above characteristics when hardened upon exposure to irradiation as the curing condition (electromagnetic curing energy), in some embodiments, upon exposure to irradiation at the UV-vis range, and in some of these embodiments, upon exposure to UV irradiation from a LED source.

According to some of any of the embodiments described herein, the curable formulation features one or more of the above characteristics when hardened upon exposure to irradiation as the curing condition (electromagnetic curing energy), at a temperature of no more than 40 °C, or no more than 35 °C. In some of these embodiments, the irradiation is UV irradiation from a LED source.

As discussed herein, in AM systems that use a LED source for irradiation as the curing condition, the environment temperature is typically low, namely, of about 30 to 40, or 30 to 35, °C. Such a relatively low temperature results in a high temperature difference between the environment and the surface of a dispensed layer during the hardening process, which may lead to deformation of the formed object, particularly when high degree of covalent cross-linking is effected during the exposure to the irradiation.

As discussed herein, the formulations as described herein circumvent this problem by reducing the degree of covalent cross-linking and replacing at least some of the covalent cross-linking bonds by cross-linking via hydrogen bonds, thereby reducing the accumulated stress during the hardening and as a result the deformation, curling and/or shrinkage, without compromising and even improving the mechanical properties of the obtained hardened elastomeric material. The formulations as described herein can therefore be successfully practiced also when the environment temperature is relatively low as described herein (for example, when a LED source is used for irradiation). According to an aspect of some embodiments of the present invention, the curable elastomeric formulation comprises one or more elastomeric curable materials as described herein, and a curable material that, when hardened, effects cross-linking via hydrogen bonds, as described herein in any of the respective embodiments. The curable material which, when hardened, effects cross-linking via hydrogen bonds, is also referred to herein as a hydrogen bond-forming curable material or as Component E. In some of any of the embodiments described herein, such a curable material comprises at least two hydrogen bond-forming groups as described herein.

According to some embodiments, the curable elastomeric material(s) comprise one or more curable, mono-functional, elastomeric material(s) (also referred to herein as component B), one or more curable, multi-functional, elastomeric material(s) (also referred to herein as component C) or a combination thereof.

According to some embodiments, the curable elastomeric material(s) comprise one or more curable, mono-functional, elastomeric material(s) (also referred to herein as component B) and one or more curable, multi-functional, elastomeric material(s) (also referred to herein as component C).

*The hydrogen bond-forming curable material (Component E):*

As used herein and known in the art, a "hydrogen bond" is a non-covalent bond that forms a type of dipole-dipole attraction which occurs when a hydrogen atom bonded to a strongly electronegative atom exists in the vicinity of another electronegative atom with a lone pair of electrons.

The hydrogen atom in a hydrogen bond is partly shared between two relatively electronegative atoms.

According to some of any of the embodiments described herein, a curable material that effects cross-linking via hydrogen bonds comprises at least one hydrogen bond-forming group.

The phrase "hydrogen bond-forming group", as used herein, describes a moiety, or group, or atom, which is capable of forming hydrogen bonds by being a hydrogen bond donor and/or a hydrogen bond acceptor. Certain groups can include both a hydrogen bond donor and a hydrogen bond acceptor and as such can effect or establish cross-linking.

A hydrogen-bond donor, which is also referred to herein as a hydrogen bond-forming donor group, is the group that includes both the atom to which the hydrogen is more tightly linked and the hydrogen atom itself, whereas a hydrogen-bond acceptor, which is also referred to herein as a hydrogen bond-forming acceptor group, is an electronegative atom capable of being linked to a hydrogen atom of another group. The relatively electronegative atom to which the hydrogen atom is covalently bonded pulls electron density away from the hydrogen atom so that it develops a partial positive charge ($\delta^+$). Thus, it can interact with an atom having a partial negative charge ($\delta^-$) through an electrostatic interaction.

Atoms that typically participate in hydrogen bond interactions, both as donors and acceptors, include oxygen, nitrogen and fluorine. These atoms typically form a part of chemical group or moiety such as, for example, carbonyl, carboxylate, amide, hydroxyl, amine, imine, carbamate, alkylfluoride, $F_2$, and more. However, other electronegative atoms and chemical groups or moieties containing same may participate in hydrogen bonding.

Exemplary hydrogen bond-forming groups include, but are not limited to, amide, carboxylate, hydroxy, alkoxy, aryloxy, ether, amine, carbamate, hydrazine, a nitrogen-containing heteralicyclic (e.g., piperidine, oxalidine), nitrile, and an oxygen-containing heteralicyclic (e.g., tetrahydrofuran, morpholine), and any other chemical moiety that comprises one or more nitrogen and/or oxygen atoms.

According to some of any of the embodiments described herein, a preferred material is such that is capable of forming at least two hydrogen bonds, for example, by featuring one or more hydrogen bond forming groups that comprise two of a hydrogen donor group and/or a hydrogen acceptor group.

In some embodiments, the hydrogen bond-forming curable material comprises one or more hydrogen bond-forming groups selected from an amide group, and a carbamate group, each of which features a hydrogen donor group (-NH-) and a hydrogen acceptor group or atom (=O).

According to some of any of the embodiments described herein, a preferred material is such that features at least one hydrogen bond-forming donor group which is an amine group (e.g., an amine that forms a part of an amide or a carbamate).

According to some of any of the embodiments described herein, a preferred material is such that features at least one hydrogen bond-forming donor group and at least one hydrogen bond-forming acceptor group. Preferably, each of the donor group(s) and the acceptor group(s) are separated from one another by no more than 2 atoms, or no more than 1 atom. An exemplary such hydrogen-bond forming group is an amide that is either unsubstituted or which is substituted by a group that does not contain a hydrogen bond-forming group.

In some embodiments, the hydrogen bond-forming curable material is such that a ratio between the number of hydrogen bond-forming groups and its molecular weight is higher than 0.02, and is, for example, 0.025, 0.030, 0.035, etc., for example, from 0.02 to 0.05, or from 0.03 to 0.05, or from 0.04 to 0.05, of from 0.03 to 0.04.

In some of any of the embodiments described herein, the hydrogen bond-forming curable material comprises one or more amide groups, and in some embodiments, it is a (meth)acrylamide (encompassing acrylamide and methacrylamide), preferably a methacrylamide. A methacrylamide is preferred for being less reactive (its rate of polymerization is lower compared to acrylamide).

The (meth)acrylamide is preferably unsubstituted. When substituted, the substituent is preferably incapable of forming hydrogen bonds, that is, does not contain a hydrogen bond-forming group as defined herein.

According to some of any of the embodiments described herein, a concentration of the curable material that effects cross-linking via hydrogen bonds (Component E) ranges from 1 to 20 %, preferably from 1 to 10 %, or from 1 to 5 %, or from 1 to 3 %, or from 1 to 2 %, or from 1.5 to 2 %, by weight, of the total weight of the formulation, including any intermediate values and subranges therebetween.

According to some embodiments, a material that is a (meth)acrylamide that is unsubstituted or is substituted by a substituent that is incapable of forming hydrogen bonds, that is, does not

contain a hydrogen bond-forming group, is in an amount of from 1 to 5 %, or from 1 to 3 %, or from 1 to 2 %, or from 1.5 to 2 %, of the total weight of the formulation.

According to some embodiments, a material that is a (meth)acrylamide that is substituted by a substituent that is capable of forming hydrogen bonds, that is, it contains a hydrogen bond-forming group, is in an amount of from 5 to 20 %, or from 10 to 20 %, of the total weight of the formulation.

*Elastomeric curable materials (Components B and C):*

One or more of the modeling material formulations usable in the method as described herein comprises an elastomeric curable material.

The phrase "elastomeric curable material" describes a curable material, as defined herein, which, upon exposure to curing energy, provides a cured material featuring properties of an elastomer (a rubber, or rubber-like material), as described herein and/or as known in the art.

Elastomeric curable materials typically comprise one or more polymerizable (curable) groups, which undergo polymerization upon exposure to a suitable curing energy, linked to a moiety that confers elasticity to the polymerized and/or cross-linked material. Such moieties typically comprise alkyl, alkylene chains, hydrocarbon, alkylene glycol groups or chains (e.g., oligo or poly(alkylene glycol) as defined herein, urethane, oligourethane or polyurethane moieties, as defined herein, and the like, including any combination of the foregoing, and are also referred to herein as "elastomeric moieties".

An elastomeric curable material is typically such that provides, when hardened, Tg lower than 5, or lower than 0, or lower than -5 °C, for example, of from -50 to 10, or from -50 to 0, or from -50 to -5 °C, including any intermediate values and subranges therebetween.

An elastomeric mono-functional curable material according to some embodiments of the present invention can be a vinyl-containing compound represented by Formula I:

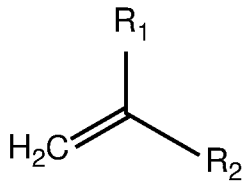


Formula I

wherein at least one of $R_1$ and $R_2$ is and/or comprises an elastomeric moiety, as described herein.

The (=$CH_2$) group in Formula I represents a polymerizable group, and is, according to some embodiments, a UV-curable group, such that the elastomeric curable material is a UV-curable material.

For example, $R_1$ is or comprises an elastomeric moiety as defined herein and $R_2$ is, for example, hydrogen, C(1-4) alkyl, C(1-4) alkoxy, or any other substituent, as long as it does not interfere with the elastomeric properties of the cured material.

In some embodiments, $R_1$ is a carboxylate, and the compound is a mono-functional acrylate monomer. In some of these embodiments, $R_2$ is methyl, and the compound is mono-functional methacrylate monomer. Curable materials in which $R_1$ is carboxylate and $R_2$ is hydrogen or methyl are collectively referred to herein as "(meth)acrylates".

In some of any of these embodiments, the carboxylate group, -C(=O)-ORa, comprises Ra which is an elastomeric moiety as described herein.

In some embodiments, $R_1$ is amide, and the compound is a mono-functional acrylamide monomer. In some of these embodiments, $R_2$ is methyl, and the compound is a mono-functional methacrylamide monomer. Curable materials in which $R_1$ is amide and $R_2$ is hydrogen or methyl are collectively referred to herein as "(meth)acrylamide".

(Meth)acrylates and (meth)acrylamides are collectively referred to herein as (meth)acrylic materials.

In some embodiments, $R_1$ is a cyclic amide, and in some embodiments, it is a cyclic amide such as lactam, and the compound is a vinyl lactam. In some embodiments, $R_1$ is a cyclic carboxylate such as lactone, and the compound is a vinyl lactone.

When one or both of $R_1$ and $R_2$ comprise a polymeric or oligomeric moiety, the mono-functional curable compound of Formula I is an exemplary polymeric or oligomeric mono-functional curable material. Otherwise, it is an exemplary monomeric mono-functional curable material.

In multi-functional elastomeric materials, the two or more polymerizable groups are linked to one another via an elastomeric moiety, as described herein.

In some embodiments, a multifunctional elastomeric material can be represented by Formula I as described herein, in which $R_1$ comprises an elastomeric material that terminates by a polymerizable group, as described herein.

For example, a di-functional elastomeric curable material can be represented by Formula I*:

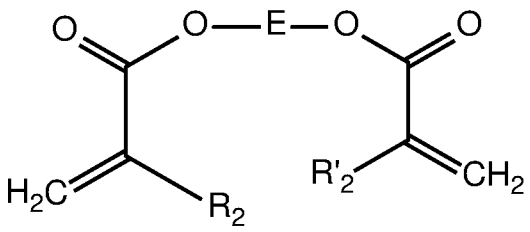

Formula I*

wherein E is an elastomeric linking moiety as described herein, and $R'_2$ is as defined herein for $R_2$.

In another example, a tri-functional elastomeric curable material can be represented by Formula II:

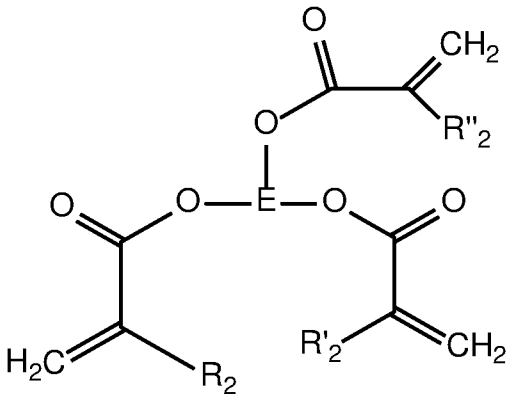

Formula II

wherein E is an elastomeric linking moiety as described herein, and $R'_2$ and $R''_2$ are each independently as defined herein for $R_2$.

In some embodiments, a multi-functional (e.g., di-functional, tri-functional or higher) elastomeric curable material can be collectively represented by Formula III:

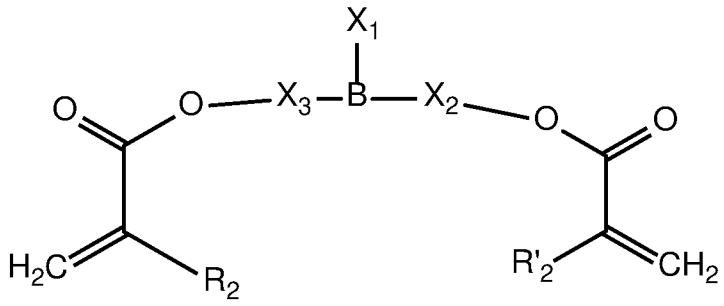

Formula III

Wherein:

$R_2$ and $R'_2$ are as defined herein;

B is a di-functional or tri-functional branching unit as defined herein (depending on the nature of $X_1$);

$X_2$ and $X_3$ are each independently absent, an elastomeric moiety as described herein, or is selected from an alkyl, a hydrocarbon, an alkylene chain, a cycloalkyl, an aryl, an alkylene glycol, a urethane moiety, and any combination thereof; and

$X_1$ is absent or is selected from an alkyl, a hydrocarbon, an alkylene chain, a cycloalkyl, an aryl, an alkylene glycol, a urethane moiety, and an elastomeric moiety, each being optionally being substituted (e.g., terminated) by a meth(acrylate) moiety (O-C(=O) $CR''_2$=$CH_2$), and any combination thereof, or, alternatively, $X_1$ is:

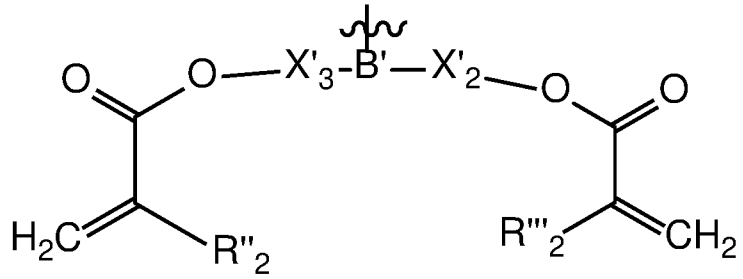

wherein:

the curved line represents the attachment point;

B' is a branching unit, being the same as, or different from, B;

$X'_2$ and $X'_3$ are each independently as defined herein for $X_2$ and $X_3$; and

$R''_2$ and $R'''_2$ are as defined herein for $R_2$ and $R'_2$.

provided that at least one of $X_1$, $X_2$ and $X_3$ is or comprises an elastomeric moiety as described herein.

The term "branching unit" as used herein describes a multi-radical, preferably aliphatic or alicyclic group. By "multi-radical" it is meant that the linking moiety has two or more attachment points such that it links between two or more atoms and/or groups or moieties.

That is, the branching unit is a chemical moiety that, when attached to a single position, group or atom of a substance, creates two or more functional groups that are linked to this single position, group or atom, and thus "branches" a single functionality into two or more functionalities.

In some embodiments, the branching unit is derived from a chemical moiety that has two, three or more functional groups. In some embodiments, the branching unit is a branched alkyl or a branched linking moiety as described herein.

Multi-functional elastomeric curable materials featuring 4 or more polymerizable groups are also contemplated and can feature structures similar to those presented in Formula III, while including, for example, a branching unit B with higher branching, or including an $X_1$ moiety featuring two (meth)acrylate moieties as defined herein, or similar to those presented in Formula II, while including, for example, another (meth)acrylate moiety that is attached to the elastomeric moiety.

In some embodiments, the elastomeric moiety, e.g., Ra in Formula I or the moiety denoted as E in Formulae I*, II and III, is or comprises an alkyl, which can be linear or branched, and which is preferably of 3 or more or of 4 or more carbon atoms; an alkylene chain, preferably of 3 or more or of 4 or more carbon atoms in length; an alkylene glycol as defined herein, an oligo(alkylene glycol), or a poly(alkylene glycol), as defined herein, preferably of 4 or more atoms in length, a urethane, an oligourethane, or a polyurethane, as defined herein, preferably of 4 or more carbon atoms in length, and any combination of the foregoing.

In some of any of the embodiments described herein, the elastomeric curable material is a (meth)acrylic curable material, as described herein, and in some embodiments, it is an acrylate or a methacrylate.

In some of any of the embodiments described herein, the elastomeric curable material is or comprises a mono-functional elastomeric curable material, and in some embodiments, the mono-functional elastomeric curable material is represented by Formula I, wherein $R_1$ is -C(=O)-ORa and Ra is or comprises a urethane, oligourethane or polyurethane.

In some embodiments, the elastomeric curable material is or comprises a multi-functional elastomeric curable material, and is some embodiments, the multi-functional elastomeric curable material is represented by Formula I*, wherein E is or comprises a urethane, an oligourethane or a polyurethane.

In some of any of the embodiments described herein, the elastomeric curable material is an elastomeric acrylate or methacrylate (also referred to as acrylic or methacrylic elastomer), for example, of Formula I, I*, II or III, and in some embodiments, the acrylate or methacrylate is selected such that when hardened, the polymeric material features a Tg lower than 0 °C or lower than -10 °C.

Exemplary elastomeric acrylate and methacrylate curable materials include, but are not limited to, 2-propenoic acid, 2-[[(butylamino)carbonyl]oxy]ethyl ester (an exemplary urethane acrylate), and compounds marketed under the trade names SR335 (Lauryl acrylate) and SR395 (isodecyl acrylate) (by Sartomer). Other examples include compounds marketed under the trade names SR350D (a trifunctional trimethylolpropane trimethacrylate (TMPTMA), SR256 (2-(2-ethoxyethoxy)ethyl acrylate, SR252 (polyethylene glycol (600) dimethacrylate), SR561 (an alkoxylated hexane diol diacrylate) (by Sartomer).

It is to be noted that other acrylic materials, featuring, for example, one or more acrylamide groups instead of one or more acrylate or methacrylate groups such as shown in Formula I, I*, II or III, are also contemplated.

According to some of any of the embodiments described herein, at least one of the curable elastomeric materials is capable of forming hydrogen bonds, that is, it features one or more, preferably, multiple, hydrogen bond-forming groups as defined and described herein. According to exemplary embodiments, a curable elastomeric material that is capable of forming hydrogen bonds comprises at least one, for example, from 1 to 20, carbamate groups. Exemplary such materials are those that comprise a urethane, an oligourethane or a polyurethane such as, for example, urethane (meth)acrylate.

According to some of any of the embodiments described herein, at least 50 %, or at least 60 %, or at least 70 %, or at least 80 %, of the elastomeric curable materials comprise a curable material that is capable of forming hydrogen bonds, as described herein.

According to some of any of the embodiments described herein, the curable, multi-functional elastomeric material comprises a multi-functional urethane acrylate (as Component C).

According to some of any of the embodiments described herein, the curable, mono-functional elastomeric material comprises a mono-functional urethane acrylate (as Component B).

In some of any of the embodiment described herein, the elastomeric curable material comprises one or more mono-functional elastomeric curable material(s) (e.g., a mono-functional elastomeric acrylate, as represented, for example, in Formula I) and one or more multi-functional (e.g., di-functional) elastomeric curable materials(s) (e.g., a di-functional elastomeric acrylate, as

represented, for example, in Formula I*, II or III) and in any of the respective embodiments as described herein.

In some of any of the embodiment described herein, the elastomeric curable material(s) comprise one or more mono-functional urethane (meth)acrylate and one or more multi-functional (e.g., di-functional) urethane (meth)acrylate.

In some of any of the embodiments described herein the one or more mono-functional urethane (meth)acrylate(s) comprise aliphatic mono-functional urethane (meth)acrylate(s).

In some of any of the embodiments described herein the one or more multi-functional urethane (meth)acrylate(s) comprise aliphatic multi-functional urethane (meth)acrylate(s).

In some of any of the embodiments described herein the one or more multi-functional urethane (meth)acrylate(s) comprise di-functional urethane (meth)acrylate(s).

In some of any of the embodiments described herein the one or more multi-functional urethane (meth)acrylate(s) comprise aliphatic di-functional urethane (meth)acrylate(s).

In some of any of the embodiments described herein, a total amount of the elastomeric curable material(s) is at least 40 %, or at least 50 %, or at least 60 %, and can be up to 70 % or even 80 %, by weight, of the total weight of a modeling material formulation(s) comprising same.

In some of any of the embodiments described herein, a total amount of the elastomeric curable material(s) ranges from 30 to 80, or from 40 to 80, or from 50 to 80, or from 60 to 80, or from 70 to 80 %, by weight, of the total weight of a modeling material formulation(s) comprising same, including any intermediate values and subranges therebetween.

According to some of any of the embodiments described herein, a concentration of the curable multi-functional elastomeric material is no more than 20, or no more than 15 % by weight of the total weight of the formulation.

According to some of any of the embodiments described herein, a concentration of the curable, multi-functional elastomeric material ranges from 10 to 20, or from 10 to 15 % by weight of the total weight of the formulation, including any intermediate values and subranges therebetween.

According to some of any of the embodiments described herein, a concentration of the curable, mono-functional elastomeric material ranges from 40 to 70, or from 50 to 70, or from 55 to 65, or from 60 to 70 % by weight of the total weight of the formulation, including any intermediate values and subranges therebetween.

According to some of any of the embodiments described herein, a weight ratio of the curable, mono-functional elastomeric material and the curable, multi-functional elastomeric

material ranges from 1:1 to 1:10, or from 1:2 to 1:10, or from 1:3 to 1:7, or from 1:4 to 1:7, or from 1:4 to 1:6, including any intermediate values and subranges therebetween.

*Additional curable materials:*

According to some of any of the embodiments described herein, the curable formulation further comprises, in addition to the elastomeric curable materials (Components B and C) and the curable material that effects hydrogen bonds cross-linking (Component E), one or more additional curable materials.

The additional curable materials can be one or more mono-functional curable material(s) (also referred to herein as Component A) and/or one or more multi-functional curable material(s) (also referred to herein as Component D).

The additional curable material can be a mono-functional curable material, a multi-functional curable material, or a mixture thereof, and each material can be a monomer, an oligomer or a polymer, or a combination thereof.

Preferably, but not obligatory, one or more or each of the additional curable material(s) is/are polymerizable when exposed to the same curing energy at which the curable elastomeric material(s) are polymerizable, for example, upon exposure to irradiation (e.g., UV-vis irradiation).

In some embodiments, the additional curable material is such that when hardened, the polymerized material features Tg higher than that of an elastomeric material, for example, a Tg higher than 0 °C, or higher than 5 °C or higher than 10 °C. In some embodiments it features Tg higher than 50 °C, for example, of from 50 to 150 °C, including any intermediate values and subranges therebetween.

Herein throughout, "Tg" refers to glass transition temperature defined as the location of the local maximum of the E" curve, where E" is the loss modulus of the material as a function of the temperature.

Broadly speaking, as the temperature is raised within a range of temperatures containing the Tg temperature, the state of a material, particularly a polymeric material, gradually changes from a glassy state into a rubbery state.

Herein, "Tg range" is a temperature range at which the E" value is at least half its value (e.g., can be up to its value) at the Tg temperature as defined above.

Without wishing to be bound to any particular theory, it is assumed that the state of a polymeric material gradually changes from the glassy state into the rubbery within the Tg range as defined above. Herein, the term “Tg” refers to any temperature within the Tg range as defined herein.

In some embodiments, the additional curable material is a non-elastomeric curable material, featuring, for example, when hardened, Tg and/or Elastic Modulus that are different from those representing elastomeric materials.

According to some of any of the embodiments described herein, the curable formulation further comprises, in addition to the elastomeric curable materials and the curable material that effects hydrogen bonds cross-linking, one or more additional mono-functional (non-elastomeric) curable materials.

According to some of any of the embodiments described herein, a total concentration of the additional (non-elastomeric) mono-functional curable material ranges from 15 to 35, or from 15 to 40, or from 15 to 25, or from 20 to 25 % by weight of the total weight of the formulation.

In some embodiments, the additional curable material comprises a mono-functional acrylate or methacrylate ((meth)acrylate). Non-limiting examples include isobornyl acrylate (IBOA), isobornylmethacrylate, acryloyl morpholine (ACMO), phenoxyethyl acrylate, marketed by Sartomer Company (USA) under the trade name SR-339, urethane acrylate oligomer such as marketed under the name CN 131B, and any other acrylates and methacrylates usable in AM methodologies. In some embodiments, the curable non-elastomeric mono-functional material (Component A) is a hydrophobic curable material. In some embodiments, the curable non-elastomeric mono-functional material (Component A) is a hydrophobic curable material that features a Tg as described hereinabove.

A "hydrophobic" curable material, as described herein, refers to materials which are characterized by LogP, when measured for water and octanol, higher than 1, and preferably higher.

According to some of any of the embodiments described herein, the formulation comprises an additional multi-functional (non-elastomeric) curable material, which is also referred to herein as Component D.

According to some of these embodiments, a total concentration of the multi-functional (non-elastomeric) curable material is lower than 10 %, or lower than 8 %, or lower than 5 %, or lower than 2 %, by weight, of the total weight of the formulation, and in some embodiments it ranges from 0.1 to 1, % by weight, of the total weight of the formulation.

According to some of any of the embodiments described herein, the multi-functional (non-elastomeric) curable material comprises one or more di-functional (non-elastomeric) curable material(s), also referred to herein as Component D1, and/or one of more multi-functional (non-elastomeric) curable material(s) of a higher functionality, for example, tri-functional or tetra-functional, material(s), which are also referred to herein as Component D2.

According to some of these embodiments, a total concentration of the di-functional (non-elastomeric) curable material (Component D1) is no more than 5 %, or no more than 3 %, or no more than 2 %, by weight, of the total weight of the formulation, and can be lower and even null, and in some embodiments it ranges from 0 to 5, or from 0 to 3, or from 0 to 2 % by weight, of the total weight of the formulation. In some embodiments, the formulation is devoid of di-functional non-elastomeric curable materials.

According to some of these embodiments, a total concentration of the higher multi-functional (non-elastomeric) curable material (Component D2) ranges from 0.1 to 2, or from 0.1 to 1, by weight, of the total weight of the formulation, including any intermediate values and subranges therebetween.

According to some of these embodiments, the multi-functional (non-elastomeric) curable material Component D2 is an amine-modified (meth)acrylate, for example, an amine-modified polyether (meth)acrylate such as marketed by Sartomer under the tradename CN550. Preferably the amine is a tertiary amine. The present inventors have uncovered that including such a compound in minute amounts substantially improves the performance of the formulation in AM.

*Exemplary Formulations:*

In some of any of the embodiments described herein, each of the elastomeric curable materials in the curable formulation is a UV curable material, and in some embodiments, it is an elastomeric (meth)acrylate, for example, an elastomeric acrylate.

In some of any of the embodiments described herein, each of the additional non-elastomeric curable materials in the formulation is a UV-curable acrylate or methacrylate.

In some of any of the embodiments described herein, the curable elastomeric formulation comprises one or more mono-functional elastomeric acrylate(s) as described herein (Component B), one or more multi-functional elastomeric acrylate(s) as described herein (Component C), methacrylamide (as exemplary Component E), one or more mono-functional acrylate or methacrylate as described herein (Component A) and one or more multi-functional acrylate or methacrylate (Component D, preferably Component D2), as described herein.

In some of any of the embodiments described herein, a weight ratio of the one or more mono-functional elastomeric acrylate(s) as described herein (Component B) and the Component E ranges from 20:1 to 60:1, or from 30:1 to 50:1, including any intermediate values and subranges therebetween.

In some of any of the embodiments described herein, the curable elastomeric formulation comprises:

one or more mono-functional elastomeric acrylate(s) as described herein (Component B), preferably a mono-functional urethane acrylate, at a total concentration that ranges from about 50 to about 70, or from 55 to 65, % by weight, of the total weight of the formulation;

one or more multi-functional elastomeric acrylate(s) as described herein (Component C), preferably a multi-functional (e.g., di-functional and/or tri-functional) urethane acrylate, at a total concentration that ranges from about 10 to about 15, % by weight, of the total weight of the formulation;

methacrylamide (as exemplary Component E), at a concentration that ranges from 1 to 2, or from 1.5 to 2 % by weight of the total weight of the formulation;

one or more non-elastomeric mono-functional acrylate or methacrylate as described herein (Component A), at a concentration that ranges from about 15 to about 25 % by weight of the total weight of the formulation; and

one or more non-elastomeric multi-functional acrylate or methacrylate, as described herein (Component D), preferably one or more highly-functional (e.g., tri-functional) acrylate or methacrylate (Component D2), for example, amine-modified tri-functional acrylate or methacrylate, at a total concentration that ranges from about 0.1 to 1 % by weight of the total weight of the formulation.

According to some of any of the embodiments described herein, the curable elastomeric formulation is devoid of silica particles, or comprises silica partciles in an amount of no more than 3 %, or no more than 2 %, or no more than 1 %, of the total weight of the formulation.

*Non-curable components:*

In some of any of the embodiments described herein, the curable elastomeric formulation further comprises an initiator, for initiating polymerization of the curable materials.

When all the curable materials (elastomeric and additional) are photopolymerizable, a photoinitiator is usable in these embodiments.

Non-limiting examples of suitable photoinitiators include benzophenones (aromatic ketones) such as benzophenone, methyl benzophenone, Michler's ketone and xanthones; acylphosphine oxide type photo-initiators such as 2,4,6-trimethylbenzolydiphenyl phosphine oxide (TMPO), 2,4,6-trimethylbenzoylethoxyphenyl phosphine oxide (TEPO), and bisacylphosphine oxides (BAPO's); benzoins and bezoin alkyl ethers such as benzoin, benzoin methyl ether and benzoin isopropyl ether and the like. Examples of photoinitiators are alpha-amino ketone, bisacylphosphine oxide (BAPO's), and those marketed under the tradename Irgacure®.

A photo-initiator may be used alone or in combination with a co-initiator. Benzophenone is an example of a photoinitiator that requires a second molecule, such as an amine, to produce a

free radical. After absorbing radiation, benzophenone reacts with a ternary amine by hydrogen abstraction, to generate an alpha-amino radical which initiates polymerization of acrylates. Non-limiting example of a class of co-initiators are alkanolamines such as triethylamine, methyldiethanolamine and triethanolamine.

According to some embodiments, the photoinitiator is, for example, of the Irgacure® family.

A concentration of a photoinitiator in a formulation containing same may range from about 0.1 to about 5 % by weight, or from about 1 to about 3 %, by weight, of the total weight of the formulation, including any intermediate value and subranges therebetween.

According to some of any of the embodiments described herein, one or more of the modeling material formulation(s) further comprises one or more additional, non-curable material, for example, one or more of a colorant (a dye and/or a pigment), a dispersant, a surfactant, a stabilizer, a plasticizer, an anti-oxidant, and an inhibitor.

An inhibitor is included in the formulation for preventing or slowing down polymerization and/or curing prior to exposing to the curing condition. Commonly used inhibitors, such as radical inhibitors, are contemplated.

In any of the exemplary modeling material formulations described herein, a concentration of an inhibitor ranges from 0 to about 2 % weight, or from 0 to about 1 %, and is, for example, 0, 0.1, 0.2, 0.3, 0.4, 0.5, 0.6, 0.7, 0.8, 0.9 or about 1 %, by weight, including any intermediate value therebetween, of the total weight of the formulation or a formulation system comprising same.

Commonly used surfactants, dispersants, colorants, anti-oxidants and stabilizers are contemplated. Exemplary concentrations of each component, if present, range from about 0.01 to about 1, or from about 0.01 to about 0.5, or from about 0.01 to about 0.1, weight percents, of the total weight of the formulation containing same.

Commonly used plasticizers are contemplated, and preferred are slow-evaporating (featuring a low evaporation rate, e.g., lower than 1 or lower than 0.5, compared to n-butyl acetate as the reference material) plasticizers, such as, for example, alkylene glycols alkyl ethers (e.g., dipropylene glycol mono-n-butyl ether, dipropylene glycol mono-methyl ether, and like materials). Without being bound by any particular theory, it is assumed and has been demonstrated (data not shown) that such plasticizers advantageously affect (that is, reduce) the Shore hardness of the hardened material without adversely affecting other mechanical properties. In some embodiments, when a plasticizer is added, the Shore hardness value of the hardened material is reduced by 10 %, or by 20 %, or by 25 %, or even more, compared to the same formulation without a plasticizer.

A plasticizer as described herein, if present, is in an amount that ranges from about 0.01 to about 5, or from about 0.01 to about 2, or from about 0.01 to about 1, or from about 0.1 to about 5, or from about 0.1 to about 2, or from about 0.1 to about 1, or from about 0.5 to about 5, or from about 0.5 to about 3, or from about 0.5 to about 2, or from 0.5 to about 1.5, % by weight, of the total weight of a formulation containing same.

In any of the exemplary modeling material formulations described herein, a concentration of a surfactant ranges from 0 to about 1 % weight, and is, for example, 0, 0.01, 0.05, 0.1, 0.5 or about 1 %, by weight, including any intermediate value therebetween, of the total weight of the formulation or formulation system comprising same.

In any of the exemplary modeling material formulations described herein, a concentration of a dispersant ranges from 0 to about 2 % weight, and is, for example, 0, 0.1, 0.5, 0.7, 1, 1.2, 1.3, 1.35, 1.4, 1.5, 1.7, 1.8 or about 2 %, by weight, including any intermediate value therebetween, of the total weight of the formulation or formulation system comprising same.

***The method:***

According to an aspect of some embodiments of the present invention there is provided a method of additive manufacturing of a three-dimensional object, as described herein. The method of the present embodiments is usable for manufacturing an object having, in at least a portion thereof, an elastomeric material, as defined herein.

The method is generally effected by sequentially forming a plurality of layers in a configured pattern corresponding to the shape of the object, such that formation of each of at least a few of said layers, or of each of said layers, comprises dispensing a building material (uncured) which comprises one or more modeling material formulation(s), and exposing the dispensed modeling material to a curing condition, preferably a curing energy (e.g., irradiation) to thereby form a cured modeling material, as described in further detail hereinafter.

In some exemplary embodiments of the invention an object is manufactured by dispensing a building material (uncured) that comprises two or more different modeling material formulations, for example, as described hereinbelow. In some of these embodiments, each modeling material formulation is dispensed from a different array of nozzles belonging to the same or distinct dispensing heads of the inkjet printing apparatus, as described herein.

In some embodiments, two or more such arrays of nozzles that dispense different modeling material formulations are both located in the same printing head of the AM apparatus (i.e. multi-channels printing head). In some embodiments, arrays of nozzles that dispense different modeling material formulations are located in separate printing heads, for example, a first array of nozzles dispensing a first modeling material formulation is located in a first printing head, and a second

array of nozzles dispensing a second modeling material formulation is located in a second printing head.

In some embodiments, an array of nozzles that dispense a modeling material formulation and an array of nozzles that dispense a support material formulation are both located in the same printing head. In some embodiments, an array of nozzles that dispense a modeling material formulation and an array of nozzles that dispense a support material formulation are located in separate printing heads.

The modeling material formulations are optionally and preferably deposited in layers during the same pass of the printing heads. The modeling material formulations and/or combination of formulations within the layer are selected according to the desired properties of the object, and as further described in detail hereinbelow. Such a mode of operation is also referred to herein as "multi-material", as described herein.

In some of any of the embodiments of the present invention, once a layer is dispensed as described herein, exposure to a curing condition (e.g., curing energy) as described herein is effected. In some embodiments, the curable materials are photocurable material, preferably UV-curable materials, and the curing condition is such that a radiation source emits UV radiation.

In some of any of the embodiments described herein, the UV irradiation is from a LED source, as described herein.

In some of any of the embodiments described herein, the curing condition comprises electromagnetic irradiation and said electromagnetic irradiation is from a LED source.

In some of any of the embodiments described herein, the curing condition comprises UV irradiation.

In some of any of the embodiments described herein, a dose of the UV irradiation is higher than 0.1 J/cm$^2$ per layer, e.g., as described herein.

In some embodiments, where the building material comprises also support material formulation(s), the method proceeds to removing the hardened support material (e.g., thereby exposing the adjacent hardened modeling material). This can be performed by mechanical and/or chemical means, as would be recognized by any person skilled in the art. A portion of the support material may optionally remain upon removal, for example, within a hardened mixed layer, as described herein.

In some embodiments, removal of hardened support material reveals a hardened mixed layer, comprising a hardened mixture of support material and modeling material formulation. Such a hardened mixture at a surface of an object may optionally have a relatively non-reflective appearance, also referred to herein as "matte"; whereas surfaces lacking such a hardened mixture

(e.g., wherein support material formulation was not applied thereon) are described as "glossy" in comparison.

In some of any of the embodiments described herein, the method further comprises exposing the cured modeling material, either before or after (preferably after) removal of a support material, if such has been included in the building material, to a post-treatment condition.

In some of any of the embodiments of this aspect of the present invention, for at least a few of the dispensed layers, the dispensing is of a curable elastomeric formulation as described herein in any of the respective embodiments and any combination thereof.

In some of any of the embodiments described herein, the dispensing temperature, that is, the temperature of the environment the system where the dispensing takes place, is lower than 40 or lower than 35 °C.

***The system:***

A representative and non-limiting example of a system **110** suitable for AM of an object **112** according to some embodiments of the present invention is illustrated in FIG. 1A. System **110** comprises an additive manufacturing apparatus **114** having a dispensing unit **16** which comprises a plurality of printing heads. Each head preferably comprises one or more arrays of nozzles **122**, typically mounted on an orifice plate **121**, as illustrated in FIGs. 2A-C described below, through which a liquid building material formulation **124** is dispensed.

Preferably, but not obligatorily, apparatus **114** is a three-dimensional printing apparatus, in which case the printing heads are printing heads, and the building material formulation is dispensed via inkjet technology. This need not necessarily be the case, since, for some applications, it may not be necessary for the additive manufacturing apparatus to employ three-dimensional printing techniques. Representative examples of additive manufacturing apparatus contemplated according to various exemplary embodiments of the present invention include, without limitation, fused deposition modeling apparatus and fused material formulation deposition apparatus.

Each printing head is optionally and preferably fed via one or more building material formulation reservoirs which may optionally include a temperature control unit (*e.g.*, a temperature sensor and/or a heating device), and a material formulation level sensor. To dispense the building material formulation, a voltage signal is applied to the printing heads to selectively deposit droplets of material formulation via the printing head nozzles, for example, as in piezoelectric inkjet printing technology. Another example includes thermal inkjet printing heads. In these types of heads, there are heater elements in thermal contact with the building material formulation, for heating the building material formulation to form gas bubbles therein, upon activation of the heater elements by a voltage signal. The gas bubbles generate pressures in the building material

formulation, causing droplets of building material formulation to be ejected through the nozzles. Piezoelectric and thermal printing heads are known to those skilled in the art of solid freeform fabrication. For any types of inkjet printing heads, the dispensing rate of the head depends on the number of nozzles, the type of nozzles and the applied voltage signal rate (frequency).

Optionally, the overall number of dispensing nozzles or nozzle arrays is selected such that half of the dispensing nozzles are designated to dispense support material formulation and half of the dispensing nozzles are designated to dispense modeling material formulation, i.e. the number of nozzles jetting modeling material formulations is the same as the number of nozzles jetting support material formulation. In the representative example of FIG. 1A, four printing heads **16a**, **16b, 16c** and **16d** are illustrated. Each of heads **16a**, **16b**, **16c** and **16d** has a nozzle array. In this Example, heads **16a** and **16b** can be designated for modeling material formulation/s and heads **16c** and **16d** can be designated for support material formulation. Thus, head **16a** can dispense one modeling material formulation, head **16b** can dispense another modeling material formulation and heads **16c** and **16d** can both dispense support material formulation. In an alternative embodiment, heads **16c** and **16d**, for example, may be combined in a single head having two nozzle arrays for depositing support material formulation. In a further alternative embodiment any one or more of the printing heads may have more than one nozzle arrays for depositing more than one material formulation, e.g. two nozzle arrays for depositing two different modeling material formulations or a modeling material formulation and a support material formulation, each formulation via a different array or number of nozzles.

Yet it is to be understood that it is not intended to limit the scope of the present invention and that the number of modeling material formulation printing heads (modeling heads) and the number of support material formulation printing heads (support heads) may differ. Generally, the number of arrays of nozzles that dispense modeling material formulation, the number of arrays of nozzles that dispense support material formulation, and the number of nozzles in each respective array are selected such as to provide a predetermined ratio, $a$, between the maximal dispensing rate of the support material formulation and the maximal dispensing rate of modeling material formulation. The value of the predetermined ratio, $a$, is preferably selected to ensure that in each formed layer, the height of modeling material formulation equals the height of support material formulation. Typical values for $a$ are from about 0.6 to about 1.5.

As used herein throughout the term "about" refers to ± 10 %.

For example, for $a = 1$, the overall dispensing rate of support material formulation is generally the same as the overall dispensing rate of the modeling material formulation when all the arrays of nozzles operate.

Apparatus **114** can comprise, for example, M modeling heads each having m arrays of p nozzles, and S support heads each having s arrays of q nozzles such that M×m×p = S×s×q. Each of the M×m modeling arrays and S×s support arrays can be manufactured as a separate physical unit, which can be assembled and disassembled from the group of arrays. In this embodiment, each such array optionally and preferably comprises a temperature control unit and a material formulation level sensor of its own, and receives an individually controlled voltage for its operation.

Apparatus **114** can further comprise a solidifying device **324** which can include any device configured to emit light, heat or the like that may cause the deposited material formulation to harden. For example, solidifying device **324** can comprise one or more radiation sources, which can be, for example, an ultraviolet or visible or infrared lamp, or other sources of electromagnetic radiation, or electron beam source, depending on the modeling material formulation being used. In some embodiments of the present invention, solidifying device **324** serves for curing or solidifying the modeling material formulation.

In addition to solidifying device **324**, apparatus **114** optionally and preferably comprises an additional radiation source **328** for solvent evaporation. Radiation source **328** optionally and preferably generates infrared radiation. In various exemplary embodiments of the invention solidifying device **324** comprises a radiation source generating ultraviolet radiation, and radiation source **328** generates infrared radiation.

In some embodiments of the present invention apparatus **114** comprises cooling system **134** such as one or more fans or the like

The printing head(s) and radiation source are preferably mounted in a frame or block **128** which is preferably operative to reciprocally move over a tray **360**, which serves as the working surface. In some embodiments of the present invention the radiation sources are mounted in the block such that they follow in the wake of the printing heads to at least partially cure or solidify the material formulations just dispensed by the printing heads. Tray **360** is positioned horizontally. According to the common conventions an X-Y-Z Cartesian coordinate system is selected such that the X-Y plane is parallel to tray **360**. Tray **360** is preferably configured to move vertically (along the Z direction), typically downward. In various exemplary embodiments of the invention, apparatus **114** further comprises one or more leveling devices **132**, e.g. a roller **326**. Leveling device **326** serves to straighten, level and/or establish a thickness of the newly formed layer prior to the formation of the successive layer thereon. Leveling device **326** preferably comprises a waste collection device **136** for collecting the excess material formulation generated during leveling.

Waste collection device **136** may comprise any mechanism that delivers the material formulation to a waste tank or waste cartridge.

In use, the printing heads of unit **16** move in a scanning direction, which is referred to herein as the X direction, and selectively dispense building material formulation in a predetermined configuration in the course of their passage over tray **360**. The building material formulation typically comprises one or more types of support material formulation and one or more types of modeling material formulation. The passage of the printing heads of unit **16** is followed by the curing of the modeling material formulation(s) by radiation source **126**. In the reverse passage of the heads, back to their starting point for the layer just deposited, an additional dispensing of building material formulation may be carried out, according to predetermined configuration. In the forward and/or reverse passages of the printing heads, the layer thus formed may be straightened by leveling device **326**, which preferably follows the path of the printing heads in their forward and/or reverse movement. Once the printing heads return to their starting point along the X direction, they may move to another position along an indexing direction, referred to herein as the Y direction, and continue to build the same layer by reciprocal movement along the X direction. Alternately, the printing heads may move in the Y direction between forward and reverse movements or after more than one forward-reverse movement. The series of scans performed by the printing heads to complete a single layer is referred to herein as a single scan cycle.

Once the layer is completed, tray **360** is lowered in the Z direction to a predetermined Z level, according to the desired thickness of the layer subsequently to be printed. The procedure is repeated to form three-dimensional object **112** in a layer-wise manner.

In another embodiment, tray **360** may be displaced in the Z direction between forward and reverse passages of the printing head of unit **16**, within the layer. Such Z displacement is carried out in order to cause contact of the leveling device with the surface in one direction and prevent contact in the other direction.

System **110** optionally and preferably comprises a building material formulation supply system **330** which comprises the building material formulation containers or cartridges and supplies a plurality of building material formulations to fabrication apparatus **114**.

A control unit **152** controls fabrication apparatus **114** and optionally and preferably also supply system **330**. Control unit **152** typically includes an electronic circuit configured to perform the controlling operations. Control unit **152** preferably communicates with a data processor **154** which transmits digital data pertaining to fabrication instructions based on computer object data, *e.g.*, a CAD configuration represented on a computer readable medium in a form of a Standard Tessellation Language (STL) format or the like. Typically, control unit **152** controls the voltage

applied to each printing head or each nozzle array and the temperature of the building material formulation in the respective printing head or respective nozzle array.

Once the manufacturing data is loaded to control unit **152** it can operate without user intervention. In some embodiments, control unit **152** receives additional input from the operator, *e.g.*, using data processor **154** or using a user interface **116** communicating with unit **152**. User interface **116** can be of any type known in the art, such as, but not limited to, a keyboard, a touch screen and the like. For example, control unit **152** can receive, as additional input, one or more building material formulation types and/or attributes, such as, but not limited to, color, characteristic distortion and/or transition temperature, viscosity, electrical property, magnetic property. Other attributes and groups of attributes are also contemplated.

Another representative and non-limiting example of a system **10** suitable for AM of an object according to some embodiments of the present invention is illustrated in FIGs. 1B-D. FIGs. 1B-D illustrate a top view (FIG. 1B), a side view (FIG. 1C) and an isometric view (FIG. 1D) of system **10**.

In the present embodiments, system **10** comprises a tray **12** and a plurality of inkjet printing heads **16**, each having one or more arrays of nozzles with respective one or more pluralities of separated nozzles. The material used for the three-dimensional printing is supplied to heads **16** by a building material supply system **42**. Tray **12** can have a shape of a disk or it can be annular. Non-round shapes are also contemplated, provided they can be rotated about a vertical axis.

Tray **12** and heads **16** are optionally and preferably mounted such as to allow a relative rotary motion between tray **12** and heads **16**. This can be achieved by (i) configuring tray **12** to rotate about a vertical axis **14** relative to heads **16**, (ii) configuring heads **16** to rotate about vertical axis **14** relative to tray **12**, or (iii) configuring both tray **12** and heads **16** to rotate about vertical axis **14** but at different rotation velocities (*e.g.*, rotation at opposite direction). While some embodiments of system **10** are described below with a particular emphasis to configuration (i) wherein the tray is a rotary tray that is configured to rotate about vertical axis **14** relative to heads **16**, it is to be understood that the present application contemplates also configurations (ii) and (iii) for system **10**. Any one of the embodiments of system **10** described herein can be adjusted to be applicable to any of configurations (ii) and (iii), and one of ordinary skills in the art, provided with the details described herein, would know how to make such adjustment.

In the following description, a direction parallel to tray **12** and pointing outwardly from axis **14** is referred to as the radial direction $r$, a direction parallel to tray **12** and perpendicular to the radial direction $r$ is referred to herein as the azimuthal direction $\varphi$, and a direction perpendicular to tray **12** is referred to herein is the vertical direction $z$.

The radial direction *r* in system **10** enacts the indexing direction y in system **110**, and the azimuthal direction φ enacts the scanning direction x in system **110**. Therefore, the radial direction is interchangeably referred to herein as the indexing direction, and the azimuthal direction is interchangeably referred to herein as the scanning direction.

The term "radial position," as used herein, refers to a position on or above tray **12** at a specific distance from axis **14**. When the term is used in connection to a printing head, the term refers to a position of the head which is at specific distance from axis **14**. When the term is used in connection to a point on tray **12**, the term corresponds to any point that belongs to a locus of points that is a circle whose radius is the specific distance from axis **14** and whose center is at axis **14**.

The term "azimuthal position," as used herein, refers to a position on or above tray **12** at a specific azimuthal angle relative to a predetermined reference point. Thus, radial position refers to any point that belongs to a locus of points that is a straight line forming the specific azimuthal angle relative to the reference point.

The term "vertical position," as used herein, refers to a position over a plane that intersect the vertical axis **14** at a specific point.

Tray **12** serves as a building platform for three-dimensional printing. The working area on which one or objects are printed is typically, but not necessarily, smaller than the total area of tray **12**. In some embodiments of the present invention the working area is annular. The working area is shown at **26**. In some embodiments of the present invention tray **12** rotates continuously in the same direction throughout the formation of object, and in some embodiments of the present invention tray reverses the direction of rotation at least once (*e.g.*, in an oscillatory manner) during the formation of the object. Tray **12** is optionally and preferably removable. Removing tray **12** can be for maintenance of system **10**, or, if desired, for replacing the tray before printing a new object. In some embodiments of the present invention system **10** is provided with one or more different replacement trays (*e.g.*, a kit of replacement trays), wherein two or more trays are designated for different types of objects (*e.g.*, different weights) different operation modes (*e.g.*, different rotation speeds), *etc*. The replacement of tray **12** can be manual or automatic, as desired. When automatic replacement is employed, system **10** comprises a tray replacement device **36** configured for removing tray **12** from its position below heads **16** and replacing it by a replacement tray (not shown). In the representative illustration of FIG. 1B tray replacement device **36** is illustrated as a drive **38** with a movable arm **40** configured to pull tray **12**, but other types of tray replacement devices are also contemplated.

Exemplified embodiments for the printing head **16** are illustrated in FIGs. 2A-2C. These embodiments can be employed for any of the AM systems described above, including, without limitation, system **110** and system **10**.

FIGs. 2A-B illustrate a printing head **16** with one (FIG. 2A) and two (FIG. 2B) nozzle arrays **22**. The nozzles in the array are preferably aligned linearly, along a straight line. In embodiments in which a particular printing head has two or more linear nozzle arrays, the nozzle arrays are optionally and preferably can be parallel to each other. When a printing head has two or more arrays of nozzles (*e.g.*, FIG. 2B) all arrays of the head can be fed with the same building material formulation, or at least two arrays of the same head can be fed with different building material formulations.

When a system similar to system **110** is employed, all printing heads **16** are optionally and preferably oriented along the indexing direction with their positions along the scanning direction being offset to one another.

When a system similar to system **10** is employed, all printing heads **16** are optionally and preferably oriented radially (parallel to the radial direction) with their azimuthal positions being offset to one another. Thus, in these embodiments, the nozzle arrays of different printing heads are not parallel to each other but are rather at an angle to each other, which angle being approximately equal to the azimuthal offset between the respective heads. For example, one head can be oriented radially and positioned at azimuthal position $\varphi_1$, and another head can be oriented radially and positioned at azimuthal position $\varphi_2$. In this example, the azimuthal offset between the two heads is $\varphi_1$-$\varphi_2$, and the angle between the linear nozzle arrays of the two heads is also $\varphi_1$-$\varphi_2$.

In some embodiments, two or more printing heads can be assembled to a block of printing heads, in which case the printing heads of the block are typically parallel to each other. A block including several inkjet printing heads **16a**, **16b**, **16c** is illustrated in FIG. 2C.

In some embodiments, system **10** comprises a stabilizing structure **30** positioned below heads **16** such that tray **12** is between stabilizing structure **30** and heads **16**. Stabilizing structure **30** may serve for preventing or reducing vibrations of tray **12** that may occur while inkjet printing heads **16** operate. In configurations in which printing heads **16** rotate about axis **14**, stabilizing structure **30** preferably also rotates such that stabilizing structure **30** is always directly below heads **16** (with tray **12** between heads **16** and tray **12**).

Tray **12** and/or printing heads **16** is optionally and preferably configured to move along the vertical direction z, parallel to vertical axis **14** so as to vary the vertical distance between tray **12** and printing heads **16**. In configurations in which the vertical distance is varied by moving tray **12** along the vertical direction, stabilizing structure **30** preferably also moves vertically together with

tray **12**. In configurations in which the vertical distance is varied by heads **16** along the vertical direction, while maintaining the vertical position of tray **12** fixed, stabilizing structure **30** is also maintained at a fixed vertical position.

The vertical motion can be established by a vertical drive **28**. Once a layer is completed, the vertical distance between tray **12** and heads **16** can be increased (*e.g.*, tray **12** is lowered relative to heads **16**) by a predetermined vertical step, according to the desired thickness of the layer subsequently to be printed. The procedure is repeated to form a three-dimensional object in a layer-wise manner.

The operation of inkjet printing heads **16** and optionally and preferably also of one or more other components of system **10**, *e.g.*, the motion of tray **12**, are controlled by a controller **20**. The controller can have an electronic circuit and a non-volatile memory medium readable by the circuit, wherein the memory medium stores program instructions which, when read by the circuit, cause the circuit to perform control operations as further detailed below.

Controller **20** can also communicate with a host computer **24** which transmits digital data pertaining to fabrication instructions based on computer object data, *e.g.*, in a form of a Standard Tessellation Language (STL) or a StereoLithography Contour (SLC) format, Virtual Reality Modeling Language (VRML), Additive Manufacturing File (AMF) format, Drawing Exchange Format (DXF), Polygon File Format (PLY) or any other format suitable for Computer-Aided Design (CAD). The object data formats are typically structured according to a Cartesian system of coordinates. In these cases, computer **24** preferably executes a procedure for transforming the coordinates of each slice in the computer object data from a Cartesian system of coordinates into a polar system of coordinates. Computer **24** optionally and preferably transmits the fabrication instructions in terms of the transformed system of coordinates. Alternatively, computer **24** can transmit the fabrication instructions in terms of the original system of coordinates as provided by the computer object data, in which case the transformation of coordinates is executed by the circuit of controller **20**.

The transformation of coordinates allows three-dimensional printing over a rotating tray. In non-rotary systems with a stationary tray with the printing heads typically reciprocally move above the stationary tray along straight lines. In such systems, the printing resolution is the same at any point over the tray, provided the dispensing rates of the heads are uniform. In system **10**, unlike non-rotary systems, not all the nozzles of the head points cover the same distance over tray **12** during at the same time. The transformation of coordinates is optionally and preferably executed so as to ensure equal amounts of excess material formulation at different radial positions. Representative examples of coordinate transformations according to some embodiments of the

present invention are provided in FIGs. 3A-B, showing three slices of an object (each slice corresponds to fabrication instructions of a different layer of the objects), where FIG. 3A illustrates a slice in a Cartesian system of coordinates and FIG. 3B illustrates the same slice following an application of a transformation of coordinates procedure to the respective slice.

Typically, controller **20** controls the voltage applied to the respective component of the system **10** based on the fabrication instructions and based on the stored program instructions as described below.

Generally, controller **20** controls printing heads **16** to dispense, during the rotation of tray **12**, droplets of building material formulation in layers, such as to print a three-dimensional object on tray **12**.

System **10** optionally and preferably comprises one or more radiation sources **18**, which can be, for example, an ultraviolet or visible or infrared lamp, or other sources of electromagnetic radiation, or electron beam source, depending on the modeling material formulation being used. Radiation source can include any type of radiation emitting device, including, without limitation, light emitting diode (LED), digital light processing (DLP) system, resistive lamp and the like. Radiation source **18** serves for curing or solidifying the modeling material formulation. In various exemplary embodiments of the invention the operation of radiation source **18** is controlled by controller **20** which may activate and deactivate radiation source **18** and may optionally also control the amount of radiation generated by radiation source **18**.

In some embodiments of the invention, system **10** further comprises one or more leveling devices **32** which can be manufactured as a roller or a blade. Leveling device **32** serves to straighten the newly formed layer prior to the formation of the successive layer thereon. In some embodiments, leveling device **32** has the shape of a conical roller positioned such that its symmetry axis **34** is tilted relative to the surface of tray **12** and its surface is parallel to the surface of the tray. This embodiment is illustrated in the side view of system **10** (FIG. 1C).

The conical roller can have the shape of a cone or a conical frustum.

The opening angle of the conical roller is preferably selected such that there is a constant ratio between the radius of the cone at any location along its axis **34** and the distance between that location and axis **14**. This embodiment allows roller **32** to efficiently level the layers, since while the roller rotates, any point *p* on the surface of the roller has a linear velocity which is proportional (*e.g.*, the same) to the linear velocity of the tray at a point vertically beneath point *p*. In some embodiments, the roller has a shape of a conical frustum having a height *h*, a radius $R_1$ at its closest distance from axis **14**, and a radius $R_2$ at its farthest distance from axis **14**, wherein the parameters

$h$, $R_1$ and $R_2$ satisfy the relation $R_1/R_2=(R-h)/h$ and wherein $R$ is the farthest distance of the roller from axis **14** (for example, R can be the radius of tray **12**).

The operation of leveling device **32** is optionally and preferably controlled by controller **20** which may activate and deactivate leveling device **32** and may optionally also control its position along a vertical direction (parallel to axis **14**) and/or a radial direction (parallel to tray **12** and pointing toward or away from axis **14**.

In some embodiments of the present invention printing heads **16** are configured to reciprocally move relative to tray along the radial direction $r$. These embodiments are useful when the lengths of the nozzle arrays **22** of heads **16** are shorter than the width along the radial direction of the working area **26** on tray **12**. The motion of heads **16** along the radial direction is optionally and preferably controlled by controller **20**.

***The object:***

According to some of any of the embodiments described herein, there is provided a three-dimensional object that features, in at least a portion thereof, a hardened elastomeric material.

In some of these embodiments, the hardened elastomeric material features one or more of the following characteristics:

Tear Resistance of at least 4 or at least 4.5 Kg/cm, for example, from 4 to 8, or from 4 to 7.5, or from 4.5 to 8, or from 4.5 to 7.5 Kg/cm, including any intermediate values and subranges therebetween;

Tensile Strength of at least 2, or at least 2.5, MPa, for example, from 2 to 6, or from 2 to 5, or from 2 to 3, or from 2 to 4, or from 3 to 5 MPa, including any intermediate values and subranges therebetween;

Elongation at break of at least 300, or at least 350, %, for example, from 300 to 500, or from 300 to 450, or from 300 to 400, or from 350 to 500, or from 350 to 450, or from 350 to 400 %, including any intermediate values and subranges therebetween; and

Shore A hardness of at least 30, or at least 40, for example, from 30 to 50, or from 30 to 40, or from 35 to 50, or from 40 to 50, or from 35 to 45, including any intermediate values and subranges therebetween.

In some embodiments, the object is stable (maintains its shape, dimension and mechanical properties for at least 2 days and preferably more, e.g., at least one week, one month or one year).

It is expected that during the life of a patent maturing from this application many relevant curable materials will be developed and the scope of the terms curable material and/or curable elastomeric material is intended to include all such new technologies *a priori*.

As used herein the term “about” refers to ± 10 % or ± 5 %.

The terms "comprises", "comprising", "includes", "including", “having” and their conjugates mean "including but not limited to".

The term “consisting of” means “including and limited to”.

The term "consisting essentially of" means that the composition, method or structure may include additional ingredients, steps and/or parts, but only if the additional ingredients, steps and/or parts do not materially alter the basic and novel characteristics of the claimed composition, method or structure.

As used herein, the singular form "a", "an" and "the" include plural references unless the context clearly dictates otherwise. For example, the term "a compound" or "at least one compound" may include a plurality of compounds, including mixtures thereof.

Throughout this application, various embodiments of this invention may be presented in a range format. It should be understood that the description in range format is merely for convenience and brevity and should not be construed as an inflexible limitation on the scope of the invention. Accordingly, the description of a range should be considered to have specifically disclosed all the possible subranges as well as individual numerical values within that range. For example, description of a range such as from 1 to 6 should be considered to have specifically disclosed subranges such as from 1 to 3, from 1 to 4, from 1 to 5, from 2 to 4, from 2 to 6, from 3 to 6 etc., as well as individual numbers within that range, for example, 1, 2, 3, 4, 5, and 6. This applies regardless of the breadth of the range.

Whenever a numerical range is indicated herein, it is meant to include any cited numeral (fractional or integral) within the indicated range. The phrases “ranging/ranges between” a first indicate number and a second indicate number and “ranging/ranges from” a first indicate number “to” a second indicate number are used herein interchangeably and are meant to include the first and second indicated numbers and all the fractional and integral numerals therebetween.

Herein the terms "method" and “process” are used interchangeably and refer to manners, means, techniques and procedures for accomplishing a given task including, but not limited to, those manners, means, techniques and procedures either known to, or readily developed from known manners, means, techniques and procedures by practitioners of the chemical, pharmacological, biological, biochemical and medical arts.

Herein throughout, whenever the phrase “weight percent”, or “% by weight” or “% wt.”, is indicated in the context of embodiments of a formulation (e.g., a modeling formulation), it is meant weight percent of the total weight of the respective uncured formulation.

Herein throughout, an acrylic material is used to collectively describe material featuring one or more acrylate, methacrylate, acrylamide and/or methacrylamide group(s).

Similarly, an acrylic group is used to collectively describe curable groups which are acrylate, methacrylate, acrylamide and/or methacrylamide group(s), preferably acrylate or methacrylate groups (referred to herein also as (meth)acrylate groups).

Herein throughout, the term "(meth)acrylic" encompasses acrylic and methacrylic materials.

Herein throughout, the phrase "linking moiety" or "linking group" describes a group that connects two or more moieties or groups in a compound. A linking moiety is typically derived from a bi- or tri-functional compound, and can be regarded as a bi- or tri-radical moiety, which is connected to two or three other moieties, via two or three atoms thereof, respectively.

Exemplary linking moieties include a hydrocarbon moiety or chain, optionally interrupted by one or more heteroatoms, as defined herein, and/or any of the chemical groups listed below, when defined as linking groups.

When a chemical group is referred to herein as "end group" it is to be interpreted as a substituent, which is connected to another group via one atom thereof.

Herein throughout, the term "hydrocarbon" collectively describes a chemical group composed mainly of carbon and hydrogen atoms. A hydrocarbon can be comprised of alkyl, alkene, alkyne, aryl, and/or cycloalkyl, each can be substituted or unsubstituted, and can be interrupted by one or more heteroatoms. The number of carbon atoms can range from 2 to 30, and is preferably lower, e.g., from 1 to 10, or from 1 to 6, or from 1 to 4. A hydrocarbon can be a linking group or an end group.

Bisphenol A is an example of a hydrocarbon comprised of 2 aryl groups and one alkyl group. Dimethylenecyclohexane is an example of a hydrocarbon comprised of 2 alkyl groups and one cycloalkyl group.

As used herein, the term "amine" describes both a –NR'R" group and a –NR'- group, wherein R' and R" are each independently hydrogen, alkyl, cycloalkyl, aryl, as these terms are defined hereinbelow.

The amine group can therefore be a primary amine, where both R' and R" are hydrogen, a secondary amine, where R' is hydrogen and R" is alkyl, cycloalkyl or aryl, or a tertiary amine, where each of R' and R" is independently alkyl, cycloalkyl or aryl.

Alternatively, R' and R" can each independently be hydroxyalkyl, trihaloalkyl, cycloalkyl, alkenyl, alkynyl, aryl, heteroaryl, heteroalicyclic, amine, halide, sulfonate, sulfoxide, phosphonate, hydroxy, alkoxy, aryloxy, thiohydroxy, thioalkoxy, thioaryloxy, cyano, nitro, azo, sulfonamide, carbonyl, C-carboxylate, O-carboxylate, N-thiocarbamate, O-thiocarbamate, urea, thiourea, N-carbamate, O-carbamate, C-amide, N-amide, guanyl, guanidine and hydrazine.

The term “amine” is used herein to describe a –NR'R" group in cases where the amine is an end group, as defined hereinunder, and is used herein to describe a –NR'- group in cases where the amine is a linking group or is or part of a linking moiety.

The term "alkyl" describes a saturated aliphatic hydrocarbon including straight chain and branched chain groups. Preferably, the alkyl group has 1 to 30, or 1 to 20 carbon atoms. Whenever a numerical range; *e.g.*, "1-20", is stated herein, it implies that the group, in this case the alkyl group, may contain 1 carbon atom, 2 carbon atoms, 3 carbon atoms, etc., up to and including 20 carbon atoms. The alkyl group may be substituted or unsubstituted. Substituted alkyl may have one or more substituents, whereby each substituent group can independently be, for example, hydroxyalkyl, trihaloalkyl, cycloalkyl, alkenyl, alkynyl, aryl, heteroaryl, heteroalicyclic, amine, halide, sulfonate, sulfoxide, phosphonate, hydroxy, alkoxy, aryloxy, thiohydroxy, thioalkoxy, thioaryloxy, cyano, nitro, azo, sulfonamide, C-carboxylate, O-carboxylate, N-thiocarbamate, O-thiocarbamate, urea, thiourea, N-carbamate, O-carbamate, C-amide, N-amide, guanyl, guanidine and hydrazine.

The alkyl group can be an end group, as this phrase is defined hereinabove, wherein it is attached to a single adjacent atom, or a linking group, as this phrase is defined hereinabove, which connects two or more moieties via at least two carbons in its chain. When the alkyl is a linking group, it is also referred to herein as “alkylene” or “alkylene chain”.

Alkene and Alkyne, as used herein, are an alkyl, as defined herein, which contains one or more double bond or triple bond, respectively.

The term "cycloalkyl" describes an all-carbon monocyclic ring or fused rings (*i.e.*, rings which share an adjacent pair of carbon atoms) group where one or more of the rings does not have a completely conjugated pi-electron system. Examples include, without limitation, cyclohexane, adamantine, norbornyl, isobornyl, and the like. The cycloalkyl group may be substituted or unsubstituted. Substituted cycloalkyl may have one or more substituents, whereby each substituent group can independently be, for example, hydroxyalkyl, trihaloalkyl, cycloalkyl, alkenyl, alkynyl, aryl, heteroaryl, heteroalicyclic, amine, halide, sulfonate, sulfoxide, phosphonate, hydroxy, alkoxy, aryloxy, thiohydroxy, thioalkoxy, thioaryloxy, cyano, nitro, azo, sulfonamide, C-carboxylate, O-carboxylate, N-thiocarbamate, O-thiocarbamate, urea, thiourea, N-carbamate, O-carbamate, C-amide, N-amide, guanyl, guanidine and hydrazine. The cycloalkyl group can be an end group, as this phrase is defined hereinabove, wherein it is attached to a single adjacent atom, or a linking group, as this phrase is defined hereinabove, connecting two or more moieties at two or more positions thereof.

The term "heteroalicyclic" describes a monocyclic or fused ring group having in the ring(s) one or more atoms such as nitrogen, oxygen and sulfur. The rings may also have one or more double bonds. However, the rings do not have a completely conjugated pi-electron system. Representative examples are piperidine, piperazine, tetrahydrofurane, tetrahydropyrane, morpholino, oxalidine, and the like.

The heteroalicyclic may be substituted or unsubstituted. Substituted heteroalicyclic may have one or more substituents, whereby each substituent group can independently be, for example, hydroxyalkyl, trihaloalkyl, cycloalkyl, alkenyl, alkynyl, aryl, heteroaryl, heteroalicyclic, amine, halide, sulfonate, sulfoxide, phosphonate, hydroxy, alkoxy, aryloxy, thiohydroxy, thioalkoxy, thioaryloxy, cyano, nitro, azo, sulfonamide, C-carboxylate, O-carboxylate, N-thiocarbamate, O-thiocarbamate, urea, thiourea, O-carbamate, N-carbamate, C-amide, N-amide, guanyl, guanidine and hydrazine. The heteroalicyclic group can be an end group, as this phrase is defined hereinabove, where it is attached to a single adjacent atom, or a linking group, as this phrase is defined hereinabove, connecting two or more moieties at two or more positions thereof.

The term "aryl" describes an all-carbon monocyclic or fused-ring polycyclic (*i.e.*, rings which share adjacent pairs of carbon atoms) groups having a completely conjugated pi-electron system. The aryl group may be substituted or unsubstituted. Substituted aryl may have one or more substituents, whereby each substituent group can independently be, for example, hydroxyalkyl, trihaloalkyl, cycloalkyl, alkenyl, alkynyl, aryl, heteroaryl, heteroalicyclic, amine, halide, sulfonate, sulfoxide, phosphonate, hydroxy, alkoxy, aryloxy, thiohydroxy, thioalkoxy, thioaryloxy, cyano, nitro, azo, sulfonamide, C-carboxylate, O-carboxylate, N-thiocarbamate, O-thiocarbamate, urea, thiourea, N-carbamate, O-carbamate, C-amide, N-amide, guanyl, guanidine and hydrazine. The aryl group can be an end group, as this term is defined hereinabove, wherein it is attached to a single adjacent atom, or a linking group, as this term is defined hereinabove, connecting two or more moieties at two or more positions thereof.

The term "heteroaryl" describes a monocyclic or fused ring (*i.e.*, rings which share an adjacent pair of atoms) group having in the ring(s) one or more atoms, such as, for example, nitrogen, oxygen and sulfur and, in addition, having a completely conjugated pi-electron system. Examples, without limitation, of heteroaryl groups include pyrrole, furan, thiophene, imidazole, oxazole, thiazole, pyrazole, pyridine, pyrimidine, quinoline, isoquinoline and purine. The heteroaryl group may be substituted or unsubstituted. Substituted heteroaryl may have one or more substituents, whereby each substituent group can independently be, for example, hydroxyalkyl, trihaloalkyl, cycloalkyl, alkenyl, alkynyl, aryl, heteroaryl, heteroalicyclic, amine, halide, sulfonate, sulfoxide, phosphonate, hydroxy, alkoxy, aryloxy, thiohydroxy, thioalkoxy, thioaryloxy, cyano,

nitro, azo, sulfonamide, C-carboxylate, O-carboxylate, N-thiocarbamate, O-thiocarbamate, urea, thiourea, O-carbamate, N-carbamate, C-amide, N-amide, guanyl, guanidine and hydrazine. The heteroaryl group can be an end group, as this phrase is defined hereinabove, where it is attached to a single adjacent atom, or a linking group, as this phrase is defined hereinabove, connecting two or more moieties at two or more positions thereof. Representative examples are pyridine, pyrrole, oxazole, indole, purine and the like.

The term "halide" and "halo" describes fluorine, chlorine, bromine or iodine.

The term "haloalkyl" describes an alkyl group as defined above, further substituted by one or more halide.

The term "sulfate" describes a –O–S(=O)$_2$–OR' end group, as this term is defined hereinabove, or an –O-S(=O)$_2$-O– linking group, as these phrases are defined hereinabove, where R' is as defined hereinabove.

The term "thiosulfate" describes a –O–S(=S)(=O)–OR' end group or a –O–S(=S)(=O)–O– linking group, as these phrases are defined hereinabove, where R' is as defined hereinabove.

The term "sulfite" describes an –O–S(=O)–O–R' end group or a -O-S(=O)-O– group linking group, as these phrases are defined hereinabove, where R' is as defined hereinabove.

The term "thiosulfite" describes a –O–S(=S)–O–R' end group or an –O–S(=S)–O– group linking group, as these phrases are defined hereinabove, where R' is as defined hereinabove.

The term "sulfinate" describes a –S(=O)-OR' end group or an –S(=O)–O– group linking group, as these phrases are defined hereinabove, where R' is as defined hereinabove.

The term "sulfoxide" or "sulfinyl" describes a –S(=O)R' end group or an –S(=O)– linking group, as these phrases are defined hereinabove, where R' is as defined hereinabove.

The term "sulfonate" describes a –S(=O)$_2$-R' end group or an –S(=O)$_2$- linking group, as these phrases are defined hereinabove, where R' is as defined herein.

The term "S-sulfonamide" describes a –S(=O)$_2$-NR'R" end group or a –S(=O)$_2$-NR'– linking group, as these phrases are defined hereinabove, with R' and R'' as defined herein.

The term "N-sulfonamide" describes an R'S(=O)$_2$–NR"– end group or a -S(=O)$_2$-NR'– linking group, as these phrases are defined hereinabove, where R' and R'' are as defined herein.

The term "disulfide" refers to a –S–SR' end group or a –S-S- linking group, as these phrases are defined hereinabove, where R' is as defined herein.

The term "phosphonate" describes a -P(=O)(OR')(OR") end group or a -P(=O)(OR')(O)- linking group, as these phrases are defined hereinabove, with R' and R" as defined herein.

The term “thiophosphonate” describes a -P(=S)(OR’)(OR”) end group or a -P(=S)(OR’)(O)- linking group, as these phrases are defined hereinabove, with R’ and R” as defined herein.

The term “phosphinyl” describes a –PR'R" end group or a -PR’- linking group, as these phrases are defined hereinabove, with R’ and R" as defined hereinabove.

The term “phosphine oxide” describes a –P(=O)(R’)(R”) end group or a -P(=O)(R’)- linking group, as these phrases are defined hereinabove, with R’ and R” as defined herein.

The term “phosphine sulfide” describes a –P(=S)(R’)(R”) end group or a -P(=S)(R’)- linking group, as these phrases are defined hereinabove, with R’ and R” as defined herein.

The term “phosphite” describes an –O–PR'(=O)(OR") end group or an –O–PH(=O)(O)- linking group, as these phrases are defined hereinabove, with R’ and R" as defined herein.

The term "carbonyl" or "carbonate" as used herein, describes a -C(=O)-R’ end group or a -C(=O)- linking group, as these phrases are defined hereinabove, with R’ as defined herein.

The term "thiocarbonyl" as used herein, describes a -C(=S)-R’ end group or a -C(=S)- linking group, as these phrases are defined hereinabove, with R’ as defined herein.

The term “oxo” as used herein, describes a (=O) group, wherein an oxygen atom is linked by a double bond to the atom (e.g., carbon atom) at the indicated position.

The term “thiooxo” as used herein, describes a (=S) group, wherein a sulfur atom is linked by a double bond to the atom (e.g., carbon atom) at the indicated position.

The term “oxime” describes a =N–OH end group or a =N-O- linking group, as these phrases are defined hereinabove.

The term “hydroxyl” describes a –OH group.

The term "alkoxy" describes both an -O-alkyl and an -O-cycloalkyl group, as defined herein. The term alkoxide describes –R’$O^-$ group, with R’ as defined herein.

The term "aryloxy" describes both an -O-aryl and an -O-heteroaryl group, as defined herein.

The term "thiohydroxy" or “thiol” describes a -SH group. The term “thiolate” describes a $–S^-$ group.

The term "thioalkoxy" describes both a -S-alkyl group, and a -S-cycloalkyl group, as defined herein.

The term "thioaryloxy" describes both a -S-aryl and a -S-heteroaryl group, as defined herein.

The “hydroxyalkyl” is also referred to herein as “alcohol”, and describes an alkyl, as defined herein, substituted by a hydroxy group.

The term "cyano" describes a -C≡N group.

The term “isocyanate” describes an –N=C=O group.

The term “isothiocyanate” describes an –N=C=S group.

The term "nitro" describes an -$NO_2$ group.

The term “acyl halide” describes a –(C=O)R"" group wherein R"" is halide, as defined hereinabove.

The term "azo" or “diazo” describes an -N=NR’ end group or an -N=N- linking group, as these phrases are defined hereinabove, with R’ as defined hereinabove.

The term "peroxo" describes an –O–OR’ end group or an –O–O- linking group, as these phrases are defined hereinabove, with R’ as defined hereinabove.

The term “carboxylate” as used herein encompasses C-carboxylate and O-carboxylate.

The term “C-carboxylate” describes a -C(=O)-OR’ end group or a -C(=O)-O- linking group, as these phrases are defined hereinabove, where R’ is as defined herein.

The term “O-carboxylate” describes a -OC(=O)R’ end group or a -OC(=O)- linking group, as these phrases are defined hereinabove, where R’ is as defined herein.

A carboxylate can be linear or cyclic. When cyclic, R’ and the carbon atom are linked together to form a ring, in C-carboxylate, and this group is also referred to as lactone. Alternatively, R’ and O are linked together to form a ring in O-carboxylate. Cyclic carboxylates can function as a linking group, for example, when an atom in the formed ring is linked to another group.

The term “thiocarboxylate” as used herein encompasses C-thiocarboxylate and O-thiocarboxylate.

The term “C-thiocarboxylate” describes a -C(=S)-OR’ end group or a -C(=S)-O- linking group, as these phrases are defined hereinabove, where R’ is as defined herein.

The term “O-thiocarboxylate” describes a -OC(=S)R’ end group or a -OC(=S)- linking group, as these phrases are defined hereinabove, where R’ is as defined herein.

A thiocarboxylate can be linear or cyclic. When cyclic, R’ and the carbon atom are linked together to form a ring, in C-thiocarboxylate, and this group is also referred to as thiolactone. Alternatively, R’ and O are linked together to form a ring in O-thiocarboxylate. Cyclic thiocarboxylates can function as a linking group, for example, when an atom in the formed ring is linked to another group.

The term “carbamate” as used herein encompasses N-carbamate and O-carbamate.

The term “N-carbamate” describes an R”OC(=O)-NR’- end group or a -OC(=O)-NR’- linking group, as these phrases are defined hereinabove, with R’ and R” as defined herein.

The term “O-carbamate” describes an -OC(=O)-NR’R” end group or an -OC(=O)-NR’- linking group, as these phrases are defined hereinabove, with R’ and R” as defined herein.

A carbamate can be linear or cyclic. When cyclic, R’ and the carbon atom are linked together to form a ring, in O-carbamate. Alternatively, R’ and O are linked together to form a ring in N-carbamate. Cyclic carbamates can function as a linking group, for example, when an atom in the formed ring is linked to another group.

The term “carbamate” as used herein encompasses N-carbamate and O-carbamate..

The term “thiocarbamate” as used herein encompasses N-thiocarbamate and O-thiocarbamate.

The term “O-thiocarbamate” describes a -OC(=S)-NR’R” end group or a -OC(=S)-NR’- linking group, as these phrases are defined hereinabove, with R’ and R” as defined herein.

The term “N-thiocarbamate” describes an R”OC(=S)NR’- end group or a -OC(=S)NR’- linking group, as these phrases are defined hereinabove, with R’ and R” as defined herein.

Thiocarbamates can be linear or cyclic, as described herein for carbamates.

The term “dithiocarbamate” as used herein encompasses S-dithiocarbamate and N-dithiocarbamate.

The term “S-dithiocarbamate” describes a -SC(=S)-NR’R” end group or a -SC(=S)NR’- linking group, as these phrases are defined hereinabove, with R’ and R” as defined herein.

The term “N-dithiocarbamate” describes an R”SC(=S)NR’- end group or a -SC(=S)NR’- linking group, as these phrases are defined hereinabove, with R’ and R” as defined herein.

The term "urea", which is also referred to herein as “ureido”, describes a -NR’C(=O)-NR”R’’’ end group or a -NR’C(=O)-NR”- linking group, as these phrases are defined hereinabove, where R’ and R” are as defined herein and R"' is as defined herein for R' and R".

The term “thiourea”, which is also referred to herein as “thioureido”, describes a -NR’-C(=S)-NR”R’’’ end group or a -NR’-C(=S)-NR”- linking group, with R’, R” and R’’’ as defined herein.

The term “amide” as used herein encompasses C-amide and N-amide.

The term “C-amide” describes a -C(=O)-NR’R” end group or a -C(=O)-NR’- linking group, as these phrases are defined hereinabove, where R’ and R” are as defined herein.

The term "N-amide" describes a R'C(=O)-NR"- end group or a R'C(=O)-N- linking group, as these phrases are defined hereinabove, where R' and R" are as defined herein.

An amide can be linear or cyclic. When cyclic, R' and the carbon atom are linked together to form a ring, in C-amide, and this group is also referred to as lactam. Cyclic amides can function as a linking group, for example, when an atom in the formed ring is linked to another group.

The term "guanyl" describes a R'R"NC(=N)- end group or a –R'NC(=N)- linking group, as these phrases are defined hereinabove, where R' and R" are as defined herein.

The term "guanidine" describes a –R'NC(=N)-NR"R''' end group or a –R'NC(=N)- NR"- linking group, as these phrases are defined hereinabove, where R', R" and R"' are as defined herein.

The term "hydrazine" describes a -NR'-NR"R''' end group or a -NR'-NR"- linking group, as these phrases are defined hereinabove, with R', R", and R"' as defined herein.

As used herein, the term "hydrazide" describes a -C(=O)-NR'-NR"R"' end group or a -C(=O)-NR'-NR"- linking group, as these phrases are defined hereinabove, where R', R" and R"' are as defined herein.

As used herein, the term "thiohydrazide" describes a -C(=S)-NR'-NR"R"' end group or a -C(=S)-NR'-NR"- linking group, as these phrases are defined hereinabove, where R', R" and R"' are as defined herein.

The term "cyanurate" describes a 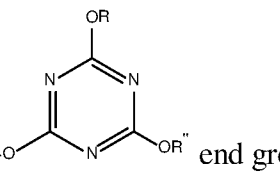 end group or 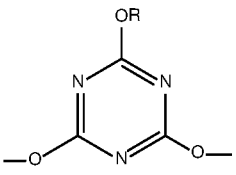 linking group, with R' and R'' as defined herein.

The term "isocyanurate" describes a 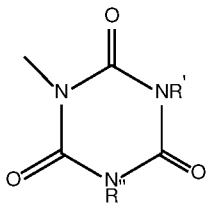 end group or a 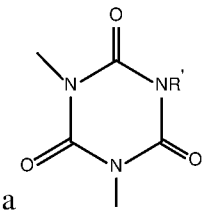 linking group, with R' and R'' as defined herein.

The term "thiocyanurate" describes a 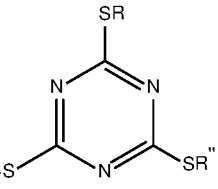 end group or 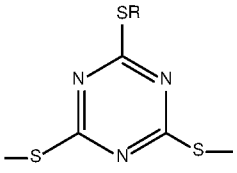 linking group, with R' and R'' as defined herein.

As used herein, the term "alkylene glycol" describes a –O-[(CR'R'')$_z$-O]$_y$-R''' end group or a –O-[(CR'R'')$_z$-O]$_y$- linking group, with R', R'' and R''' being as defined herein, and with z

being an integer of from 1 to 10, preferably, from 2 to 6, more preferably 2 or 3, and y being an integer of 1 or more. Preferably R' and R'' are both hydrogen. When z is 2 and y is 1, this group is ethylene glycol. When z is 3 and y is 1, this group is propylene glycol. When y is 2-4, the alkylene glycol is referred to herein as oligo(alkylene glycol).

Herein, an "ethoxylated" material describes an acrylic or methacrylic compound which comprises one or more alkylene glycol groups, or, preferably, one or more alkylene glycol chains, as defined herein. Ethoxylated (meth)acrylate materials can be monofunctional, or, preferably, multifunctional, namely, difunctional, trifunctional, tetrafunctional, etc.

In multifunctional materials, typically, each of the (meth)acrylate groups are linked to an alkylene glycol group or chain, and the alkylene glycol groups or chains are linked to one another through a branching unit, such as, for example, a branched alkyl, cycloalkyl, aryl (e.g., Bisphenol A), etc.

In some embodiments, the ethoxylated material comprises at least one, or at least two ethoxylated group(s)s, that is, at least one or at least two alkylene glycol moieties or groups. Some or all of the alkylene glycol groups can be linked to one another to form an alkylene glycol chain. For example, an ethoxylated material that comprises 30 ethoxylated groups can comprise a chain of 30 alkylene glycol groups linked to one another, two chains, each, for example, of 15 alkylene glycol moieties linked to one another, the two chains linked to one another via a branching moiety, or three chains, each, for example, of 10 alkylene glycol groups linked to one another, the three chains linked to one another via a branching moiety. Shorter and longer chains are also contemplated.

The ethoxylated material can comprise one, two or more alkylene glycol chains, of any length.

The term "branching unit" as used herein describes a multi-radical, preferably aliphatic or alicyclic group. By "multi-radical" it is meant that the unit has two or more attachment points such that it links between two or more atoms and/or groups or moieties.

In some embodiments, the branching unit is derived from a chemical moiety that has two, three or more functional groups. In some embodiments, the branching unit is a branched alkyl or a cycloalkyl (alicyclic) or an aryl (e.g., phenyl) as defined herein.

It is appreciated that certain features of the invention, which are, for clarity, described in the context of separate embodiments, may also be provided in combination in a single embodiment. Conversely, various features of the invention, which are, for brevity, described in the context of a single embodiment, may also be provided separately or in any suitable sub-combination or as suitable in any other described embodiment of the invention. Certain features described in the

context of various embodiments are not to be considered essential features of those embodiments, unless the embodiment is inoperative without those elements.

Various embodiments and aspects of the present invention as delineated hereinabove and as claimed in the claims section below find experimental support in the following examples.

## EXAMPLES

Reference is now made to the following examples, which together with the above descriptions illustrate some embodiments of the invention in a non-limiting fashion.

### *EXPERIMENTAL METHODS*

Shore A Hardness was determined in accordance with ASTM D2240.

Elastic Modulus (Modulus of Elasticity) was determined from the Strength-Strain curves, in accordance with ASTM D412.

Tensile Strength was determined in accordance with ASTM D412 and is expressed in MPa units.

Elongation at break was determined in accordance with ASTM D412 and is expressed as %.

Tear Resistance (TR) was determined in accordance with ASTM D 624 and is expressed by Kg/cm units.

Printability was determined by inspecting formulation's compatibility with a 3D-inkjet system (e.g., as described in FIGs. 1B-D; and/or a system equipped with a LED source of curing energy), in terms of viscosity, reactivity, jettability, etc.

Stickiness/tackiness was determined by visually inspecting adhesion to system components (e.g., receiving tray, roller, etc.)

Stability was determined by measuring one or more of the above-mentioned mechanical properties 1, 2, 3 or more days following printing. A change of less than 20 % or less than 10 % in mechanical properties indicates good stability and a higher change indicates no stability.

Curling and deformation were visually inspected (see, for example, FIGs. 7A-B).

Formulations were prepared by mixing all components at room temperature unless otherwise indicated. Powder components such as photo initiators were dissolved at 85 degrees for 30 minutes.

## *RESULTS*

The present inventors have previously uncovered that introducing silica particles, preferably silica particles that are functionalized by curable groups, to elastomeric formulations usable in additive manufacturing such as 3D inkjet printing provides for improved properties of the obtained hardened rubber-like material. Such formulations are described, for example, in WO 2017/208238 and are marketed under the trade name "Agilus" family.

While such formulations indeed provide for hardened materials that feature high elongation along with relatively high tear resistance, the present inventors have uncovered that the high degree of covalent cross-linking that results from the functionalized silica particles in combination with multi-functional curable materials present in the formulation may lead, under certain printing conditions, to deformation, high curling and/or volume shrinkage, of the obtained three-dimensional objects. The present inventors have further uncovered that such formulations provide materials with inferior properties when used in systems such as described in FIGs. 1B-D, which utilize LED as the source of curing energy and are characterized by a lower printing temperature compared to other systems.

In a search for formulations that provide rubber-like materials when hardened, the present inventors have conceived using curable materials that are capable of participating in "physical cross-linking", namely, that are capable of forming cross-linking via hydrogen bonds formation, while considering that, contrary to covalent cross-linking, such a "physical" cross-linking results in improved elongation and improved tear resistance, while minimizing and even nullifying deformation, curling and/or volume shrinkage.

The present inventors have uncovered that using a curable material that is capable of forming multiple hydrogen bonds, such as, but not limited to, methacrylamide, and as described in further detail herein, in combination with elastomeric materials that are also capable of participating in hydrogen bonds formation, results in formulations that provide, when hardened, rubber-like materials that exhibit improved performance, and which are also suitable for use in a system as described in FIGs. 1B-D, which comprises LED irradiation source.

Table 1A below presents the components of exemplary reference elastomeric formulations. Ref. 1 refers to a formulation of the Agilus family, and is also referred to herein as Agilus Silica or Agilus Si, and is as described, for example, in WO 2017/208238, and Ref. 2 refers to a formulation of the Tango family. Table 1B presents the components of various formulations tested in a search for improved formulations.

Component A is one or more curable (non-elastomeric) mono-functional material(s) as described herein;

Component B is one or more elastomeric mono-functional material(s) as described herein;

Component C is one or more curable elastomeric multi-functional material(s) as described herein, preferably di-functional material(s)

Component D is one or more curable (non-elastomeric) di-functional material(s), with D1 referring to such di-functional material(s) and D2 referring to tri-functional or higher-functional material(s).

Component E is one or more curable material(s) capable of forming hydrogen bonds, as described herein.

Component F represents silica particles, including functionalized silica particles, as described herein.

**Table 1A**

| | **Ref. 1** | **Ref. 2** |
|---|---|---|
| A | 15-25 | 15-25 |
| B | 55-65 | 55-65 |
| C | 10-15 | 15-20 |
| D1 | 0 | 0 |
| D2 | 0 | 0 |
| E | 0 | 0 |
| F | 2-10 | 0 |
| G | 0.1-1 | 0.1-1 |
| PI | 3-5 | 3-5 |

**Table 1B**

| | **14** | **12** | **11** | **10** | **9** | **8** | **7** | **6** | **5** | **11B** | **6B3** |
|---|---|---|---|---|---|---|---|---|---|---|---|
| A | 15-25 | 15-25 | 15-25 | 15-25 | 15-25 | 15-25 | 15-25 | 10-15 | 15-20 | 15-25 | 15-25 |
| B | 55-65 | 55-65 | 55-65 | 55-65 | 55-65 | 55-65 | 55-65 | 55-65 | 55-65 | 55-65 | 55-65 |
| C | 10-15 | 10-15 | 10-15 | 10-15 | 10-15 | 10-15 | 10-15 | 10-15 | 10-15 | 10-15 | **15-20** |
| D1 | 0 | 0 | 0 | 0 | **1-5** | **1-5** | **3-7** | **3-7** | **3-7** | 0 | 0 |
| D2 | 1 | 1 | 1 | 1 | 0 | 0 | 0 | 0 | 0 | 1 | 2 |
| E | 1.5-2 | 1.5-2 | 1.5-2 | 1.5-2 | 1.5-2 | 1.5-2 | 0 | 1.5-2 | 1.5-2 | 1.5-2 | 1.5-2 |
| F | 0 | 0 | 0 | 0 | 0 | 0 | 0 | 0 | 0 | 0 | 0 |
| G | 0.1-1 | 0.1-1 | 0.1-1 | 0.1-1 | 0.1-1 | 0.1-1 | 0.1-1 | 0.1-1 | 0.1-1 | 0.1-1 | 0.1-1 |
| PI | 1-2 | 1-2 | 1-2 | 1-2 | 1-2 | 1-2 | 1-2 | 1-2 | 1-2 | 1-2 | 1-2 |

Table 2 presents the mechanical properties of objects printed using a 3D-inkjet printing system as shown, for example, in FIG. 1A, equipped with a mercury lamp as a source of curing energy for the reference formulations and using a J55 inkjet printing system (Stratasys, Ltd., Israel), as shown in FIGs. 1B-D, equipped with LED as a source of curing energy, for the exemplary tested elastomeric formulations.

**Table 2**

| | **Tensile Strength** | **Elongation at break** | **Shore Hardness** | **Tear Resistance** | **Printability** | **Stickiness** | **Stability** |
|---|---|---|---|---|---|---|---|
| **14** | **>3** | **350-420** | **40-50** | **5** | **good** | **med** | **OK** |
| **12** | **>3** | **350-420** | **40-50** | **>5** | **good** | **med** | **OK** |
| **11** | **>2** | **350-420** | **30-40** | **4-5** | **good** | **med** | **OK** |
| **10** | **>2** | **350-420** | **35-45** | **4-5** | **good** | **med** | **OK** |
| **9** | <2 | 350-420 | 30-40 | 4-5 | good | good | fail |
| **8** | >2 | 350-420 | 35-45 | >5 | med | good | fail |
| **7** | NA | NA | NA | NA | null | NA | NA |
| **6** | <2 | 250-300 | 35-45 | 4-5 | fail | med | fail |
| **5** | >2 | 300-350 | 45-55 | 6-7 | fail | med | fail |
| **11B** | **>3.5** | **350-420** | **45-55** | **6-7** | **good** | **good** | **OK** |
| **6B3** | **>2** | **250-300** | **35-45** | **NA** | **good** | **med** | **OK** |
| **Ref. 1*** | 2.4-3.1 | 220-240 | 30-35 | 5-7 | good* | good* | good* |
| **Ref. 2** | 0.8-1.5 | 170-200 | 26-28 | 2-4 | NA | NA | NA |

* When Ref. 1 formulation is printed on the same system as the tested exemplary formulations, printability and stickiness are bad (fail).

*Objects made of Ref. 1 formulation feature substantial curling and deformation while these are negligible in exemplary formulations according to the present embodiments.

FIGs. 7A-B present exemplary photographs showing the deformation and curling observed for objects made of the reference elastomeric formulation (left objects) and the lack thereof in objects made of the exemplary elastomeric formulation according to the present embodiments (right objects).

As can be seen in Table 2 and from the other data obtained, formulations according to the present embodiments feature improved elongation and tear resistance compared to the reference formulations. Formulations that lack component E were incompatible. Formulations that include component D at a concentration higher than 5 % performed inferiorly and the same was observed for formulations that lack component D2.

These data indicate that best performance, in terms of both the mechanical properties of the obtained object and the compatibility with the 3D inkjet system, is obtained with formulations that comprise the following components:

A – 15-20 %;

B – 55-65 %;

C – 10-15 %;

D1 – 0-5 %;

D2 – 1-2 %;

E – 1.5-2 %;

F - < 1%

Although the invention has been described in conjunction with specific embodiments thereof, it is evident that many alternatives, modifications and variations will be apparent to those skilled in the art. Accordingly, it is intended to embrace all such alternatives, modifications and variations that fall within the spirit and broad scope of the appended claims.

It is the intent of the applicant(s) that all publications, patents and patent applications referred to in this specification are to be incorporated in their entirety by reference into the specification, as if each individual publication, patent or patent application was specifically and individually noted when referenced that it is to be incorporated herein by reference. In addition, citation or identification of any reference in this application shall not be construed as an admission that such reference is available as prior art to the present invention. To the extent that section

headings are used, they should not be construed as necessarily limiting. In addition, any priority document(s) of this application is/are hereby incorporated herein by reference in its/their entirety.

WHAT IS CLAIMED IS:

1. A curable formulation that provides, when hardened, an elastomeric material, the formulation comprising:

a curable, mono-functional, elastomeric material in a total amount of from 50 to 70 % by weight of the total weight of the formulation;

a curable, multi-functional, elastomeric material in a total amount of from 20 to 40 % by weight of the total weight of the formulation;

a curable, multi-functional, non-elastomeric material in a total amount of no more than 5 % by weight of the total weight of the formulation; and

a curable material that comprises at least two hydrogen bond forming groups, in a total amount of from about 1 to about 20, or from about 1 to about 10 % by weight of the total weight of the formulation.

2. The curable formulation of claim 1, wherein each of said curable materials is a UV-curable material.

3. The curable formulation of claim 1 or 2, wherein each of said curable materials is a (meth)acrylic material.

4. The curable formulation of any one of claims 1 to 3, wherein said hydrogen bond-forming group comprises at least one hydrogen bond donor group and at least one hydrogen bond acceptor group.

5. The curable formulation of claim 4, wherein the at least two hydrogen bond-forming groups are separated from one another by no more than 2 atoms.

6. The curable formulation of any one of claims 1 to 4, wherein a ratio between a number of said hydrogen bond forming groups and molecular weight of the material containing same is higher than 0.01.

7. The curable formulation of any one of claims 1 to 6, wherein said curable material that comprises at least two hydrogen bond-forming groups is a (meth)acrylamide, preferably a methacrylamide.

8. The curable formulation of any one of claims 1 to 7, wherein a concentration of the curable material that comprises at least two hydrogen bond-forming groups ranges from 1 to 10 %, or from 1 to 5 %, or from 1 to 3 %, or from 1.5 to 2 %, by weight, of the total weight of the formulation.

9. The curable formulation of any one of claims 1 to 8, wherein at least one of said curable elastomeric materials is capable of forming hydrogen bonds.

10. The curable formulation of claim 9, wherein at least 50 %, or at least 60 %, or at least 70 %, or at least 80 %, of the curable materials comprise a curable material that is capable of forming hydrogen bonds.

11. The curable formulation of claim 9 or 10, wherein said curable material capable of forming hydrogen bonds comprises at least one carbamate group.

12. The curable material of claim 11, wherein said curable material capable of forming hydrogen bonds is a urethane (meth)acrylate.

13. The curable formulation of any one of claims 1 to 12, wherein a concentration of said curable, multi-functional elastomeric material ranges from 10 to 20, or from 10 to 15, % by weight of the total weight of the formulation.

14. The curable formulation of any one of claims 1 to 13, wherein said curable, multi-functional elastomeric material comprises a multi-functional urethane acrylate.

15. The curable formulation of any one of claims 1 to 14, wherein said curable, mono-functional elastomeric material comprises a mono-functional urethane acrylate.

16. The curable formulation of any one of claims 1 to 15, wherein a weight ratio of said curable, mono-functional elastomeric material and said curable material that comprises at least two hydrogen bond forming groups ranges from 20:1 to 60:1, or from 30:1 to 50:1.

17. The curable formulation of any one of claims 1 to 16, further comprising a mono-functional non-elastomeric curable material.

18. The curable formulation of claim 17, wherein a concentration of said additional mono-functional curable material ranges from 15 to 25, % by weight of the total weight of the formulation.

19. The curable formulation of any one of claims 1 to 18, wherein said multi-functional non-elastomeric curable material comprises a tertiary amine group.

20. The curable formulation of any one of claims 1 to 19, wherein said multi-functional non-elastomeric curable material comprises a material that features a functionality higher than 2.

21. The curable formulation of claim 20, wherein a concentration of said multi-functional non-elastomeric curable material ranges from 0.1 to 2, or from 0.1 to 1 % by weight, of the total weight of the formulation.

22. The curable formulation of any one of claims 1 to 21, further comprising at least one material selected from a surfactant, a dispersant, a filler, a dye, a pigment, an inhibitor and an anti-oxidant.

23. The curable formulation of any one of claims 1 to 22, characterized, when hardened, by Tear Resistance of at least 4 or at least 4.5 Kg/cm.

24. The curable formulation of any one of claims 1 to 23, characterized, when hardened, by Tensile Strength of at least 2, or at least 2.5, MPa.

25. The curable formulation of any one of claims 1 to 24, characterized, when hardened, by elongation at break of at least 300, or at least 350, %.

26. The curable formulation of any one of claims 1 to 25, characterized, when hardened, by Shore A hardness of at least 30, or at least 40.

27. The curable formulation of any one of claims 1 to 26, characterized, when hardened, by an average Tg of no more than 15 °C.

28. The curable formulation of any one of claims 1 to 27, usable as a modeling material formulation in additive manufacturing of a three-dimensional object that comprises, in at least a portion thereof, an elastomeric material.

29. A method of additive manufacturing a three-dimensional object comprising, in at least a portion thereof, an elastomeric material, the method comprising sequentially forming a plurality of layers in a configured pattern corresponding to the shape of the object, thereby forming the object,

wherein the formation of each of at least a few of said layers comprises dispensing a modeling material formulation as defined in any one of claims 1-28, and exposing the dispensed modeling material to a curing energy to thereby form a cured modeling material,

thereby manufacturing the three-dimensional object.

30. The method of claim 29, wherein said curing energy comprises UV irradiation.

31. The method of claim 30, wherein said UV irradiation is from a LED energy source.

32. The method of any one of claims 29 to 31, wherein said dispensing is at a temperature of no more than 40, or no more than 35 °C.

33. A three-dimensional object manufactured by the method of any one of claims 29 to 32.

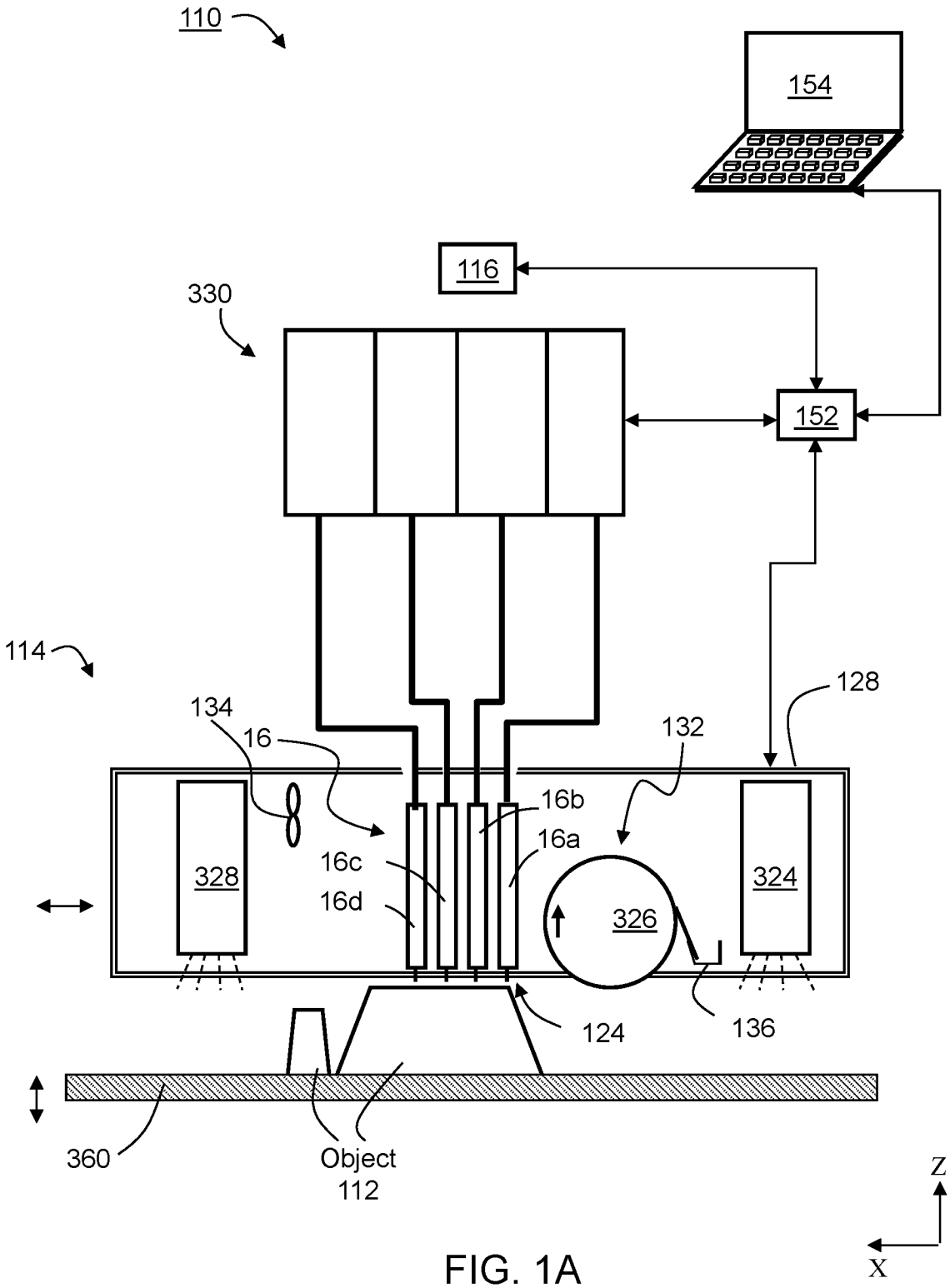
110
154
116
330
152
114
128
134
16
132
16b
16a
16c
16d
328
326
324
124
136
360
Object
112
Z
X

FIG. 1A

FIG. 1B

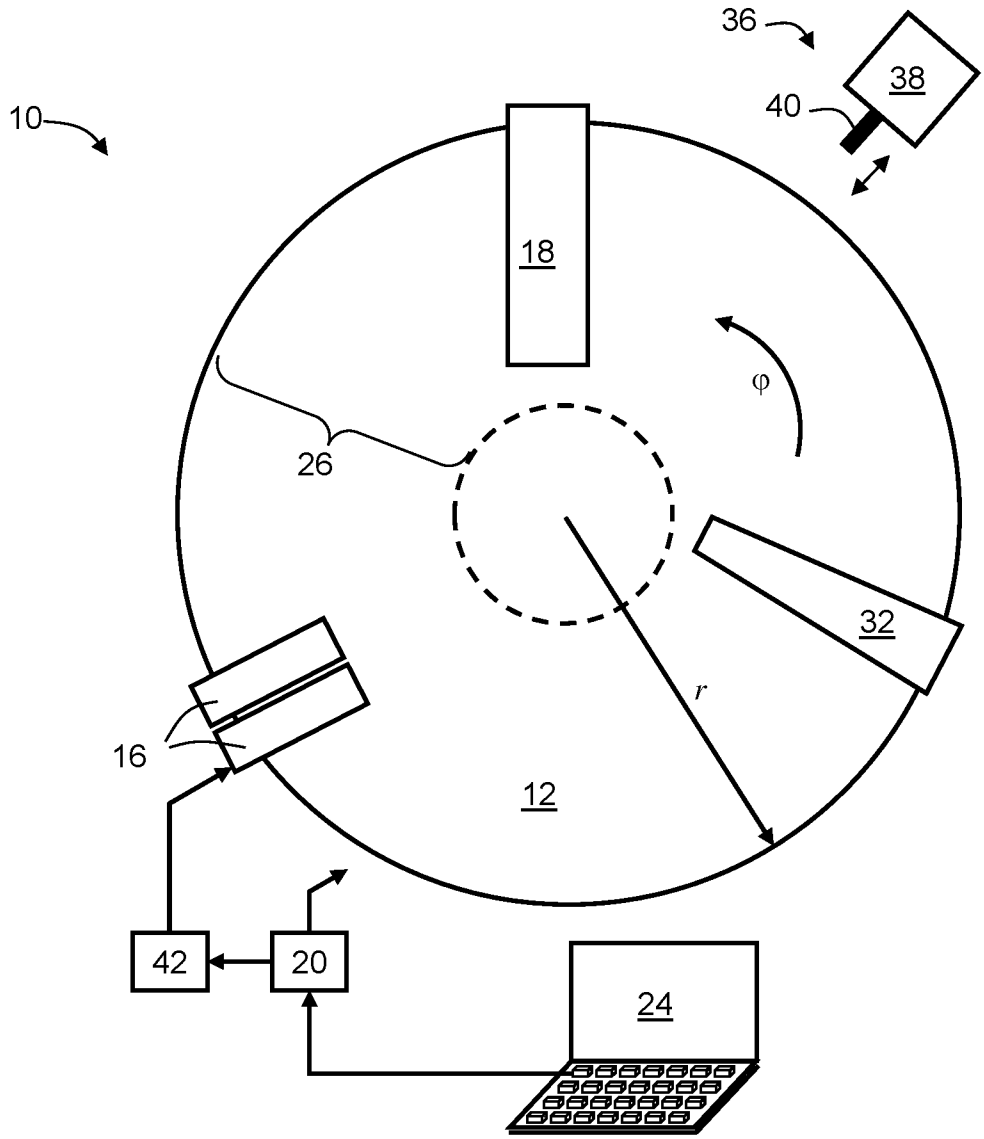


FIG. 1C

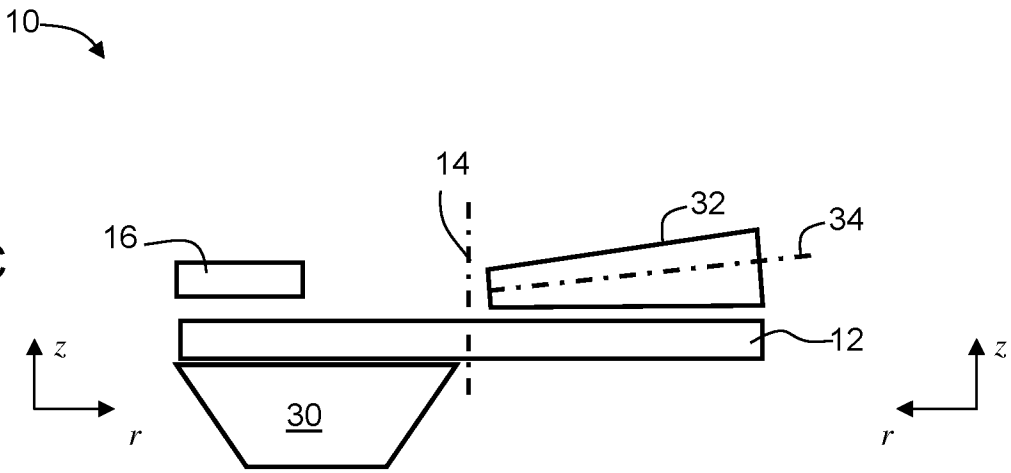

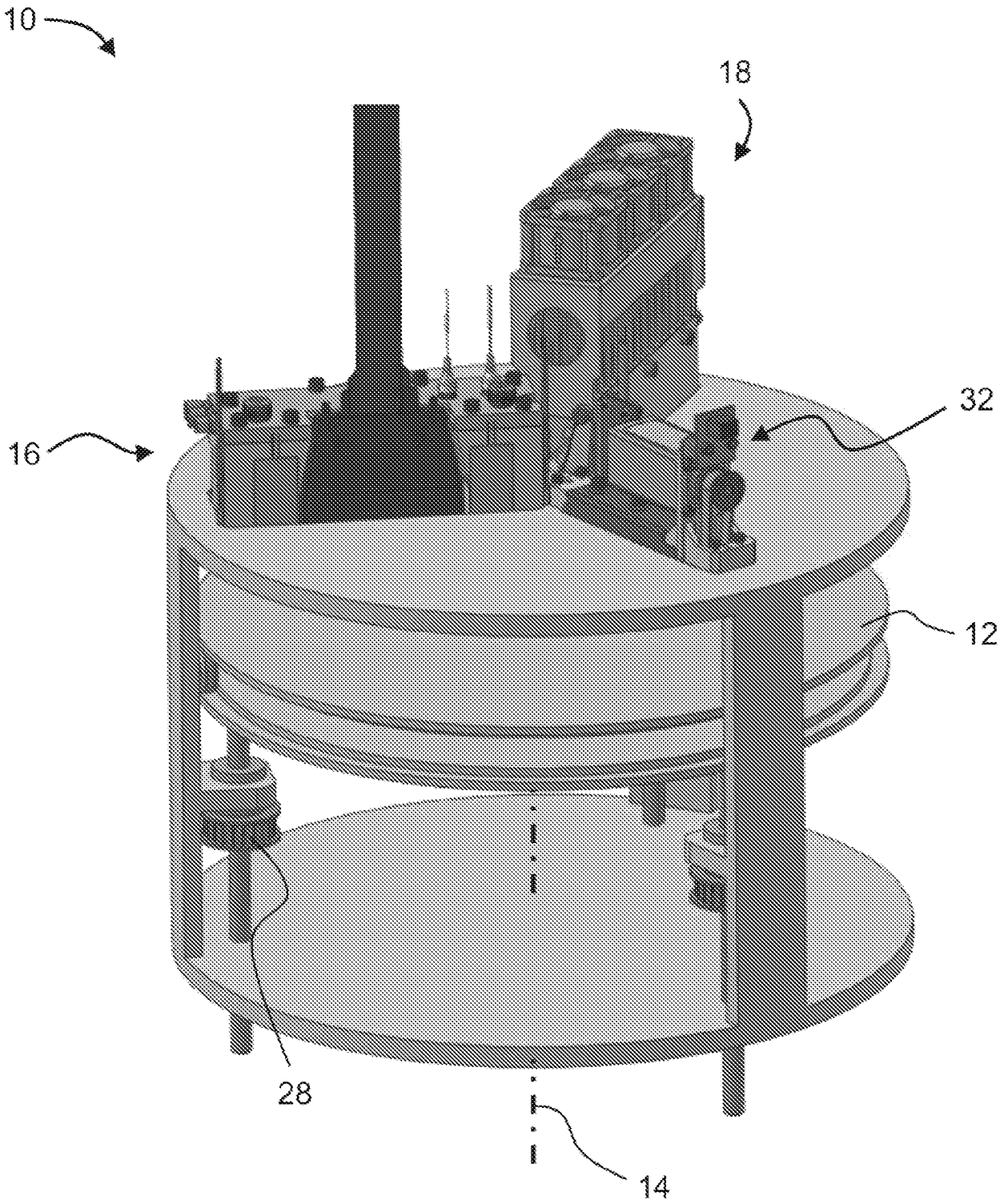


FIG. 1D

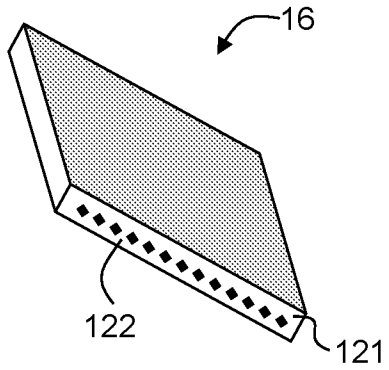


FIG. 2A

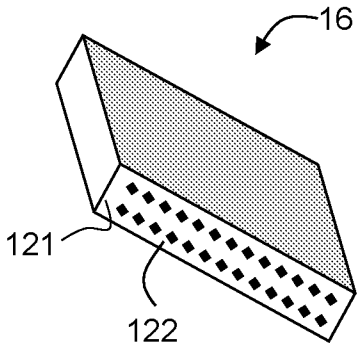


FIG. 2B

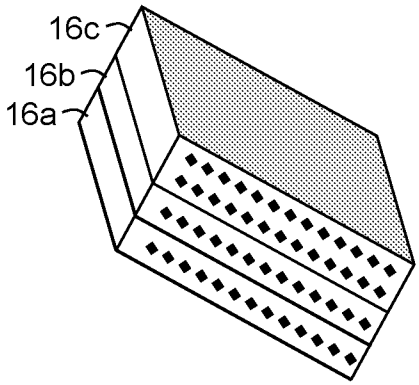


FIG. 2C

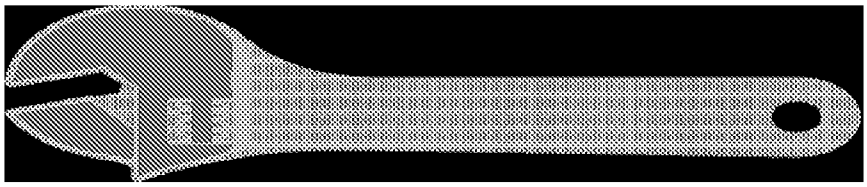


FIG. 3A

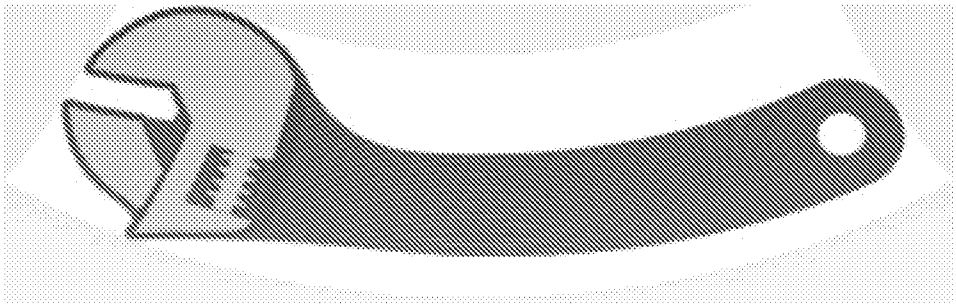

FIG. 3B

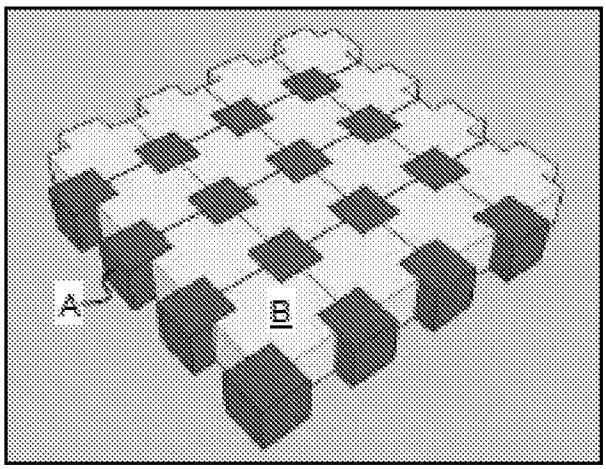


FIG. 4

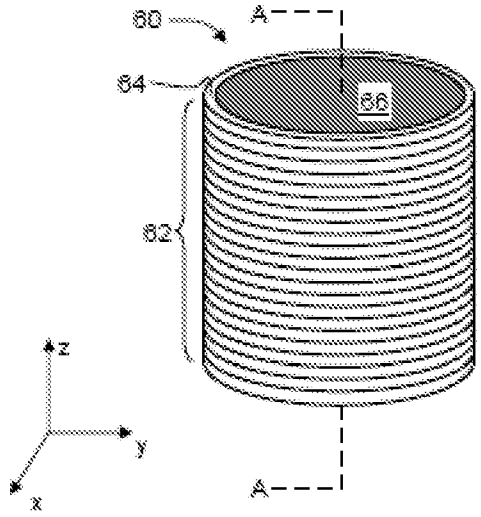


FIG. 5A

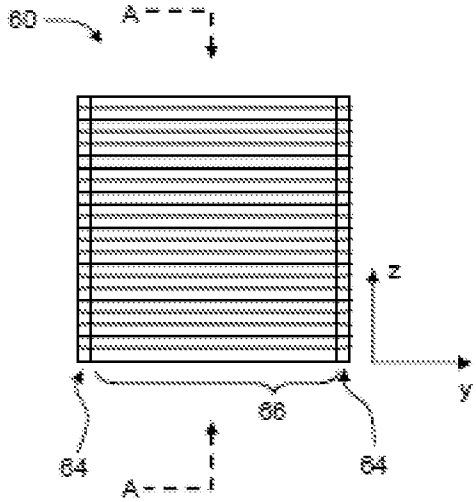


FIG. 5B

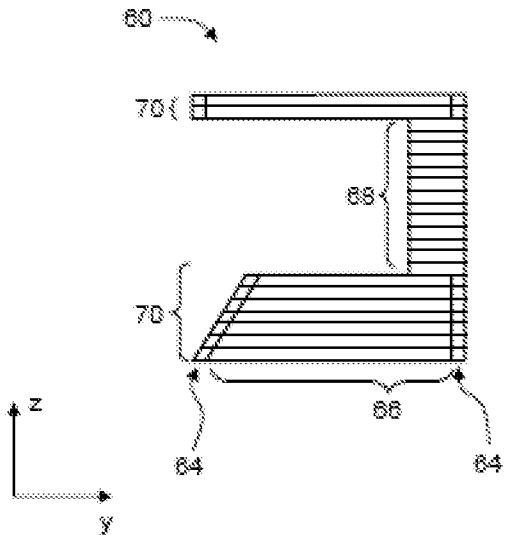


FIG. 5C

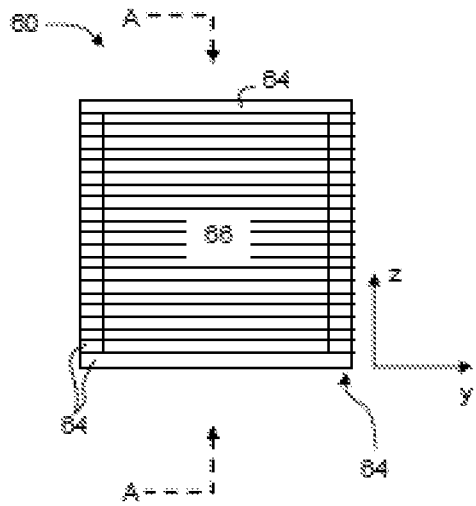


FIG. 5D

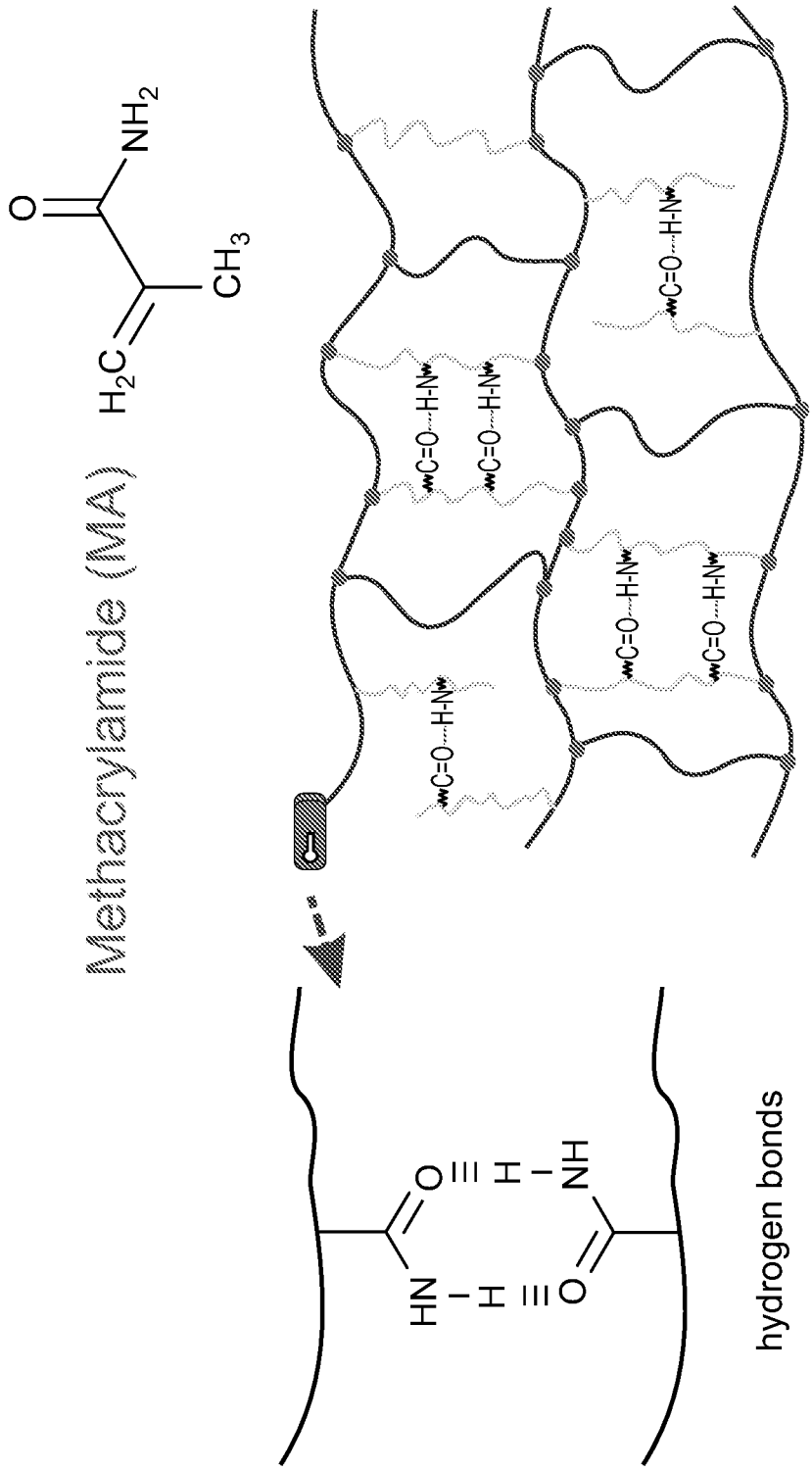


FIG. 6

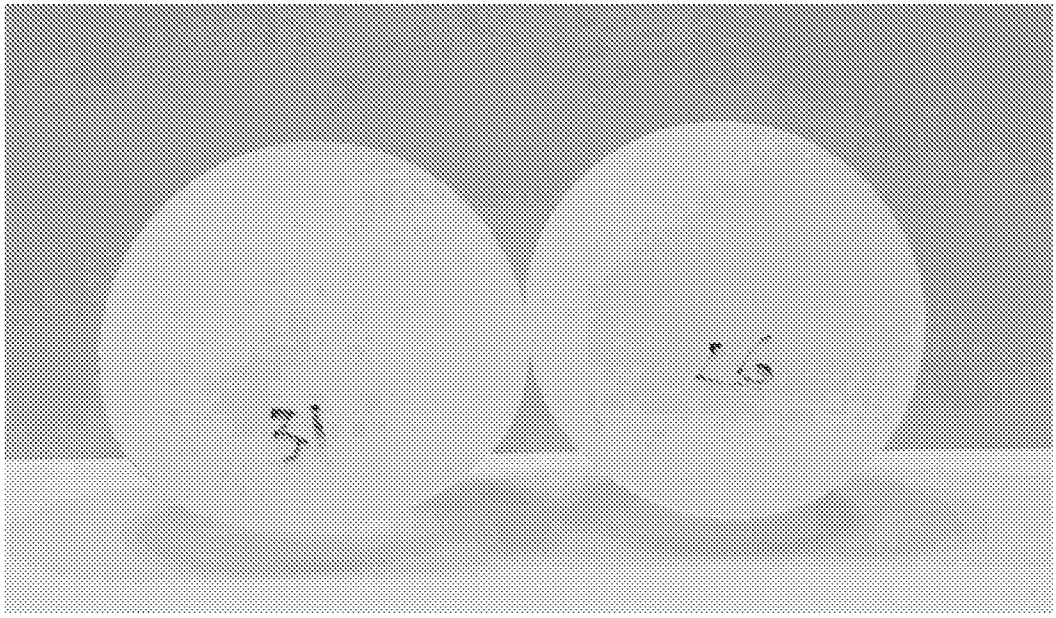

FIG. 7A

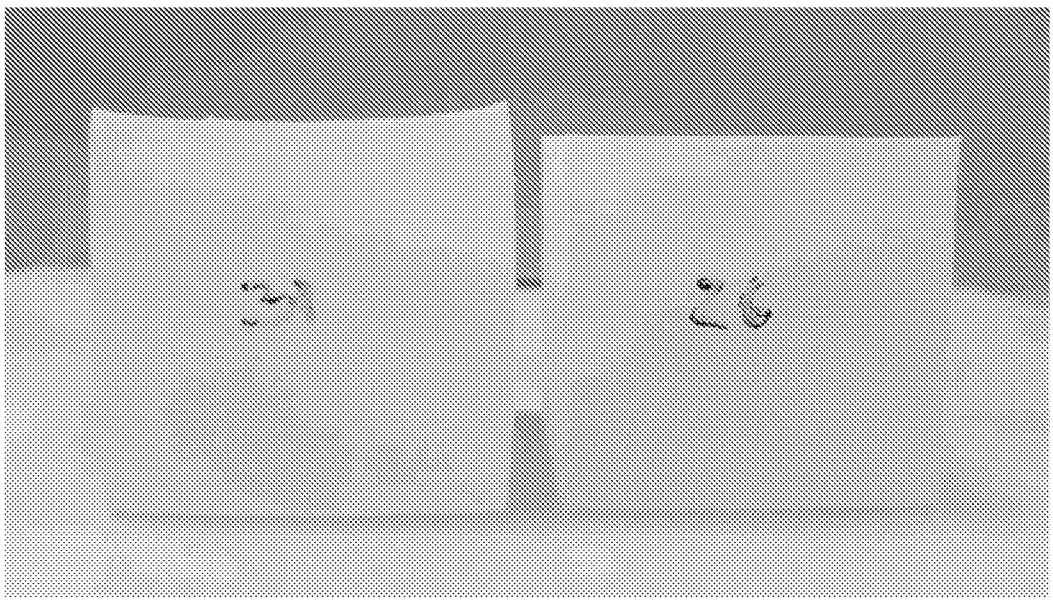

FIG. 7B

# INTERNATIONAL SEARCH REPORT

International application No
PCT/IL2022/050639

A. CLASSIFICATION OF SUBJECT MATTER
INV. C08F290/00 B33Y70/00
ADD.

According to International Patent Classification (IPC) or to both national classification and IPC

B. FIELDS SEARCHED

Minimum documentation searched (classification system followed by classification symbols)
C08F B33Y

Documentation searched other than minimum documentation to the extent that such documents are included in the fields searched

Electronic data base consulted during the international search (name of data base and, where practicable, search terms used)
EPO-Internal, WPI Data

C. DOCUMENTS CONSIDERED TO BE RELEVANT

| Category* | Citation of document, with indication, where appropriate, of the relevant passages | Relevant to claim No. |
|---|---|---|
| Y | WO 2017/208238 A1 (STRATASYS LTD [IL])<br>7 December 2017 (2017-12-07)<br>cited in the application | 1-5,9,<br>11,12,<br>14,15,<br>17,22,<br>29-33 |
| A | page 1, lines 4-8<br>page 22, line 10 - page 28, line 14<br>pages 31-32; tables 1,2 | 6-8,10,<br>13,16,<br>18-21,<br>23-28 |

-----

-/--

[x] Further documents are listed in the continuation of Box C.

[x] See patent family annex.

* Special categories of cited documents :

"A" document defining the general state of the art which is not considered to be of particular relevance

"E" earlier application or patent but published on or after the international filing date

"L" document which may throw doubts on priority claim(s) or which is cited to establish the publication date of another citation or other special reason (as specified)

"O" document referring to an oral disclosure, use, exhibition or other means

"P" document published prior to the international filing date but later than the priority date claimed

"T" later document published after the international filing date or priority date and not in conflict with the application but cited to understand the principle or theory underlying the invention

"X" document of particular relevance;; the claimed invention cannot be considered novel or cannot be considered to involve an inventive step when the document is taken alone

"Y" document of particular relevance;; the claimed invention cannot be considered to involve an inventive step when the document is combined with one or more other such documents, such combination being obvious to a person skilled in the art

"&" document member of the same patent family

| Date of the actual completion of the international search | Date of mailing of the international search report |
|---|---|
| 4 October 2022 | 12/10/2022 |

| Name and mailing address of the ISA/ | Authorized officer |
|---|---|
| European Patent Office, P.B. 5818 Patentlaan 2<br>NL - 2280 HV Rijswijk<br>Tel. (+31-70) 340-2040,<br>Fax: (+31-70) 340-3016 | Plehiers, Mark |

1

Form PCT/ISA/210 (second sheet) (April 2005)

# INTERNATIONAL SEARCH REPORT

International application No
PCT/IL2022/050639

C(Continuation). DOCUMENTS CONSIDERED TO BE RELEVANT

| Category* | Citation of document, with indication, where appropriate, of the relevant passages | Relevant to claim No. |
|---|---|---|
| Y | US 2020/399411 A1 (SHPAYZER ELENA [IL] ET AL) 24 December 2020 (2020-12-24) | 1-5,9, 11,12, 14,15, 17,22, 29-33 |
| A | paragraph [0379]; table 9 | 6-8,10, 13,16, 18-21, 23-28 |
| A | WO 2020/064522 A1 (BASF SE [DE]) 2 April 2020 (2020-04-02) | 1-28 |

1

# INTERNATIONAL SEARCH REPORT

Information on patent family members

International application No
PCT/IL2022/050639

| Patent document cited in search report | Publication date | Patent family member(s) | Publication date |
|---|---|---|---|
| WO 2017208238 A1 | 07-12-2017 | CN 109476148 A | 15-03-2019 |
| | | EP 3463882 A1 | 10-04-2019 |
| | | IL 263376 A | 31-12-2018 |
| | | JP 7013393 B2 | 31-01-2022 |
| | | JP 2019517403 A | 24-06-2019 |
| | | KR 20190015421 A | 13-02-2019 |
| | | US 2019224914 A1 | 25-07-2019 |
| | | US 2022219390 A1 | 14-07-2022 |
| | | WO 2017208238 A1 | 07-12-2017 |
| US 2020399411 A1 | 24-12-2020 | CN 111836723 A | 27-10-2020 |
| | | EP 3732044 A1 | 04-11-2020 |
| | | IL 275769 A | 31-08-2020 |
| | | JP 2021509640 A | 01-04-2021 |
| | | US 2020399411 A1 | 24-12-2020 |
| | | WO 2019130323 A1 | 04-07-2019 |
| WO 2020064522 A1 | 02-04-2020 | CN 112638968 A | 09-04-2021 |
| | | EP 3856807 A1 | 04-08-2021 |
| | | JP 2022514433 A | 10-02-2022 |
| | | KR 20210065101 A | 03-06-2021 |
| | | US 2022033678 A1 | 03-02-2022 |
| | | WO 2020064522 A1 | 02-04-2020 |