(12) INTERNATIONAL APPLICATION PUBLISHED UNDER THE PATENT COOPERATION TREATY (PCT)

(19) World Intellectual Property Organization
International Bureau

(43) International Publication Date
28 January 2010 (28.01.2010)

PCT

(10) International Publication Number
WO 2010/010355 A3

(51) International Patent Classification:
B01L 3/00 (2006.01) *B01D 29/86* (2006.01)
C12M 3/06 (2006.01)

(21) International Application Number:
PCT/GB2009/001830

(22) International Filing Date:
24 July 2009 (24.07.2009)

(25) Filing Language: English

(26) Publication Language: English

(30) Priority Data:
0813644.2 25 July 2008 (25.07.2008) GB
0817515.0 24 September 2008 (24.09.2008) GB

(71) Applicant *(for all designated States except US)*: **SMITH & NEPHEW PLC** [GB/GB]; 15 Adam Street, London WC2N 6LA (GB).

(72) Inventors; and

(75) Inventors/Applicants *(for US only)*: **CURRAN, Stephen, John** [GB/GB]; Smith & Newphew Research Centre, York Science Park, Heslington, York YO10 5DF (GB). **RIDGWAY, Jonathan, Nicholas** [GB/GB]; Smith & Nephew Research Centre, York Science Park, Heslington, York YO10 5DF (GB). **CHEN, Pei-Sheng** [—/GB]; Smith & Nephew Research Centre, York Science Park, Heslington, York YO10 5DF (GB). **PRATT, Michael** [GB/GB]; 6 Bassingham Road, London SW18 3AG (GB). **TANNER, Marc** [GB/GB]; 18 Shearman Road, London SW18 3AG (GB). **LATHAM, Stephen** [GB/GB]; 1125 Carriage Drive, Sun Prairie W1 53590 (GB). **REBACK, Nick** [GB/GB]; Apartment 1, 2040 Winnegago Street, Madison W1 53718 (GB).

(74) Agent: **CONNORS, Martin**; Smith & Nephew Research Centre, York Science Park, Heslington, York YO10 5DF (GB).

(81) Designated States *(unless otherwise indicated, for every kind of national protection available)*: AE, AG, AL, AM, AO, AT, AU, AZ, BA, BB, BG, BH, BR, BW, BY, BZ, CA, CH, CL, CN, CO, CR, CU, CZ, DE, DK, DM, DO, DZ, EC, EE, EG, ES, FI, GB, GD, GE, GH, GM, GT, HN, HR, HU, ID, IL, IN, IS, JP, KE, KG, KM, KN, KP, KR, KZ, LA, LC, LK, LR, LS, LT, LU, LY, MA, MD, ME, MG, MK, MN, MW, MX, MY, MZ, NA, NG, NI, NO, NZ, OM, PE, PG, PH, PL, PT, RO, RS, RU, SC, SD, SE, SG, SK, SL, SM, ST, SV, SY, TJ, TM, TN, TR, TT, TZ, UA, UG, US, UZ, VC, VN, ZA, ZM, ZW.

(84) Designated States *(unless otherwise indicated, for every kind of regional protection available)*: ARIPO (BW, GH, GM, KE, LS, MW, MZ, NA, SD, SL, SZ, TZ, UG, ZM, ZW), Eurasian (AM, AZ, BY, KG, KZ, MD, RU, TJ, TM), European (AT, BE, BG, CH, CY, CZ, DE, DK, EE, ES, FI, FR, GB, GR, HR, HU, IE, IS, IT, LT, LU, LV, MC, MK, MT, NL, NO, PL, PT, RO, SE, SI, SK, SM, TR), OAPI (BF, BJ, CF, CG, CI, CM, GA, GN, GQ, GW, ML, MR, NE, SN, TD, TG).

Published:

— *with international search report (Art. 21(3))*

— *before the expiration of the time limit for amending the claims and to be republished in the event of receipt of amendments (Rule 48.2(h))*

(88) Date of publication of the international search report:
12 August 2010

(54) Title: CONTROLLER FOR AN ACOUSTIC STANDING WAVE GENERATION DEVICE IN ORDER TO PREVENT CLOGGING OF A FILTER

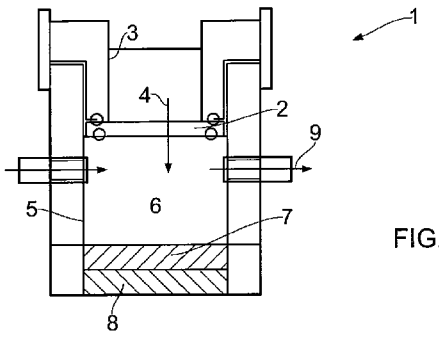

FIG. 1

(57) Abstract: The invention relates to a method and apparatus to continuously monitor and control acoustic energy and vacuum pressure to maintain a net unidirectional flow of multi- phase heterogeneous fluids through a porous filter or membrane. The heterogeneous fluid may come form a variety of sources including biological sources such as, blood, bone marrow aspirate (BMA), adipose tissue (lipoaspirate), urine, saliva, etc.

WO 2010/010355 A3

INTERNATIONAL SEARCH REPORT

International application No
PCT/GB2009/001830

A. CLASSIFICATION OF SUBJECT MATTER
INV. B01L3/00 C12M3/06 B01D29/86

According to International Patent Classification (IPC) or to both national classification and IPC

B. FIELDS SEARCHED

Minimum documentation searched (classification system followed by classification symbols)
B01L C12M B01D

Documentation searched other than minimum documentation to the extent that such documents are included in the fields searched

Electronic data base consulted during the international search (name of data base and, where practical, search terms used)
EPO-Internal

C. DOCUMENTS CONSIDERED TO BE RELEVANT

Category*	Citation of document, with indication, where appropriate, of the relevant passages	Relevant to claim No.
X	GB 2 235 882 A (ESKOFOT AS [DK]) 20 March 1991 (1991-03-20) page 3, line 14 - page 4, line 24; claim 1; figure 1	1
A	US 6 213 311 B1 (CORIC PHILIPPE [FR]) 10 April 2001 (2001-04-10) the whole document	
A	WO 94/21361 A (LEATHERHEAD FOOD RA [GB]; REED ANTONY NIGEL [GB]) 29 September 1994 (1994-09-29) the whole document	
A	DE 201 19 909 U1 (LAUTH WERNER [DE]) 8 August 2002 (2002-08-08) the whole document	

-/--

[X] Further documents are listed in the continuation of Box C. [X] See patent family annex.

* Special categories of cited documents :

"A" document defining the general state of the art which is not considered to be of particular relevance

"E" earlier document but published on or after the international filing date

"L" document which may throw doubts on priority claim(s) or which is cited to establish the publication date of another citation or other special reason (as specified)

"O" document referring to an oral disclosure, use, exhibition or other means

"P" document published prior to the international filing date but later than the priority date claimed

"T" later document published after the international filing date or priority date and not in conflict with the application but cited to understand the principle or theory underlying the invention

"X" document of particular relevance; the claimed invention cannot be considered novel or cannot be considered to involve an inventive step when the document is taken alone

"Y" document of particular relevance; the claimed invention cannot be considered to involve an inventive step when the document is combined with one or more other such documents, such combination being obvious to a person skilled in the art.

"&" document member of the same patent family

Date of the actual completion of the international search	Date of mailing of the international search report
20 November 2009	21/06/2010

Name and mailing address of the ISA/	Authorized officer
European Patent Office, P.B. 5818 Patentlaan 2 NL – 2280 HV Rijswijk Tel. (+31–70) 340–2040, Fax: (+31–70) 340–3016	Roider, Josef

7

Form PCT/ISA/210 (second sheet) (April 2005)

INTERNATIONAL SEARCH REPORT

International application No
PCT/GB2009/001830

C(Continuation). DOCUMENTS CONSIDERED TO BE RELEVANT

Category*	Citation of document, with indication, where appropriate, of the relevant passages	Relevant to claim No.
A	US 6 221 258 B1 (FEKE DONALD L [US] ET AL) 24 April 2001 (2001-04-24) the whole document	
A	GROSCHL MARTIN: "Ultrasonic separation of suspended particles - Part I: Fundamentals" ACUSTICA, S. HIRZEL VERLAG, STUTTGART, DE, vol. 84, no. 3, 1 May 1998 (1998-05-01), pages 432-447, XP009098278 ISSN: 0001-7884 the whole document	

Form PCT/ISA/210 (continuation of second sheet) (April 2005)

INTERNATIONAL SEARCH REPORT

International application No.
PCT/GB2009/001830

Box No. II Observations where certain claims were found unsearchable (Continuation of item 2 of first sheet)

This international search report has not been established in respect of certain claims under Article 17(2)(a) for the following reasons:

1. ☐ Claims Nos.:
because they relate to subject matter not required to be searched by this Authority, namely:

2. ☐ Claims Nos.:
because they relate to parts of the international application that do not comply with the prescribed requirements to such an extent that no meaningful international search can be carried out, specifically:

3. ☐ Claims Nos.:
because they are dependent claims and are not drafted in accordance with the second and third sentences of Rule 6.4(a).

Box No. III Observations where unity of invention is lacking (Continuation of item 3 of first sheet)

This International Searching Authority found multiple inventions in this international application, as follows:

see additional sheet

1. ☐ As all required additional search fees were timely paid by the applicant, this international search report covers all searchable claims.

2. ☐ As all searchable claims could be searched without effort justifying an additional fees, this Authority did not invite payment of additional fees.

3. ☐ As only some of the required additional search fees were timely paid by the applicant, this international search report covers only those claims for which fees were paid, specifically claims Nos.:

4. ☒ No required additional search fees were timely paid by the applicant. Consequently, this international search report is restricted to the invention first mentioned in the claims; it is covered by claims Nos.:

1 - 39

Remark on Protest

☐ The additional search fees were accompanied by the applicant's protest and, where applicable, the payment of a protest fee.

☐ The additional search fees were accompanied by the applicant's protest but the applicable protest fee was not paid within the time limit specified in the invitation.

☐ No protest accompanied the payment of additional search fees.

FURTHER INFORMATION CONTINUED FROM PCT/ISA/ 210

This International Searching Authority found multiple (groups of) inventions in this international application, as follows:

1. claims: 1-39

Group I is directed to a filtration unit having a filter dividing the filtration unit into a pre- and a post-filtration chamber, further having a device for generating an acoustic standing wave and a controller for adjusting the wave according to the weight of fluid measured in the pre-filtration chamber.

---

2. claims: 40-82

Group II is directed to a filtration unit having a filter dividing the filtration unit into a pre- and a post-filtration chamber and having filter tilting means for tilting the filter according to the signal.

INTERNATIONAL SEARCH REPORT

Information on patent family members

International application No
PCT/GB2009/001830

Patent document cited in search report	Publication date	Patent family member(s)	Publication date
GB 2235882 A	20-03-1991	DE 4027907 A1	28-03-1991
		DK 457189 A	16-03-1991
		IT 1249738 B	11-03-1995
		JP 3157108 A	05-07-1991
		NL 9001959 A	02-04-1991
		US 5085772 A	04-02-1992
US 6213311 B1	10-04-2001	EP 0904820 A1	31-03-1999
		FR 2768941 A1	02-04-1999
WO 9421361 A	29-09-1994	NONE	
DE 20119909 U1	08-08-2002	NONE	
US 6221258 B1	24-04-2001	US 2002036173 A1	28-03-2002