Jan. 8, 1957 J. E. WILBURN 2,776,801

APPARATUS FOR COILING FILAMENTARY MATERIALS

Filed Nov. 4, 1954 5 Sheets-Sheet 1

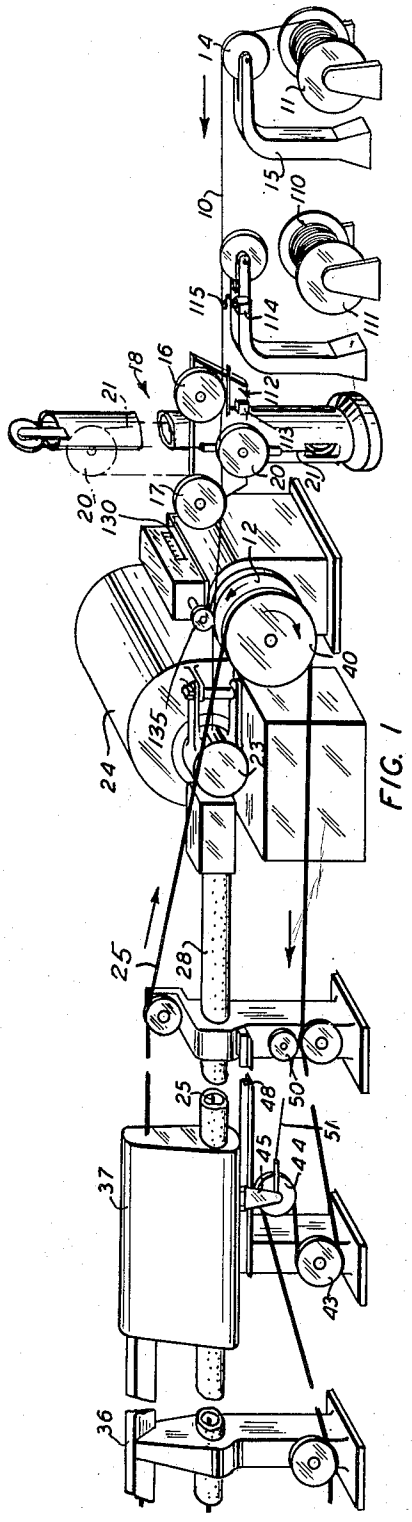

FIG. 1

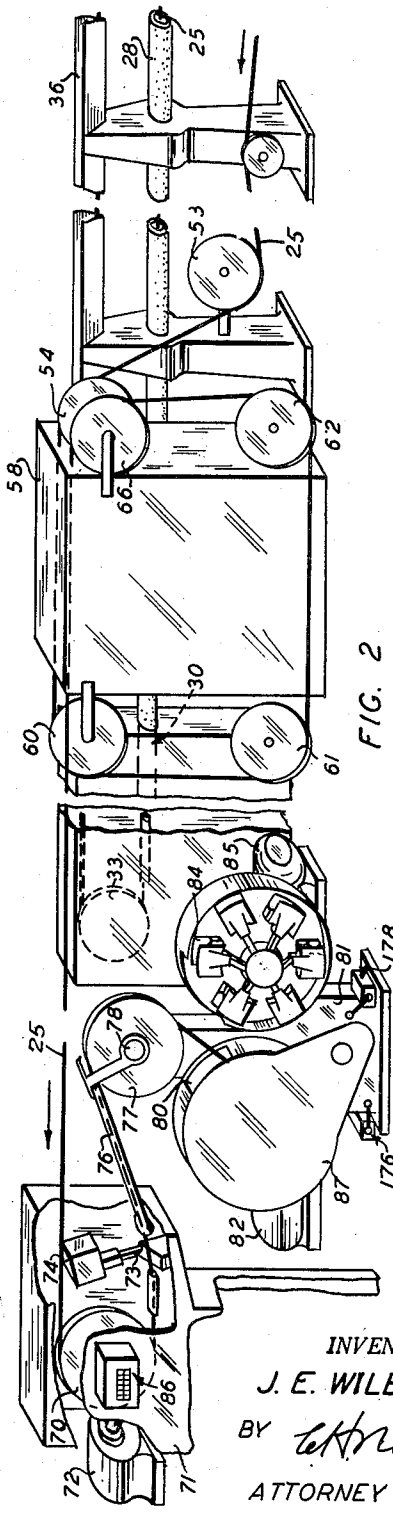

FIG. 2

INVENTOR.
J. E. WILBURN
BY
ATTORNEY

Jan. 8, 1957 J. E. WILBURN 2,776,801

APPARATUS FOR COILING FILAMENTARY MATERIALS

Filed Nov. 4, 1954 5 Sheets-Sheet 2

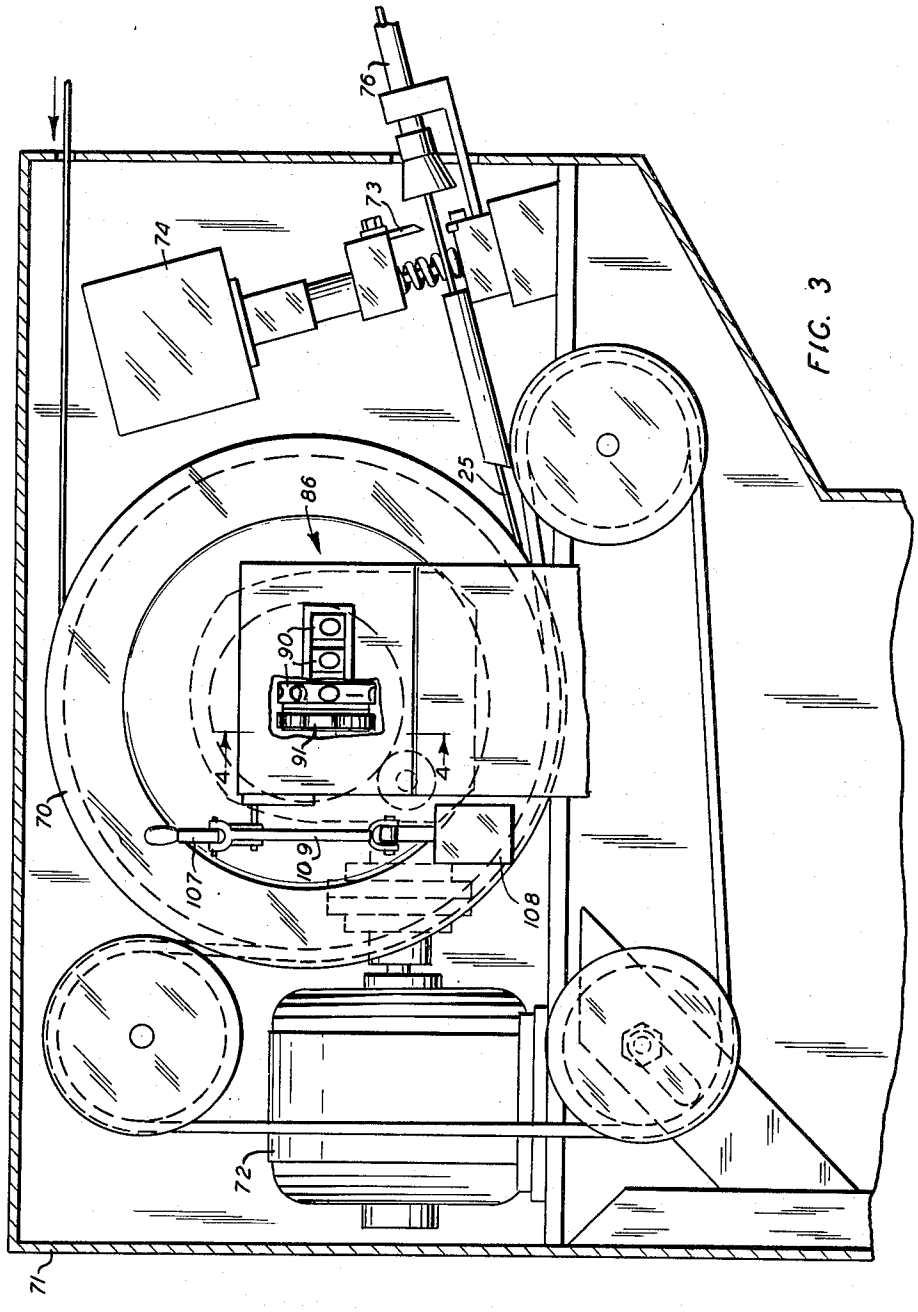

FIG. 3

INVENTOR.
J. E. WILBURN
BY
ATTORNEY

Jan. 8, 1957 J. E. WILBURN 2,776,801

APPARATUS FOR COILING FILAMENTARY MATERIALS

Filed Nov. 4, 1954 5 Sheets-Sheet 3

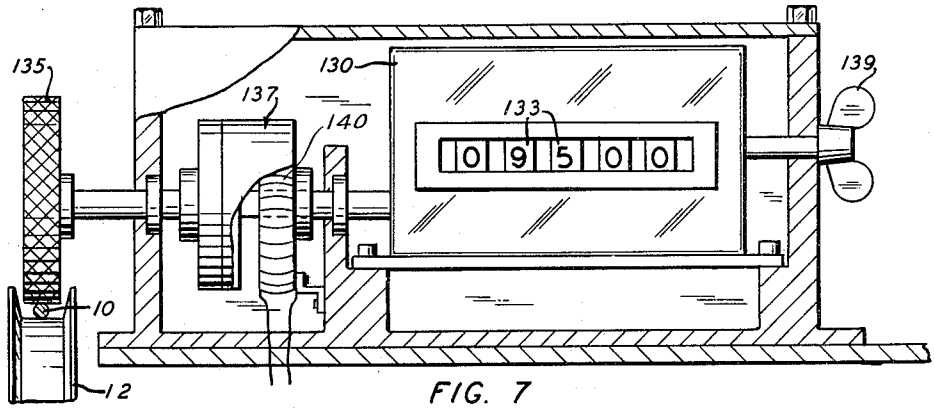

FIG. 7

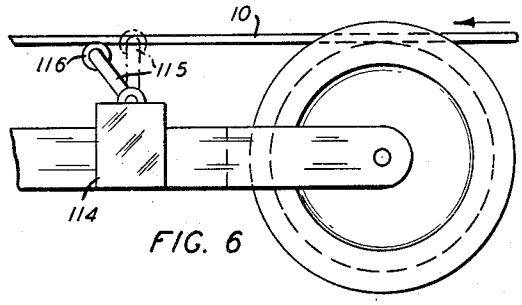

FIG. 6

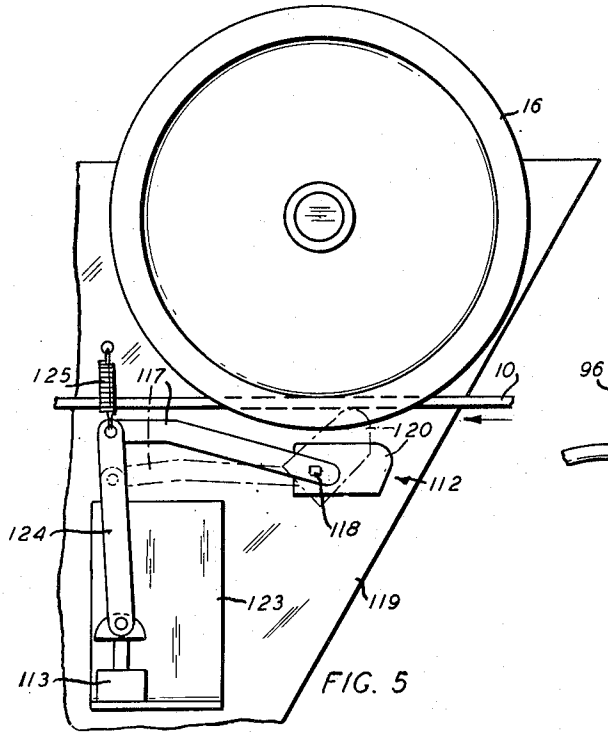

FIG. 5

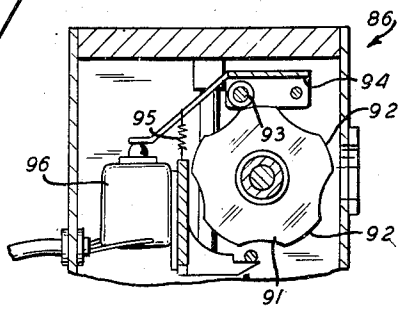

FIG. 4

INVENTOR.
J. E. WILBURN
BY
ATTORNEY

Jan. 8, 1957 J. E. WILBURN 2,776,801

APPARATUS FOR COILING FILAMENTARY MATERIALS

Filed Nov. 4, 1954 5 Sheets-Sheet 4

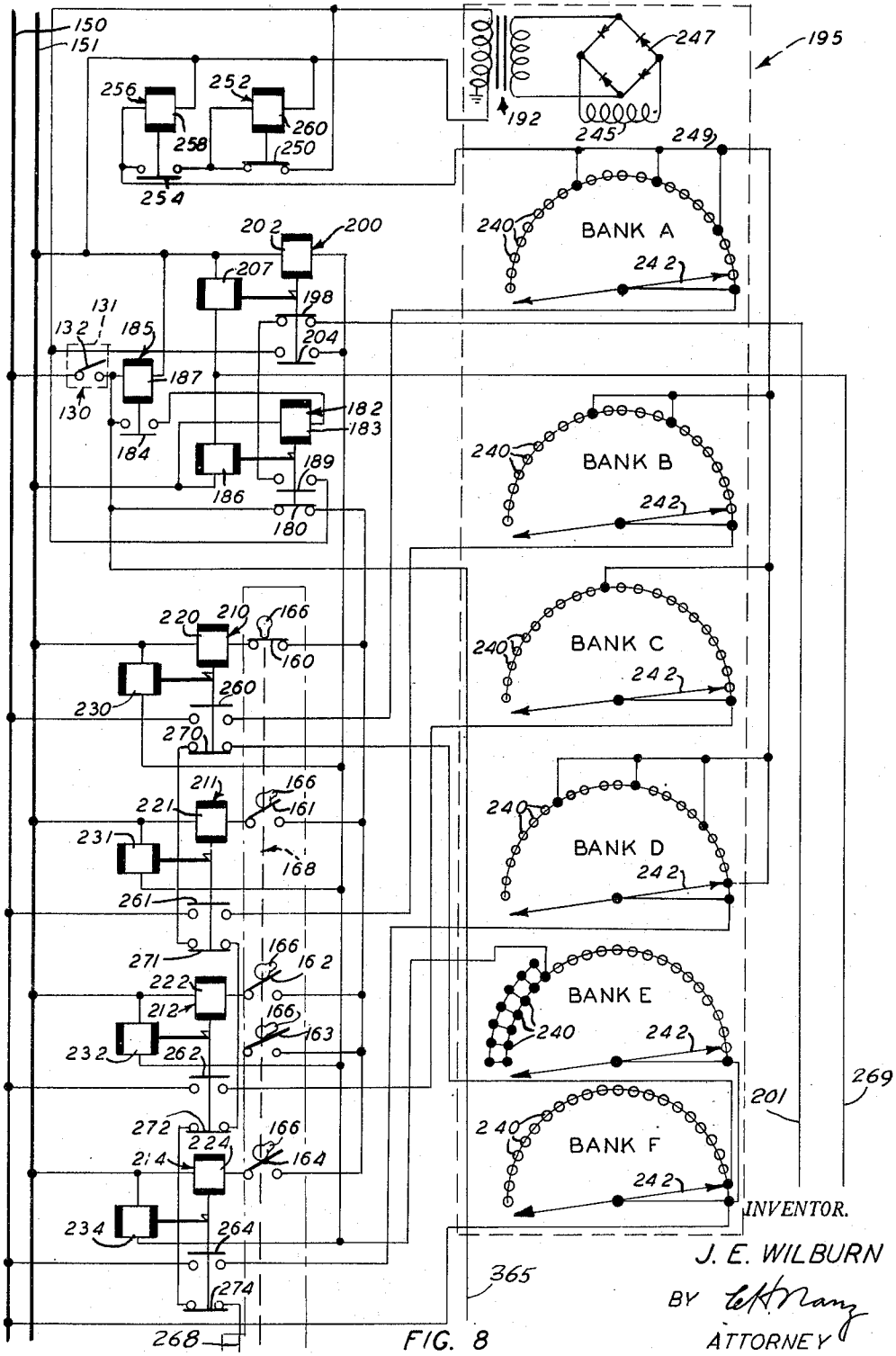

FIG. 8

INVENTOR.
J. E. WILBURN
BY
ATTORNEY

Jan. 8, 1957 J. E. WILBURN 2,776,801

APPARATUS FOR COILING FILAMENTARY MATERIALS

Filed Nov. 4, 1954 5 Sheets-Sheet 5

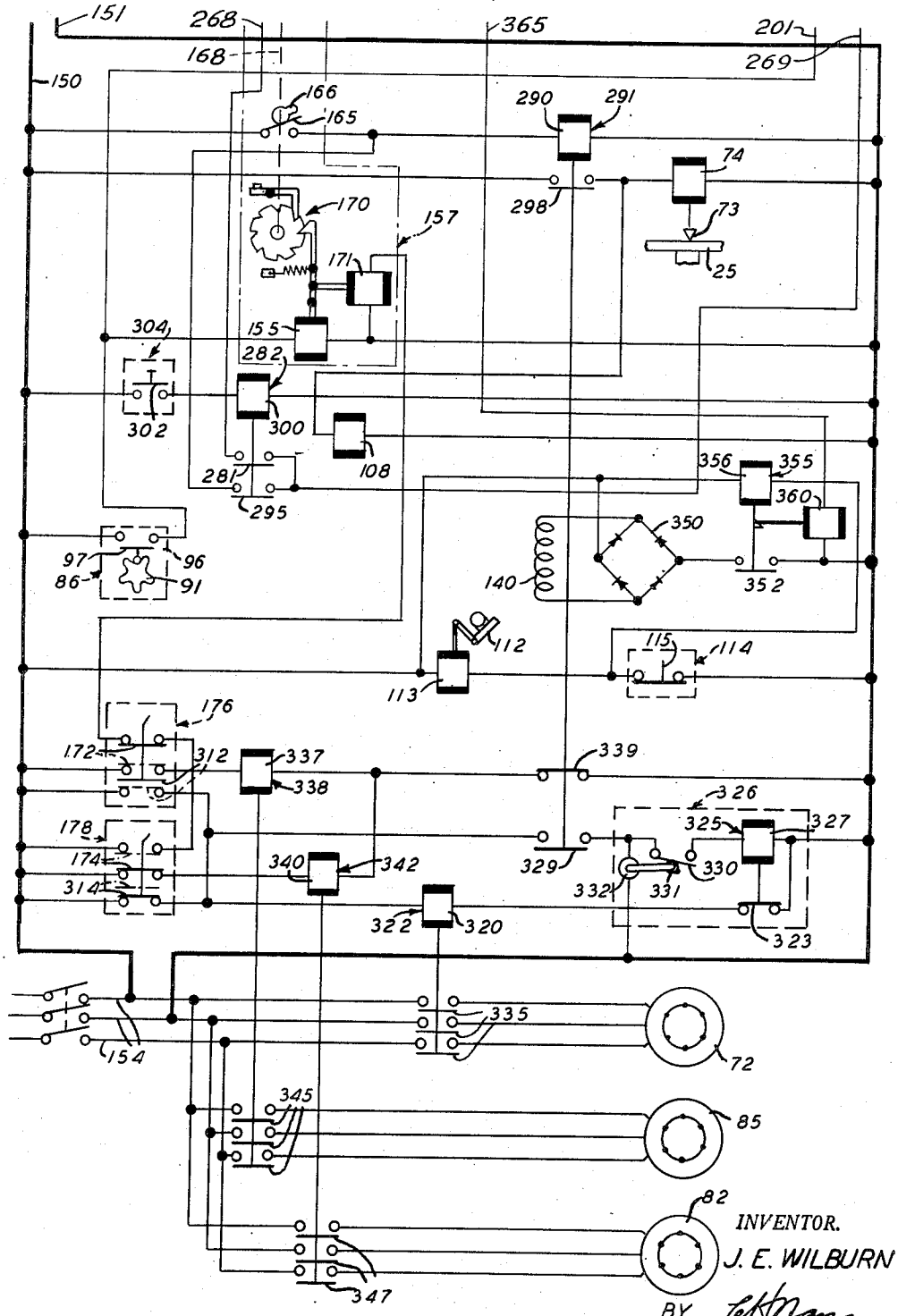

FIG. 9

INVENTOR.
J. E. WILBURN
BY
ATTORNEY

United States Patent Office 2,776,801 Patented Jan. 8, 1957

2,776,801

APPARATUS FOR COILING FILAMENTARY MATERIALS

Julian E. Wilburn, Parkville, Md., assignor to Western Electric Company, Incorporated, New York, N. Y., a corporation of New York

Application November 4, 1954, Serial No. 466,833

7 Claims. (Cl. 242—25)

This invention relates to apparatus for coiling filamentary materials, and more particularly to apparatus for coiling insulated conductors of continuous, indefinite lengths into finished coils of predetermined lengths.

In general, insulated electrical conductors are manufactured by means of a substantially continuous process in which a filamentary metallic core is advanced continuously from a supply thereof through a series of treating apparatus and processes to produce a finished insulated conductor, which is cut into coils of predetermined lengths. To maintain a continuous supply of the metallic core through the apparatus, it is necessary to connect the leading end of another supply of the metallic core to the trailing end of the metallic core then advancing through the apparatus. Such connections are usually not intended to form a continuous length of the finished insulated conductor, and are not intended to be included in the coils. It is desirable, therefore, that the connection be located at the end of a finished coil so that it may be removed without reducing the length of the finished insulated conductor contained therein. Otherwise coils are produced which, after the conductor has been cut to remove the connection, will contain less than a minimum or usable length of the conductor.

An object of this invention is to provide new and improved apparatus for coiling filamentary materials.

Another object of this invention is to provide new and improved apparatus for coiling insulated conductors of continuous, indefinite lengths into finished coils of predetermined lengths.

An apparatus illustrating certain features of the invention may include means for continuously advancing a given length of a filamentary material longitudinally, means for coiling up the advancing filamentary material, means for normally intermittently terminating and reinitiating the operation of the coiling means to form a plurality of coils each containing an identical predetermined length of the material, and means for interrupting the normal coiling sequence when a predetermined amount of the material remains to be coiled. Means are provided for controlling the coiling means thereafter to form a plurality of coils each containing no more than the predetermined length of material and no less than a predetermined lesser length of material.

A complete understanding of the invention may be obtained from the following detailed description of an apparatus embodying the invention, when read in conjunction with the appended drawings, in which:

Fig. 1 is a side elevation of a portion of a continuous extruding and vulcanizing apparatus embodying certain features of the invention, with parts thereof broken away;

Fig. 2 is a side elevation of a portion of the apparatus shown in Fig. 1, and extending to the left of the portion shown in Fig. 1, with parts thereof broken away;

Fig. 3 is an enlarged, fragmentary view of a portion of the left end of the apparatus shown in Fig. 2, with parts thereof broken away;

Fig. 4 is an enlarged, fragmentary, sectional view taken along line 4—4 of Fig. 3;

Fig. 5 is an enlarged, fragmentary elevation of a portion of the apparatus shown in Fig. 1;

Fig. 6 is an enlarged, fragmentary elevation of another portion of the apparatus shown in Fig. 1;

Fig. 7 is an enlarged, fragmentary view of another portion of the apparatus shown in Fig. 1, with parts thereof broken away for clarity, and

Figs. 8 and 9 combined constitute a schematic representation of an electrical control circuit forming part of the apparatus.

In the apparatus shown in Figs. 1 and 2, a filamentary conductive core 10, which may be bare or covered with an insulating covering, is contained upon a supply reel 11 rotatably mounted so that the core may be withdrawn therefrom. The core 10 is withdrawn from the reel 11 by a capstan 12 driven in a counterclockwise direction by suitable driving means (not shown), and passes around a guide pulley 14 positioned directly above the reel 11 on a support 15. The core then passes under rotatable pulleys 16 and 17, mounted on a support mounted at the base of a cutover tower, indicated generally at 18, and over a rotatable pulley 20. The pulley 20 is slidably mounted on the cutover tower by means of an endless belt 21 provided with a suitable counterweight (not shown) designed to ride in the vertical part of the cutover tower 18 and constantly urge the pulley 20 toward the top of the tower. Suitable braking is applied to the reel 11 by braking apparatus (not shown) so that a predetermined tension is exerted on the core 10 as it is withdrawn from the reel by the capstan 12.

The pulley 20 is normally latched in its lowermost position on the cutover tower 18 against the action of the counterweight, but may be positioned at the top of the cutover tower 18 to form a vertical takeup loop in the path of travel of the core 10 by unlatching it from the base of the cutover tower and reducing the braking force applied to the reel 11 until the counterweight overcomes the tension in the core 10 between the reel 11 and the capstan 12.

The core 10 (Fig. 1), after passing around the capstan 12, advances therefrom through an extruding head 23 forming a part of a conventional screw-type extruding apparatus 24, which applies a vulcanizable covering around the advancing core 10 to form an insulated conductor 25. The insulated conductor 25 passes from the extruding head through an elongated tube 28 containing high pressure, high temperature steam for the purpose of vulcanizing the insulating covering as the insulated conductor 25 passes therethrough. The insulated conductor 25 passes from the tube 28 through a cooling tube, indicated generally at 30, which contains water under pressure to cool the vulcanized covering on the advancing insulated conductor 25. The insulated conductor 25, thereafter, passes around a guide sheave 33 which reverses the direction of travel of the conductor, whereby the conductor now is traveling from left to right in Figs. 1 and 2.

The insulated conductor 25 (Fig. 2) now passes along a V-shaped trough 36, which is partially filled with water, to an air wiper 37 (Fig. 1) provided for the purpose of removing the moisture from the insulating covering of the insulated conductor 25. The dry, insulated conductor 25 emerging from the air wiper 37 passes around a capstan 40, which is driven in a clockwise direction by the same power means provided for the capstan 12, and thereafter travels from right to left to a pulley 43 and around the pulley 43 to a pulley 44 rotatably mounted on a bracket 45 adapted to ride on a T-shaped rail 48. The movable pulley 44 is adapted to form a horizontal, expandible loop in the path of travel of the insulated con-

ductor 25 as it travels from the capstan 40 through the remaining portion of the apparatus shown in Fig. 2. A drum 50 is suitably mounted on the apparatus and is provided with a steel cable 51 wound thereon, a portion of which is shown withdrawn therefrom and connected to the bracket 45 carrying the pulley 44. The drum 50 is provided with an internal spring mechanism (not shown), which maintains a constant pull on the bracket 45 and continually urges the bracket 45 and the pulley 44 toward the right-hand end of the track 48.

After passing around the pulley 44 (Fig. 1), the insulated conductor 25 continues moving to the left and passes around a pulley 53 (Fig. 2) and then upwardly and around a pulley 54 which guides the conductor through a spark-testing apparatus of a well-known design similar to that described and claimed in W. D. Boynton et al. Patent 2,488,578, granted November 22, 1949. The spark-testing apparatus is mounted in a housing 58. The insulated conductor 25, upon emerging from the spark-testing electrode passes around the pulley 60, and travels downwardly and around a pulley 61 and then travels to the right to a pulley 62. The insulated conductor 25 passes around the pulley 62 and travels upwardly to a pulley 66 which guides the conductor through another spark-testing electrode (not shown) which is mounted in the housing 58. The insulated conductor 25 travels from the latter electrode to a capstan 70 mounted in a housing 71 and driven by a motor 72. The capstan 70 serves to advance the insulated conductor 25 from the capstan 40 beneath a knife 73 arranged to be actuated by a solenoid 74 and then through a tube 76 which guides the conductor to a pulley 77 rotatably mounted on a traversing shaft 78. The knife 73 and solenoid 74 are described in detail and claimed in D. C. Robson Patent 2,604,942, granted July 29, 1952.

The insulated conductor 25 (Fig. 2) passes around the pulley 77 and then is coiled up by a coiling head 80 rotatably mounted on a stand 81 and driven by a motor 82. When the coiling head 80 is rotated by the motor 82 to take up the insulated conductor 25, the traversing shaft 78 moves the pulley transversely with respect to the rotating axis of the coiling head so as to distribute the conductor evenly on the coiling head. A second coiling head 84 is rotatably mounted on the stand 81 and arranged to be driven by a motor 85. A coil length counter 86 is arranged to be driven by the motor 72 so as to continuously register the footage of the insulated conductor 25 taken up by the coiling heads 80 and 84. The second coiling head 84 is provided for the purpose of maintaining continuous coiling of the insulated conductor 25, wherein, as soon as the coiling head in operation has coiled up a predetermined footage of the insulated conductor 25, the conductor is severed by the knife 73 and the leading end of the insulated conductor 25 emerging from the tube 76 is secured to the empty coiling head. The motor driving the empty coiling head is energized and the coiling head coils up the insulated conductor 25 while the previously wound coil is removed from the coiling head. A cover 87 is pivotally mounted on the stand 81 so that it may be selectively positioned to enclose the operating coiling head, that is the coiling head which is at the time rotating to coil up the insulated conductor 25. Coiling heads and a cover similar to the coiling heads 80 and 84 and the cover 87 are described in greater detail and claimed in E. D. Hanson Patent 2,561,736, granted July 24, 1951.

The coil length counter 86 (Fig. 3) is a conventional length counter having at least units, tens and hundreds wheels 90—90 arranged to be driven by the motor 72 so as to record the footage of the insulated conductor 25 being coiled up by the coiling heads. A cam 91 (Figs. 3 and 4), is secured to the hundreds wheel 90 and provided with five equally spaced lobes 92—92 about its periphery, each of which has an arcuate length sufficient to bridge two digits on the hundreds wheel 90. The cam 91 is secured to the hundreds wheel 90 so that each lobe 92 bridges a successive pair of digits consisting of one even digit and one odd digit, so that digits "0" and "1"; "2" and "3"; "4" and "5," and etc. are bridged thereby. A roller 93 mounted on a pivotally mounted arm 94 is urged to ride on the periphery of the cam 91 by a tension spring 95 secured to the free end of the arm 94 and the counter structure. The free end of the arm 94 is arranged to actuate the operating button of a sensitive switch 96 positioned in the counter 86 to close a contact 97 (Fig. 9) momentarily each time the cam 91 is advanced two digits, that is, each time an even digit is positioned opposite the window of the coil length counter 86.

The coil length counter 86 is provided with the usual mechanism for resetting the wheels 90—90 to their normal starting position, the reset mechanism being arranged to be actuated by the movement of a lever 107 mounted pivotally on the counter housing. The lever 107 is operatively connected to the armature of a solenoid 108 by means of a connecting link 109. When the solenoid 108 is energized, the lever 107 is operated to reset the wheels 90—90 of the coil length counter 86 to their "zero" positions.

A second supply reel 111 (Fig. 1), containing a length of core 110 similar to the core 10, is similarly mounted on a rotatable support so that the core 110 may be withdrawn therefrom and advanced through the extruding and vulcanizing apparatus to the coiling heads 80 and 84 in the manner described for the core 10. When substantially all of the core 10 is withdrawn from the reel 11, the trailing end of the core 10 from the exhausted reel 11 must be stopped temporarily so that it can be connected to the leading end of the core 110 wound on the reel 111 in order that the capstans 12 and 40, the extruding apparatus, the vulcanizing apparatus and the coiling heads 80 and 84 remain in continuous operation. The ends of the cores are connected or spliced to each other by a suitable "hook and eye" type of connector in which the respective portions of the connector are connected to the ends of their respective cores when it is wound on the reels 11 and 111.

A clamp, indicated generally at 112 (Figs. 1 and 5), is mounted on the cutover tower 18 under the pulley 16 to clamp the trailing end of the core 10 tightly in the groove of the pulley 16 to stop further advancement thereof so that the ends of the cores 10 and 110 from the two supply reels 11 and 111 may be connected together. The clamp 112 is arranged to be actuated by a solenoid 113, the energization of which is controlled by a runout switch 114 (Fig. 6). The runout switch 114 is provided with a pivoted, spring-biased operating lever 115. Mounted on the free end of the operating lever 115 is a transversely extending elongated roller 116. When a core, such as the cores 10 or 110, is being withdrawn from the reels 11 or 111, it engages the roller 116 and holds the operating lever in its pivoted, actuated position. However, when the end of the core leaves its supply reel, the tension in the end of the core is lost and the operating lever 115 is released to its normal or vertical position as shown in broken lines in Fig. 6. The clamping apparatus and the runout switch 114 shown in Figs. 1, 5 and 6 are schematic representations of similar apparatus described in detail and claimed in J. B. Gray III et al. Patent 2,650,772, granted September 1, 1953.

The clamp 112 (Fig. 5) provided on the cutover tower 18, consists of an arm 117 secured to a shaft 118 rotatably mounted in a suitable manner on a support 119 carrying the pulleys 16 and 17. A shoe 120 is secured on the shaft 118 so that when the arm 117 is actuated to its broken line position, as seen in Fig. 5, the right end of the shoe engages the core 10 and clamps it tightly against the bottom of the groove of the pulley 16. The solenoid 113 is mounted on a bracket 123 secured to the support 119 and its plunger is connected to the end of the arm 117 by a connecting link 124. A spring 125 is positioned between a point on the pulley support of the cutover tower

and the end of the arm 117 so as to hold the arm in its full line position, as shown in Fig. 5.

A runout control counter 130 (Figs. 1 and 7) is positioned adjacent to the capstan 12 and is designed to register the footage of the core 10 or the core 110 advancing around the capstan from either the supply reel 11 or the supply reel 111, depending upon from which of these reels the core is being withdrawn at the time. The runout control counter 130 is a commercially obtainable counter which has been modified slightly so that it will subtract rather than add. A suitable counter is one manufactured by Durant Manufacturing Company, Milwaukee, Wisconsin, which is designated S–R–7–1–L and is described in their Catalog Section No. 45 Issue A. This counter is capable of registering lengths that are greater than the maximum length of core wound on a full supply reel. The runout control counter 130 is designed to actuate a sensitive switch 131 to close its associated contact 132 (Fig. 8) when counting wheels 133—133 reach a predetermined number.

The runout control counter 130 is driven by a measuring wheel 135 (Figs. 1 and 7), which rollingly engages the core 10 or 110 as it advances over the capstain 12. The measuring wheel 135 is operatively connected to drive the counting wheels 133—133 through a magnetically actuated clutch 137 (Fig. 7), and is geared so as to cause the counting wheels to subtract from the initial setting thereof. The clutch 137 is operated by a magnetizing coil 140, which when energized engages the clutch to permit the measuring wheel 135 to drive the counting wheels 133—133.

In operation, the counting wheels 133—133 of the counter 130 are preset manually to indicate initially the total length of the core 10 or 110 contained at the start on either the full supply reel 11 or 111. Subsequently, as the core leaves the supply reel, the footage of the core advancing past the runout control counter 130 is subtracted from the indication thereon. The runout control counter 130 is adjusted so that when the counting wheels 133—133 register "2,280," that is when the length of the core remaining on the then active supply reel 11 or 110 is 2,280 feet, the switch 131 is actuated to close the contact 132. Once the contact 132 closes, it remains closed until the operator turns a key 139 manually to reset the counter for the next run. Since the length of the path of travel of the core 10 or 110 between either the supply reel 11 or the supply reel 111 and the coiling heads 80 or 84 is approximately 920 feet, the total length of the insulated conductor 25 remaining to be coiled into coils upon the coiling heads at the instant the contact 132 closes is approximately 2,280 feet plus 920 feet or 3,200 feet.

The electrical control circuit shown in Figs. 8 and 9 controls the coiling apparatus automatically so that normally the coiling heads 80 and 84 coil up the insulated conductor 25 successively into coils each containing 1,000 feet. However, when the supply of the core 10 on the then active supply reel is nearly exhausted, the control circuit automatically sets up a predetermined sequence of coiling and cutting steps to divide the remaining length into coils each of which is not less than 800 feet and not more than 1,000 feet in length.

The electrical circuit shown schematically in Figs. 8 and 9 comprises a pair of busses 150 and 151 which supply a single phase A. C. voltage to the entire control apparatus. The busses 150 and 151 are connected to two of three lines 154—154, which are in turn connected to a three phase A. C. supply. Connected across the busses 150 and 151 in series with the switch 96 is a solenoid 155 of a conventional sequential stepping relay, indicated generally at 157. The stepping relay 157 includes six contacts 160 to 165, inclusive, operated sequentially by associated cams 166—166 mounted on a cam shaft 168. The cam shaft 168 is indexed rotatably step-by-step by means of a pawl and ratchet escapement device shown schematically at 170. Each time the solenoid 155 is energized and de-energized by an electrical pulse the pawl and ratchet device 170 is operated to index the cam shaft 168 one step.

The stepping relay 157 is designed so that normally all of the contacts 160 to 165, inclusive, are open except the contact 160 which is normally closed. When a first electrical impulse momentarily energizes the solenoid 155, the contact 160 opens and the contact 161 closes. A second electrical impulse through the solenoid 155 will cause the contact 161 to open and the contact 162 to close. A third electrical impulse through the solenoid 155 will cause the contact 162 to open and the contact 163 to close. A fourth impulse similarly opens the contact 163 and closes the contact 164. A fifth electrical impulse through the solenoid 155 opens the contact 164 and closes both the contact 165 and the contact 160. The stepping relay 157 may be reset at any stage by energizing a reset coil 171, which is connected across the busses 150 and 151 through a series arrangement of contacts 172 and 174 of limit switches 176 and 178, respectively (Fig. 9).

The limit switches 176 and 178 are mounted on the stand 81 supporting the coiling heads 80 and 84 so as to be actuated by the pivotally mounted cover 87. When the cover 87 encloses the coiling head 80, the contacts of the switches 176 and 178 assume their full line positions, and when the cover 87 encloses the coiling head 84, the contacts of the switches assume their broken line positions. When the cover 87 is at any intermediate position, that is when it is not enclosing either the coiling head 80 or the coiling head 84, the reset coil 171 is energized to reset the stepping relay 157 to its normal position in which only the contact 160 is closed.

Each of the contacts 160 to 164, inclusive, of the stepping relay 157 is connected to the bus 150 through a normally closed contact 180 of a solenoid operated relay 182 and the normally open contact 132 of the switch 131 in the runout control counter 130. The relay 182 is provided with an operating coil 183, which is connected across the busses 150 and 151 through a normally open contact 184 of a solenoid-operated relay 185 and the normally open contact 132 of the switch 131 in the runout control counter 130.

The relay 182 is provided with a spring loaded mechanism for latching the contacts thereof in the positions they assume when the coil 183 is energized, and with a reset coil 186 for actuating the latching mechanism to release the contacts to their normal positions. The relay 185 is provided with an operating coil 187 connected across the busses 150 and 151 through the normally open contact 132 of the switch 131 in the runout control counter 130.

When a normally open contact 189 of the relay 182 is closed, it connects the ungrounded side of the primary winding of a step-down transformer 192 of a conventional step selector, indicated generally at 195, to the bus 150 through a series arrangement of a normally closed contact 198 of a solenoid-operated relay 200, a lead 201 and the normally open contact 97 of the switch 96 associated with the coil length counter 86. The relay 200 is provided with an operating coil 202, a normally open contact 204 and a spring loaded mechanism for latching the contacts 198 and 204 in the positions they assume when the operating coil 202 is energized. A reset coil 207, when energized, actuates the latching mechanism to release the contacts 198 and 204 to their normal positions.

A plurality of solenoid-operated relays 210, 211, 212 and 214 are provided with operating coils 220, 221, 222 and 224, respectively, arranged to be energized by the busses 150 and 151 through the contacts 160, 161, 162 and 164, respectively, of the relay 157 through the serially arranged, normally closed contact 180 of the relay 182 and the normally open contact 132 of the switch 131 associated with the runout control counter 130. Each of the relays 210, 211, 212 and 214 is provided with a spring loaded mechanism for latching its associated contacts in the positions they assume when the operating coil of the

associated relay is energized. The relays 210, 211, 212 and 214 are provided additionally with reset coils 230, 231, 232 and 234, respectively. When any one of the coils 230, 231, 232 and 234 is energized, it actuates the latching mechanism of its associated relay to release its respective contacts to their normal positions.

The step selector 195 is provided with six banks designated A, B, C, D, E, and F, respectively, each bank having twenty-three terminals 240—240. Each bank of the step selector 195 is provided with a brush contactor arm 242. The brush contactor arms 242—242 are mounted on a common shaft (not shown) which indexes the brush contactor arms in unison, step-by-step from one terminal 240 to the next terminal 240 whenever a momentary electrical impulse energizes and de-energizes an associated stepper coil 245. The stepper coil 245 is connected through a full wave, bridge rectifier 247 to the secondary winding of the transformer 192.

Referring again to Fig. 8, it may be seen that the fifth, the tenth and the fifteenth terminals of the terminals 240—240 of bank "A" of the step selector 195, the ninth and the fourteenth terminals of the terminals 240—240 of bank "B," the thirteenth terminal of the terminals 240—240 of bank "C" and the second, sixth, eleventh and sixteenth terminals of the terminals 240—240 of bank "D" are connected commonly to a line 249. The line 249 is connected to the ungrounded side of the primary winding of the transformer 192 through a normally closed contact 250 of a solenoid-operated, time delay relay 252 and a normally open contact 254 of a solenoid-operated, time delay relay 256. The relay 256 is provided with an operating coil 258 connected across the bus 151 and the line 249. The relay 252 is provided with an operating coil 260 connected between the bus 151 and a point intermediate of the serially arranged contacts 250 and 254.

The first terminals of the terminals 240—240 of banks "A," "B," "C" and "D," respectively, of the step selector 195 are connected to the bus 150 in series with normally open contacts 260, 261, 262 and 264, respectively, of the relays 210, 211, 212 and 214, respectively. The first terminal of the terminals 240—240 of each of banks "E" and "F" of the step selector 195 are connected directly to the bus 150. The seventeenth to twenty-third terminals, inclusive, of the terminals 240—240 of bank "E" of the step selector 195 are connected commonly and in series with the normally open contact 204 of the relay 200 of the ungrounded side of the primary winding of the transformer 192. The operating coil of the relay 200 is connected at one side to the bus 151 and at the other to the commonly connected seventeenth to twenty-third terminals, inclusive, of the terminals 240—240 of bank "E" of the step selector 195. Reset coils 230, 231, 232 and 234 of the relays 210, 211, 212 and 214, respectively, are each connected in parallel with the operating coil 202 of the relay 200.

The second terminal of the terminals 240—240 of bank "F" of the step selector 195 is connected by leads 268 and 269 to the bus 151 in series with normally closed contacts 270, 271, 272 and 274 of relays 210, 211, 212 and 214, respectively, a normally open contact 281 of a solenoid-operated relay 282 and a parallel arrangement of the reset coils 186 and 207. The reset coils 186 and 207 are connected in parallel with the operating coil 290 of a relay 291 when a normally open contact 295 of the relay 282 is closed. The operating coil 290 of the relay 291 is connected across the busses 150 and 151 in series with the normally open contact 165 of the stepping relay 157. A normally open contact 298 of the relay 291, when closed, connects the solenoid 74 across the busses 150 and 151 to actuate the knife 73 to sever the insulated conductor 25. The solenoid 108 is connected in parallel with the solenoid 74 and is energized each time the contact 298 closes. An operating coil 300 of the relay 282 is connected across the busses 150 and 151 in series with a normally open contact 302 of a manually operated push button switch 304. The solenoid 113 is connected across the busses 150 and 151 in series with the switch 114.

The limit switches 176 and 178 are provided additionally with contacts 312 and 314, respectively, which are arranged so that when the cover 87 encloses the coiling head 80, the contact 312 is open and the contact 314 is closed. The contacts 312 and 314 are connected in parallel with each other, and are connected in series with an operating coil 320 of a solenoid-operated relay 322 and a normally closed contact 323 of a solenoid-operated relay 325 included in a motor-driven timer, indicated generally at 326. An operating coil 327 of the relay 325 is connected in series with a normally open contact 329 of the relay 291 and a normally open switch 330 arranged to be actuated by a cam 331 driven by a timer motor 332 included in the timer 326. The series arrangement consisting of the operating coil 327, the contact 329 and the switch 330 is connected in parallel with the operating coil 320 of the relay 322 and the normally closed contact 323. The relay 322 is provided with normally open contacts 335—335, which are arranged to connect the motor 72 to the three-phase supply lines 154—154.

When the cover 87 encloses the coiling head 84, the contact 172 assumes the broken line position shown in Fig. 9. In this position, the contact 172 connects an operating coil 337 of a solenoid-operated relay 338 across the busses 150 and 151 through a normally closed contact 339 of the relay 291. Similarly, when the cover 87 encloses the coiling head 80, the contact 174 connects an operating coil 340 of a solenoid-operated relay 342 across the busses 150 and 151 through the normally closed contact 339 of the relay 291. The relay 338 is provided with three normally open contacts 345—345 which, when closed, connect the motor 85 to the three-phase supply lines 154—154. The relay 342 is provided with three normally open contacts 347—347 which, when closed, connect the motor 82 to the supply lines 154—154.

The magnetizing coil 140 (Fig. 9), which operates the clutch 137 (Fig. 7) to connect the measuring wheel 135 to the runout control counter 130, is connected to the output terminals of a bridge type rectifier 350. The rectifier 350 is energized by the busses 150 and 151 through a contact 352 of a solenoid-operated relay 355. An operating coil 356 of the relay 355 is connected across the busses 150 and 151 in series with the runout switch 114. The relay 355 is provided with a conventional latching mechanism, which locks the contact 352 in its closed position after the relay is actuated. The latching mechanism is provided with a reset coil 360, which is connected across the busses 150 and 151 through a lead 365 and the normally open contact 132 of the switch 131 associated with the counter 130. When the reset coil 360 is energized by the closure of the contact 131, the latching mechanism is disengaged to allow the contact 352 to reopen and thereby disengage the clutch 137.

Operation

It will be assumed that the apparatus is already in continuous operation and that the core 10 is being withdrawn presently from the supply reel 11, which initially contained 9,500 feet of the core when it was full. Before the leading end of the 9,500 feet of the core 10 on the reel 11 was started through the apparatus, the operator preset the runout control counter 130 to register "9,500." As the core 10 advances around the capstan 12, the measuring wheel 135 is rotated by the core to operate the runout control counter 130 to which it is operatively connected through the magnetically actuated clutch 137. During normal operation of the apparatus, the magnetizing coil 140 is energized through the contact 352, which is latched in the closed position by the latching mechanism associated with the relay 355.

It will be assumed further that presently there are more than 2,280 feet of the core 10 remaining on the reel 11,

that the insulated conductor 25 has just been severed adjacent to the coiling head 84 and that the end of the insulated conductor 25 is ready to be secured to the coiling head 80. At this time the cover 87 is positioned so as to enclose the coiling head 84, which has just completed coiling a coil of the insulated conductor 25, 1,000 feet in length. When the operator has the leading end of the insulated conductor 25 secured properly to the coiling head 80, he moves the cover 87 manually to the position shown in Fig. 2 so that it encloses the coiling head 80, whereupon the limit switches 176 and 178 are actuated to the positions indicated by the solid lines in Fig. 9. As the cover 87 moves through its intermediate position before it encloses the coiling head 80, the contacts 172 and 174 of the limit switches 176 and 178, respectively, are both closed momentarily to complete the circuit including the reset coil 171, whereupon the reset coil is energized to reset the contacts 160 to 165, inclusive, of the stepping relay 157 to their normal positions wherein only the contact 160 is closed.

When the cover 87 finally encloses the coiling head 80, the limit switch 178 is actuated and the contact 314 closes to energize the operating coil 320 of the relay 322, which closes the contacts 335—335 to energize the motor 72. The closure of the contact 174 of the limit switch 178, which is in series with the operating coil 340 of the relay 342, energizes the coil 340 to close the contacts 347—347 to energize the motor 82. Thus, the movement of the cover 87 to enclose the coiling head 80 causes simultaneous energization of the motors 72 and 82, whereupon the capstan 70 advances the insulated conductor 25 from the capstan 40 and the coiling head 80 coils up the conductor. The tension created on the insulated conductor 25 by the simultaneous operation of the capstan 70 and the coiling head 80 is sufficient to overcome the spring mechanism provided in the drum 50, and the pulley 44 mounted on the sliding bracket 45 is drawn to its extreme left-hand position on the track 48.

When the motor 72 is energized to drive the take-up capstan 70, the coil length counter 86 is driven by the advancing insulated conductor 25 to register the footage of the conductor being coiled upon the coiling head 80. At the start of the coiling operation of the coiling head 80, the counting wheels 90—90 of the coil length counter 86 are positioned so that the zero digit of each counting wheel is positioned directly opposite the window of the counter, in which case the cam 91 is positioned as shown in Fig. 4. As the coiling head 80 continues to coil up the insulated conductor 25, the cam 91 advances with the hundreds wheel 90. Each time a 200 foot length of the insulated conductor 25 is coiled up, the cam 91 actuates the sensitive switch 96 to close the normally open contact 97 momentarily.

When the contact 97 closes momentarily after the first 200 feet have been coiled on the coiling head 80, the solenoid 155 of the relay 157 is energized by an electrical impulse which indexes the cam shaft 168 to open the contact 160 and close the contact 161. The closing of the contact 161 has no effect on the circuit at this time since the contact 132 is open. The coiling operation continues and, after 400 feet of the insulated conductor 25 have been coiled upon the coiling head 80, another electrical impulse caused by the momentary closing of the contact 97 by the cam 91 energizes the solenoid 155 whereby the contact 161 opens and the contact 162 closes. When 600 feet of the insulated conductor 25 have been coiled up, the cam 91 again actuates the contact 97 to energize the solenoid 155 momentarily and thereby open the contact 162 and close the contact 163. When 800 feet of the insulated conductor 25 have been coiled up, the cam 91 closes the contact 97 a third time, whereupon the contact 163 opens and the contact 164 closes. Finally, when 1,000 feet of the insulated conductor 25 have been coiled upon the coiling head 80, the cam 91 closes the contact 97 again and energizes the solenoid 155 to open the contact 164 and close the contacts 160 and 165.

With the closure of the contact 165, the operating coil 290 of the relay 291 is energized to close its associated contact 298, thereby connecting the solenoid 74 across the busses 150 and 151, whereupon the knife 73 is actuated to sever the conductor. When the relay 291 is energized, it also closes the contact 329 and opens the contact 339. When the contact 339 opens it de-energizes the coil 340 of the relay 342, whereupon the contacts 347—347 open to disconnect the motor 82 from the supply lines 154—154 and the coiling head 80 comes to a stop.

Although at this time the insulated conductor 25 has been severed by the knife 73 and the motor 82 has been disconnected from the supply lines 154—154, the capstan 70 driven by the motor 71 continues to advance the insulated conductor, but at a decreased linear speed relative to that of the conductor leaving the capstan 40. The difference between the linear speeds of the insulated conductor 25 at the capstan 40 and at the capstan 70 is taken up by the pulley 44, which moves to the right due to the tension exerted thereon by the spring-biased drum 50 and thereby expands the loop in the path of travel of the conductor. The capstan 70 continues to advance the insulated conductor 25 through the tube 76 so that the leading end of the severed insulated conductor may be secured to the empty coiling head 84.

While the energization of the coil 290 of the relay 291 serves to de-energize the motor 82 to bring the coiling head 80 to a stop, the de-energization of the motor 72 driving the capstan 70 is delayed for a predetermined period of time by virtue of the fact that the motor 332 of the timer 326 is not energized until the closure of the contact 329 of the relay 291. The timer motor 332 turns the cam 331 until it closes the normally open contact 330 and thereby connects the coil 327 of the relay 325 across the busses 150 and 151. Energization of the coil 327 of the relay 325 opens the normally closed contact 323, which disconnects the coil 320 of the relay 322 from the busses 150 and 151, whereupon the contacts 335—335 drop open and disconnect the motor 72 from the supply lines 154—154.

The timer 326 is adjusted to delay the de-energization of the motor 72 with respect to the de-energization of the motor 82 to permit the capstan 70 to advance a sufficient length of the insulated conductor 25 through the tube 76 after the conductor has been severed by the knife 73 to permit the leading end of the insulated conductor 25 to be secured to the empty coiling head 84. When the timer 326 completes its predetermined timing cycle, the motor 72 is de-energized, whereupon movement of the insulated conductor 25 at the coiling head is terminated temporarily. During the period of time that the insulated conductor 25 is not being coiled up, the spring mechanism of the drum 50 pulls the pulley 44 to the right, as viewed in Fig. 1, and forms a reverse loop in the path of travel of the conductor between the capstan 40 and the capstan 70.

When the operator has secured the end of the severed insulated conductor 25 to the empty coiling head 84, he moves the cover 87 from the position in which it encloses the coiling head 80 to the opposite position in which it encloses the coiling head 84. As the cover 87 passes through its midposition between the coiling heads 80 and 84, it actuates the contact 174 of the limit switch 178 to complete a circuit through the contact 172 of the limit switch 176 thereby energizing the reset coil 171 by connecting it across the busses 150 and 151. The energization of the reset coil 171 resets the stepping relay 157 to its normal condition in which the contact 160 is closed and the contacts 161 to 165, inclusive, are open.

When the cover 87 is positioned directly over the coiling head 84, the contacts 172 and 312, and 174 and 314 of the limit switches 176 and 178, respectively, as-

sume their broken line positions shown in Fig. 9. In these positions the operating coil 337 of the relay 338 is energized through the contact 339 of the relay 291, which is now in its normally closed position as a result of the de-energization of the operating coil 290 of the relay 291 when the stepping relay 157 was reset to open the contact 165. Energization of the operating coil 337 of the relay 338 causes the contacts 345—345 to close thereby energizing the motor 85 to drive the empty coiling head 84.

When the contact 312 of the limit switch 176 closes, it energizes simultaneously the operating coil 320 of the relay 322 through the now closed contact of the relay 325 of the timer 326. The operating coil 327 is de-energized when the contact 329 of the relay 291 is re-opened. Upon energization of the operating coil 320 of the relay 322, the contacts 335 close to re-energize the motor 72 which drives the capstan 70. Thus, the coiling head 84 operates and continues the coiling operation in the same manner as described in connection with the operation of the coiling head 80. The coil of the insulated conductor 25 produced during the previous coiling operation is removed by the operator from the coiling head 80 during the interim in which the coiling head 84 is operating. When another 1,000 feet of the insulated conductor 25 have been wound upon the coiling head 84, the insulated conductor 25 is again severed automatically by the knife 73 and the leading end of the conductor is attached to the coiling head 80, which is now empty.

The cover 87 is then moved manually by the operator to enclose the coiling head 80, the motor 82 is energized and the coiling head 80 operates again to coil up the insulated conductor 25 in the manner described previously. The coiling heads 80 and 84 continue to alternately coil up the insulated conductor 25 into coils 1,000 feet in length until the runout control counter 130 indicates that there are only 2,280 feet of the core 10 remaining on the then active supply reel 11. At this point the contact 132 of the switch 131 associated with the runout control counter 130 closes, thereby energizing the operating coil 187 of the relay 185 to close the contact 184 to energize the operating coil 183 of the relay 182. When the operating coil 183 of the relay 182 is energized it closes the contact 189 and opens the contact 180.

Simultaneously, the closure of the contact 132 of the switch 131 energizes the reset coil 360, which releases the latching mechanism associated with the relay 355, thereby permitting the contact 352 to open. When the contact 352 opens, it de-energizes the magnetizing coil 140, thereby disengaging the clutch 137 so that the measuring wheel 135 no longer drives the runout control counter 130. Since it has been assumed that the full supply reel 11 contained initially 9,500 feet of the core 10, the contact 132 of the switch 131 in the runout control counter 130 closes during the coiling at a time when there are 300 feet of the insulated conductor 25 coiled upon the coiling head 80. Six coils of the insulated conductor 25 each containing 1,000 feet of the insulated conductor, will have already been formed from the 9,500 feet of the core 10 originally on the reel 11.

Due to the fact that there are 300 feet of the insulated conductor 25 on the coiling head at the instant the contact 132 of the switch 131 closes, the contact 161 of the stepping relay 157 will be closed at that time and the remaining contacts 160 and 162 to 165, inclusive, open. Thus, simultaneously with the closing of the contact 132, the operating coil 221 of the relay 211 is energized and latched in an operative position by its associated latching mechanism with its contact 261 closed and its contact 271 open. The relay 182, which is similarly provided with an associated latching mechanism, is latched in its operative position with the contact 189 closed and the contact 180 open. Subsequently, when the contact 132 reopens the relays 182 and 211 are not affected.

The operation of the coiling head 80 continues at this time without interruption, and when there are 400 feet of the insulated conductor 25 on the coiling head the cam 91 of the coil length counter 86 closes the contact 97 to energize the solenoid 155 of the stepping relay 157, thereby opening the contact 161 and closing the contact 162. Since by this time the contacts 180 and 132 are open, the operating coil of the relay 212 remains de-energized when the contact 162 closes. Simultaneously with the closure of the contact 97 and the energization of the solenoid 155 of the stepping relay 157, the stepper coil 245 is energized momentarily by an electrical impulse through the secondary winding of the transformer 192, which is momentarily connected across the busses 150 and 151 by the closure of the contact 97.

This electrical impulse energizes the stepper coil 245 momentarily to index the brush contactor arms 242—242 simultaneously. After the indexing operation, the contactor arms 242—242 are positioned so as to contact the third of the terminals 240—240 of each of the banks A to F, inclusive. Similarly, when the coil length counter 86 indicates that there are 600 feet on the coiling head 80, the contact 163 closes and the contact 162 opens. Simultaneously, the stepper coil 245 is energized momentarily to index the contactor arms 242—242 simultaneously to positions in which they contact the fourth terminal of each of banks "A" to "F," inclusive.

The coiling operation continues in this manner until the coil length counter 86 indicates that there are 1,000 feet of the insulated conductor 25 on the coiling head 80. At this time the contact 97 closes and again energizes the solenoid 155 of the stepping relay 157, thereby opening the contact 164 and closing the contacts 160 and 165. The closure of the contact 97 also energizes the stepper coil 245 momentarily to index the contactor arms 242—242 to positions wherein they engage the sixth terminal of the terminals 240—240 of each of the banks "A" to "F," inclusive.

When the contact 165 closes, the solenoid 74 is energized again to operate the knife 73 to sever the insulated conductor 25. The operation of the coiling head 80 then ceases with a 1,000 foot coil of the insulated conductor 25 on the coiling head. The operator then connects the leading end of the insulated conductor 25 to the coiling head 84, and reinitiates the coiling operation by moving the cover 87 to the position in which it encloses the coiling head 84. The movement of the cover 87 to the latter position resets the stepping relay 157, thereby opening the contact 165. The coiling operation continues in a manner similar to that previously described until the coil length counter 86 indicates that there are 600 feet of the insulated conductor 25 on the coiling head 84. At this point the contact 97 closes and again energizes simultaneously the solenoid 155 of the stepping relay 157 and the stepper coil 245, thereby closing the contact 163 and indexing the brush contactor arms 242—242 from positions wherein they contact the eight terminal of each of the banks "A" to "F," inclusive, to positions wherein they contact the ninth terminal.

As shown in Fig. 8, the ninth terminal of bank "B" connects the operating coil 258 of the time delay relay 256 across the bus lines 150 and 151 through the contactor arm 242, the connection to the first terminal of the same bank and the closed contact 261 of the relay 211, which is latched in its operative position by its associated latching mechanism. Energization of the operating coil 258 of the relay 256 closes the contact 254 after a short time delay of approximately one second, thereby energizing the stepper coil 245 and the solenoid 155 of the stepping relay 157 through the normally closed contact 250 of the time delay relay 252. Simultaneously, the operating coil 260 of the relay 252 is energized and the contact 250 opens after a short time delay of approximately one second. The energization and de-energization of the stepper coil 245 immediately causes it to index the contactor arms

242—242 to positions wherein they contact the tenth terminal of each of the banks 'A" to "F," inclusive. The energization of the solenoid 155 of the stepping relay 157 closes the contact 164 and opens the contact 163.

Meanwhile, the coiling operation continues and subsequently when the coil length counter 86 indicates that there are 800 feet of the insulated conductor 25 on the coiling head 84, the stepping relay 157 is actuated to close its contacts 160 and 165 and open its contact 164. The closure of the contact 165 results in the operation of the knife 73, which severs the insulated conductor 25. Thus, the operation of the coiling head 84 ceases when 800 feet of the conductor have been coiled thereupon. Each time the solenoid 74 is energized to actuate the knife 73, the solenoid 108 is energized simultaneously to reset the counting wheels 90—90 of the coil length counter 86 to "zero."

The operator again initiates the coiling operation after securing the leading end of the insulated conductor 25 to the now empty coiling head 80 by moving the cover 87 to the position wherein it encloses the coiling head 80. The operator then removes the 800 foot coil of the insulated conductor 25 from the coiling head 84, and the operation of the coiling head 80 continues in the manner similar to that described in connection with the previous coiling operation. As a result, the insulated conductor 25 is again severed by the knife 73 when 800 feet have been coiled upon the coiling head 80. The coil length counter 86 is again reset simultaneuosly with the actuation of the knife 73.

At this point seven coils containing 1,000 feet of the insulated conductor 25 and two coils containing 800 feet of the insulated conductor, have been formed from the 9,500 feet of the core 10 originally on the reel 11 and there remain only 900 feet of the insulated conductor before the trailing end of the core 10 from the reel 11 reaches the coiling head 84. During the coiling operation in which the ninth coil is formed, it becomes necessary for the operator to connect the leading end of the core 110 on the supply reel 111 to the trailing end of the core 10 leaving the empty supply reel 11 so as to maintain continuous operation of the apparatus.

When the trailing end of the core 10 leaves the reel 11, the runout switch 114 is actuated to its closed position, thereby energizing the solenoid 113. Energization of the solenoid 113 operates the clamp 112 to engage the trailing end of the core 10 and hold it tightly and immovably against the pulley 16. The coiling head 80 continues to coil up the insulated conductor 25 while the clamp 112 is actuated, whereby a substantial portion of the vertical loop which has formed in the path of travel of the core 10 around the pulleys 16, 20 and 17 of the cutover tower is absorbed. The operator makes the connection between the cores 10 and 110 by means of a suitable hook and eye connector.

After the contact 132 of the switch 131 closes to signal that there are only 2,280 feet of the core 10 remaining on the then active supply reel 11, and before the trailing end of the core leaves that reel, the operator turns the key 139, thereby reopening the contact 132. The operator then presets the counting wheels of the runout control counter 130, which has been disconnected from the measuring wheel 135, to indicate the actual, known length of the core 110 on the fresh supply reel 111. Thus, when the trailing end of the core 10 leaves the reel 11 and the switch 114 simultaneously closes, the operating coil 356 of the relay 355 is re-energized to lock in its contact 352, which in turn re-energizes the magnetizing coil 140 of the clutch 137. When the magnetizing coil 140 is energized, the clutch 137 is engaged and the measuring wheel 135 drives the runout control counter 130 again.

When the connection between the cores 10 and 110 is completed, the arm 115 is again depressed to actuate and open the runout switch 114 to de-energize the solenoid 113, whereupon the clamp 112 is released and the capstan 12 withdraws the core from the reel 110. The opening of the switch 114 does not prevent the energization of the magnetizing coil 140 because the contact 352 of the relay 355 is latched closed by the latching mechanism associated with that relay.

At the completion of the ninth coil, which is 800 feet in length, the operator again secures the leading end of the insulated conductor 25 to the coiling head 84 and restarts the coiling operation by moving the cover 87 to the position wherein it encloses the coiling head 84. At the start of this coiling operation, the contactor arms 242—242 of the step selector 195 engage the sixteenth terminal of the terminals 240—240 of each of banks "A" to "F," inclusive. As the coiling operation proceeds and 200 feet of the insulated conductor 25 are coiled upon the coiling head 84, the contactor arms 242—242 are indexed to engage the seventeenth terminal of each of banks "A" to "F," inclusive.

When the contactor arm 242 of the bank "E" contacts the seventeenth terminal, the operating coil 202 of the relay 200 is energized to open the contact 198 and close the contact 204. The latching mechanism associated with the relay 200 holds its contacts in this operative position. The seventeenth to twenty-third terminals, inclusive, of bank "E" are connected commonly through the contact 204 and the primary winding of the transformer 192 across the busses 150 and 151. As a result, the step selector 195 is stepped to its normal start position with the contactor arms 242—242 contacting the second of the terminals 240—240 of each of banks "A" to "F," inclusive. Simultaneously, the reset coil 231 is energized to disengage the latching mechanism associated with the relay 211, thereby permitting the contact 261 to open and the contact 271 to close.

Finally, when the connector joining the two lengths of the cores 10 and 110 reaches a position opposite the knife 73, the operator detects its presence visually and immediately actuates manually the switch 304 to close the contact 302. When the contact 302 closes, it energizes the operating coil 300 of the relay 282 to close the normally open contacts 281 and 295. The closure of the contacts 281 and 295 connects the reset coils 186 and 207 across the busses 150 and 151 through the closed contacts 270, 271, 272 and 274 of the relays 210, 211, 212 and 214, respectively, and the contact arm 242 of bank "F" of the step selector 195. The closure of the contact 302 of the switch 304 also energizes the solenoid 108, which resets the coil length counter 86 to its start position wherein the wheels 90—90 each register "zero."

The contact 302 reopens when the switch 304 is released by the operator. The closure of the contacts 281 and 295 of the relay 282 energizes the operating coil 290 of the relay 291, which closes the contacts 298 and 329 and opens the contact 339. The closure of the contact 298 energizes the solenoid 74, which actuates the knife 73 to sever the insulated conductor 25, and the operation of the coiling head 84 ceases with 900 feet of the insulated conductor 25 coiled thereon and the connector located at the last-wound end of the coil. Thus, the desired result has been achieved, that is, none of the several coils produced contains more than the maximum 1,000 feet of the insulated conductor 25, and none contains less than the minimum 800 feet of the conductor.

After cutting the insulated conductor 25 at the connector, the operator secures the leading end of the insulated conductor 25 to the empty coiling head 80 and moves the cover 87 to enclose it. Thereupon the coiling operation is again initiated and continues in the manner previously described (i. e. forming coils containing 1,000 feet of the insulated conductor 25) until the runout control counter 130 again indicates that there are only 2,280 feet of the core 110 remaining on the then active supply reel 111.

As may be seen from the schematic diagram of the electrical control circuit shown in Figs. 8 and 9, the lengths of the coils produced after the runout control counter

130 signals that there are only 2,280 feet of the core 10 remaining before the connector at the trailing end thereof vary, but never exceed 1,000 feet nor are they ever less than 800 feet. Further, it may be seen from an inspection of the electrical control circuit that the lengths of the coils produced depend upon the footage of the insulated conductor 25 present upon the active coiling head 80 or 84 at the instant the signal is received from the runout control counter 130, which in turn is dependent solely upon the length of core initially on the supply reel. Set out below in tabular form are all the possible combinations of coil lengths which may be produced after the signal is received from the counter.

Length (in feet) of Insulated Conductor on the Coiling Head at the Instant of Signal from Runout Control Counter	Lengths (in feet) of Coils Completed After the Signal from Runout Control Counter				
	Coil I	Coil II	Coil III	Coil IV	Coil V
0–199	800	800	800	800–999	
200–399	1,000	800	800	800–999	
400–599	1,000	1,000	800	800–999	
600–799	1,000	1,000	1,000	800–999	
800–999	800–999	800	800	800	800

It may be seen that if at the time the signal is received from the runout control counter 130 the coiling head contains 800 feet or more of the insulated conductor 25, the knife 73 is actuated instantaneously.

To illustrate the significance of this table, let it be assumed that the contact 132 closes at a time when there are 550 feet of the insulated conductor 25 on one of the coiling heads 80 and 84. The operation of the coiling head will continue until the coil contains 1,000 feet of the insulated conductor 25, and the subsequent coil (coil II) will also contain 1,000 feet. However, the next coil (coil III) will contain 800 feet, and the last coil (coil IV) will contain 950 feet of the insulated conductor 25 with the connector at the trailing end of the last coil.

If it is assumed that the coiling head being operated contains 810 feet of the insulated conductor 25 at the time when the contact 132 closes, the coil in formation will be terminated immediately and will contain 810 feet of the conductor. Each of the four subsequent coils will contain 800 feet of the insulated conductor 25.

It will be understood that the above-described methods and apparatus may be readily modified to produce coils of other given lengths without departing from the spirit and scope of the invention. It will be understood further that the filamentary materials other than insulated conductors may be coiled utilizing the above-described methods and apparatus.

What is claimed is :

1. Apparatus for coiling filamentary materials, which comprises means for advancing a given length of a filamentary material longitudinally, means for coiling up the advancing filamentary material, means for normally intermittently terminating and reinitiating the operation of the coiling means to form a plurality of coils each containing a predetermined length of the material, means for interrupting the normal coiling sequence when a predetermined amount of the material remains to be coiled, and means for controlling the coiling means thereafter to form a plurality of coils each containing no more than said predetermined length of material and no less than a predetermined lesser length of material.

2. Apparatus for coiling filamentary conductors into predetermined lengths, which comprises means for advancing a given length of a filamentary conductor from a supply thereof along an elongated path of travel, means for coiling up the filamentary conductor at the end of its path of travel, cutting means operable for severing the conductor adjacent to the coiling means, control means normally operating the coiling means and cutting means in a predetermined sequence so as to form coils each containing a predetermined length, means for interrupting the normal operating sequence of the coiling means and cutting means when only a predetermined amount of the conductor remains to be coiled, and secondary control means energized when said normal operating sequence is interrupted for operating the coiling means and cutting means subsequently to form a plurality of coils each containing no more than said predetermined length of the conductor nor less than a predetermined lesser length of the conductor.

3. Apparatus for coiling filamentary material into predetermined lengths, which comprises means for advancing a given length of a filamentary material from a supply thereof along an elongated path of travel, means for coiling up the filamentary material at the end of its path of travel, counting means positioned adjacent to the coiling means for indicating the length of said material advanced to the coiling means, a cutter positioned adjacent to the coiling means, means responsive to said counting means for operating the cutter normally to sever the filamentary material whenever said counting means indicates that a predetermined length of the material has been advanced to the coiling means, means for terminating and reinitiating the operation of the coiling means each time the cutter is operated whereby normally a plurality of coils are formed each containing a predetermined length of material, a second counting means positioned at the supply for indicating the length of material remaining on the supply at any time, and means actuated by said second counting means when the supply of material is nearly exhausted and a predetermined amount of the material remains to be coiled for interrupting the normal cutting and coiling sequence and for controlling the coiling means and cutter subsequently to form a plurality of coils each containing no more than said predetermined length of material nor less than a predetermined lesser length of material.

4. Apparatus for coiling filamentary material into predetermined lengths, which comprises means for advancing a given length of a filamentary material from a supply thereof along an elongated path of travel, means for coiling up the filamentary material at the end of its path of travel, counting means positioned adjacent to the coiling means for indicating the length of said material advanced to the coiling means, a solenoid-operated cutter positioned adjacent to the coiling means, electrical control means actuated normally each time the counting means indicates that a predetermined length of the material has been advanced to the coiling means for energizing the solenoid of the cutter to operate the cutter to sever the filamentary material and for subsequently terminating and reinitiating the operation of the coiling means whereby normally a plurality of coils are formed each containing a predetermined length of material, a second counting means positioned at the supply for indicating the length of material remaining on the supply at any time, and electrical control means actuated by said second counting means when the supply of material is nearly exhausted and a predetermined length of the material remains to be coiled for interrupting the normal coiling and cutting sequence and for controlling the coiling means subsequently to form a plurality of coils each containing no more than said predetermined length of material nor less than a predetermined lesser length of material.

5. Apparatus for coiling filamentary material into predetermined lengths, which comprises means for advancing a given length of a filamentary material from a supply thereof along an elongated path of travel, means for coiling up the filamentary material at the end of its path of travel, counting means positioned adjacent to said coiling means for indicating the length of filamentary material advanced to the coiling means, a solenoid-operated cutter positioned adjacent to the coiling means, an electrical control circuit normally responsive to the counting means

for operating the cutter to sever the filamentary material and terminate the operation of the coiling means each time said counting means indicates that a predetermined length of the material has been advanced to the coiling means, means for reinitiating the operation of the coiling means, a runout control counter positioned at the beginning of the path of travel of the filamentary material and designed to indicate the length of material remaining instantaneously at the supply, a secondary electrical control circuit, and means actuated by the counter when the supply is nearly exhausted and the counter indicates that a predetermined length of the material remains to be coiled for energizing the secondary electrical control circuit, said last-mentioned circuit being designed to interrupt the normal coiling and cutting sequences and to selectively institute another series of different coiling sequences depending upon the length of material contained in the partial coil in process when said secondary circuit is energized, whereby the coiling means and the cutter are controlled subsequently to form a plurality of coils, each containing no more than said predetermined length of material nor less than a predetermined lesser length of material.

6. In apparatus for coiling a filamentary material into predetermined lengths including a supply reel containing a given length of the filamentary material, means for advancing the filamentary material continuously from the supply reel along an elongated path of travel, a pair of coiling heads positioned at the end of said path of travel for coiling up the filamentary material and a cutter positioned adjacent to the coiling heads, the improvement which comprises primary control means for normally controlling the operation of the cutter and the coiling heads to intermittently sever the filamentary material and terminate and reinitiate the operation of the coiling heads in a normal predetermined operating sequence so as to form coils each containing an identical predetermined length of the filamentary material, means for rendering the primary control means inoperative when only a predetermined amount of the filamentary material remains on the supply reel thereby interrupting said normal predetermined operating sequence, and secondary control means operable when the primary control means is rendered inoperative for subsequently operating the cutter and the coiling heads to perform a series of different operating sequences depending upon the length of the filamentary material contained in the partial coil in process at the time the normal predetermined operating sequence is interrupted, whereby the cutter and coiling heads are controlled subsequently to form a plurality of coils, each containing no more than said predetermined length of the filamentary material nor less than a predetermined lesser length of the filamentary material.

7. In apparatus for coiling a filamentary material into predetermined lengths, including a supply reel containing a given length of the filamentary material, means for advancing the filamentary material continuously from the supply reel along an elongated path of travel, a pair of coiling heads positioned at the end of said path of travel, means for driving the coiling heads alternately to coil up the filamentary material thereon and a cutter positioned adjacent to the coiling heads, the improvement which comprises a coil length counterpositioned adjacent to the coiling heads for registering the length of the filamentary material advanced to the coiling heads, primary control means responsive to the coil length counter for operating the cutter normally to sever the filamentary material each time the coil length counter indicates that a predetermined length of the filamentary material has been advanced to the coiling heads, means for terminating and reinitiating the operation of the coiling head driving means each time the cutter is operated, a runout control counter for indicating the amount of filamentary material remaining on the supply reel at any time, means responsive to the runout control counter for rendering the primary control means inoperative when only a predetermined amount of the filamentary material remains on the supply reel, and secondary control means operable when the primary control means is rendered inoperative for controlling the operation of the cutter subsequently to form from the remainder of the filamentary material a plurality of coils, each containing no more than said predetermined length thereof nor less than a predetermined lesser length thereof.

References Cited in the file of this patent

UNITED STATES PATENTS

2,122,468	Hill	July 5, 1938
2,122,485	Nelson	July 5, 1938
2,605,052	Henning et al.	July 29, 1952