July 14, 1959 C. DEVAUD 2,894,511

SWATHING MEANS FOR INFANTS

Filed Jan. 19, 1955

Fig.1

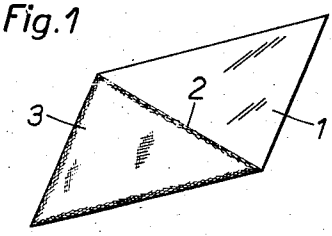

Fig.2

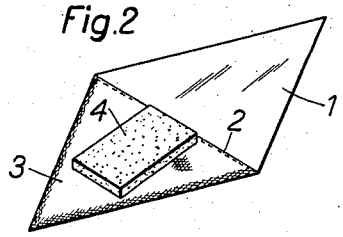

Fig.3

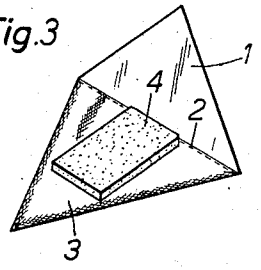

Fig.4

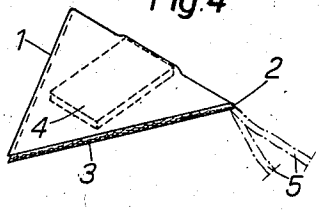

Fig.5

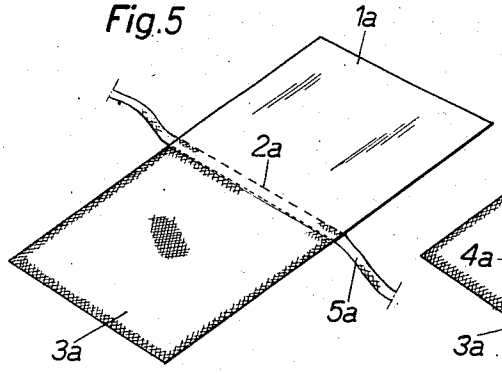

Fig.6

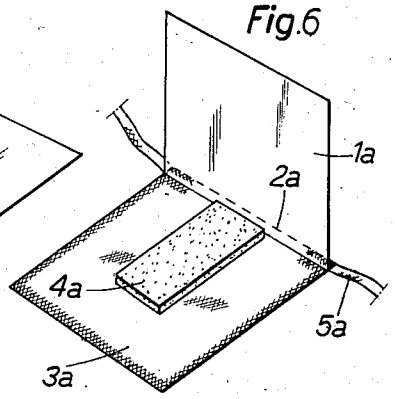

Fig.7

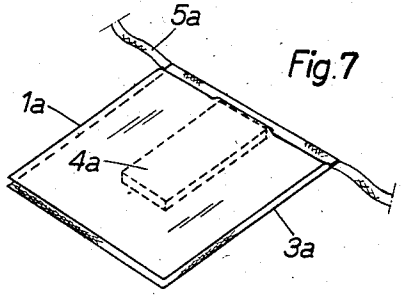

INVENTOR.
CHARLES DEVAUD

BY
Strauch & Faber

ATTORNEYS

United States Patent Office 2,894,511 Patented July 14, 1959

2,894,511

SWATHING MEANS FOR INFANTS

Charles Devaud, Geneva, Switzerland, assignor to Societe Anonyme de l'Ancienne Maison Devaud, Kunstle & Co., Geneva, Switzerland

Application January 19, 1955, Serial No. 482,845

Claims priority, application Switzerland January 26, 1954

2 Claims. (Cl. 128—290)

The present invention relates to swathing means for infants.

Up to now it has been considered adequate to swathe infants into diapers and the like made from highly absorbent pieces of fabric so that they are able to absorb as large quantities of urine as possible.

The fibers of the textiles used up to now for this purpose are more or less absorbent by nature, so that they tend to absorb larger or smaller quantities of liquid. Thus, cotton easily absorbs water and retains quite large quantities thereof. Wool is less absorbent than cotton. Synthetic fibers of a non-cellulosic nature, e.g. nylon fibers or polyvinyl chloride fibers, mostly have a small power of absorption.

The fibers coming into consideration for the said purpose can also be classified with respect to their capillary properties into water-attracting and water-repellent fibers. It is well-known that capillary interaction between a solid body and a liquid may be of two kinds according to the chemical nature of the solid body and of the liquid. With a given liquid such as water, there are some solid materials in which the surface tension of the liquid tends to draw the liquid into narrow intervals of these solid materials such as those existing between the individual yarns or fibers of a textile material and to retain the liquid in such intervals; these materials will hereinafter be termed "liquid-attracting" with respect to such given liquid, and "water-attracting" if that liquid is water. Examples of water-attracting fiber materials are most water-absorbent fibers such as cotton or cellulose fibers, and also certain non-absorbent fibers such as nylon or glass fibers.

On the other hand, there are solid materials in which the surface tension of the liquid tends to expel the liquid from such narrow intervals in the material, or to keep the liquid out of these intervals. These materials will hereinafter be referred to as "liquid-repellent" with respect to such given liquid, and "water-repellent" if that liquid is water. It is well known that, for instance, glass is repellent to mercury, and that greased surfaces are repellent to water. Among water-repellent fiber materials, the most important known at present is polyvinyl chloride. It will thus be noted that although both nylon and polyvinyl chloride are substantially non-absorbent to water, they differ fundamentally as to their capillarity effects in that nylon is water-attracting and polyvinyl chloride is water-repellent.

The main object of the present invention is to provide swathing means by which the skin is maintained substantially out of contact with the urine so that it is prevented from supplying to the urine such ferments as would cause it to become alkaline and to yield ammonia.

It has been found that this object can be attained by providing an absorbent layer of the usual kind, and to insert between this layer and the skin of the infant another layer made from non-absorbent, water repellent fiber material such as polyvinyl chloride. The urine secreted by the infant therefore will be retained in the

layer made from non-absorbent, water-repellent material neither by absorption nor by capillary effect. It has been found that although the capillary effect in this layer tends to oppose any penetration of the urine into that layer, it is readily overcome by the pressure of the infant's skin against the layer, whereupon it expels the urine from the layer to the side thereof remote from the skin until such urine contacts the first-mentioned absorbent layer. Due to its water-attracting capillary effect, the latter then extracts the urine from the said layer of non-absorbent material and absorbs it. As a result, the layer of non-absorbent material remains dry and the urine is maintained out of contact with the infant's skin.

In order that the invention may be more easily understood, two embodiments thereof are shown, for the purpose of illustration only, in the accompanying drawings in which:

Figs. 1 to 4 illustrate a first embodiment of the swathing means according to the invention, in which these swathing means are in the shape of a triangular composite diaper shown in the several figures at various stages of its preparation; and

Figs. 5 to 7 illustrate another embodiment of the said swathing means, in the shape of a square composite diaper also shown at various stages of its preparation in the several figures.

The composite diaper illustrated in Figs. 1 to 4 comprises a triangular piece 1 of looped fabric, knitted from non-absorbent water-repellent fiber material such as yarn made from polyvinyl chloride fibers. Along its side 2, the piece of knitted fabric 1 is sewn to a supple cover piece 3 which may be made from rubber-like or other impermeable sheet material. The shape of cover piece 3 conforms with that of the triangular piece 1. As shown in Fig. 2, a pad 4 of rectangular shape, made from absorbent material, for instance from cellulose material, is loosely placed on the inner face of the cover piece 3 in such a way that the middle plane of the pad approximately coincides with a line (not shown) running at right angles to the seam line 2 through the opposite apex of the cover contour.

The composite diaper is then completed by swinging the triangular piece 1 of knitted fabric upwards about the seam line 2 as shown in Fig. 3, and by turning it over on the cover piece 3 as shown in Fig. 4. The absorbent pad 4 is then retained between the inner piece 1 of knitted fabric and the outer cover piece 3. The composite diaper, which may comprise a swathing-band as shown in dash-and-dot lines at 5, is then ready for use. After use, the absorbent pad 4 may be removed and replaced by a fresh one.

The composite diaper shown in Figs. 5 to 7 differs from that shown in Figs. 1 to 4 in that the piece 1*a* of looped fabric knitted from non-absorbent water-repellent material is rectangular, this piece being sewn along its edge 2*a* to an impermeable cover piece 3*a* of similar rectangular shape. In Fig. 6, a rectangular pad 4*a* is shown placed on the cover piece 3*a* with its longitudinal middle plane coinciding at least approximately with the longitudinal center line of cover piece 3*a*. 5*a* indicates a swathing band which is sewn along its two edges to the pieces 1*a* and 3*a* in the region of their connecting edges 2*a*.

As shown in Figs. 6 and 7, the piece 1*a* of non-absorbent knitted fabric is turned over about the band 5*a* and applied to the cover piece 3*a*. The absorbent pad thus is enclosed between the inner piece 1*a* and the outer cover piece 3*a*, and the composite diaper is ready for use.

In alternative embodiments, the absorbent pad 4 or 4*a* could be omitted and the outer cover piece 3 or 3*a*,

respectively, could be made from absorbent material, e.g., from a conventional absorbent diaper. It would also be possible to omit the sewn junction between the piece of non-absorbent knitted fabric 1, 1*a* and the outer cover piece 3, 3*a* which could be formed by a conventional absorbent diaper, so that the pieces 1, 1*a* on one hand, and 3, 3*a* on the other hand, would be separate from each other and individually replaceable. It will be understood that in such swathing means, the invention only comprises the inner layer of looped fabric made from non-absorbent, water-repellent material while the conventional absorbent diaper, as a separate article, is outside the scope of this invention.

The inner layer of looped fabric preferably is made from polyvinyl fiber yarn knitted in ribbed fashion. Polyvinyl fibers are remarkable in that they are water-repellent and therefore do not swell, they are easy to wash and are not colored by the fecal matter with which they may come into contact. Knitted or looped fabric is preferable to woven fabric both because of its suppleness and because the size, shape and arrangement of the intervals between the fibers is more suitable for the present purpose. This is particularly so when the fabric is knitted in ribbed fashion. One-and-one, two-and-one, or two-and-two ribbing may be used, but two-and-two ribbing is particularly advantageous.

When the described swathing means are used with the inner layer of non-absorbent, water-repellent material in contact with the baby's skin, the urine is

pressed into the intervals between the non-absorbent fibers of that layer is delivered on the opposite face thereof to the outwardly adjacent absorbent layer such as a pad of cellulosic material or a conventional absorbent diaper. Thereby, the skin of the baby remains permanently dry and there is no interaction between the ferments present on the skin and the urea contained in the urine.

What I claim is:

1. Swathing means for infants comprising an inner layer of looped fabric made from polyvinyl chloride fiber material.

2. Swathing means for an infant comprising a relatively thick inner layer of looped fabric; said fabric being characterized in having the non-absorbent and water repellent properties of polyvinyl chloride and forming a plurality of interstices; said interstices having cross-sectional areas of a magnitude to normally prevent the flow of liquid therethrough by the surface tension of said liquid with respect to the surfaces of said interstices to make said swathing means normally impervious to liquid.

References Cited in the file of this patent

UNITED STATES PATENTS

634,281	Wolf	Oct. 3, 1899
811,704	Dix	Feb. 6, 1906
2,062,978	King	Dec. 1, 1936
2,695,025	Andrews	Nov. 23, 1954