Nov. 2, 1926.

1,605,011

L. P. STOREY

FIRE HYDRANT

Filed May 2, 1923

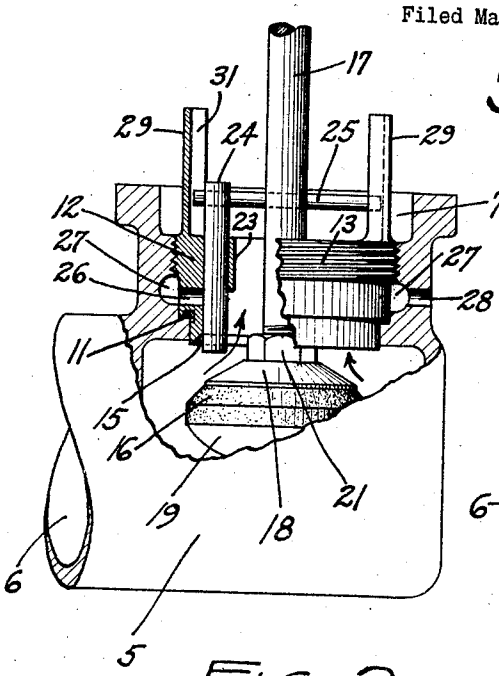

FIG. 2

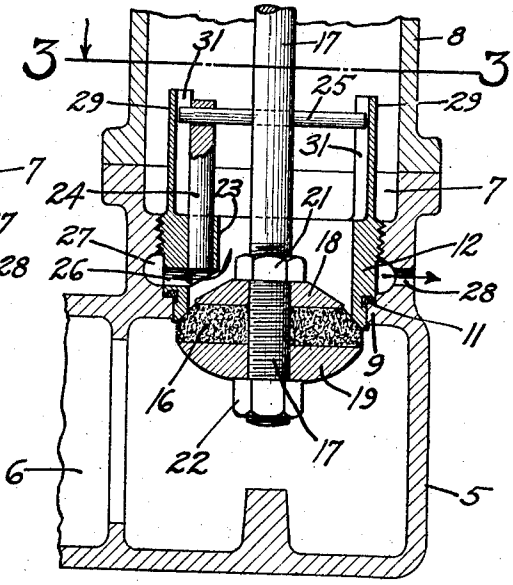

FIG. 1

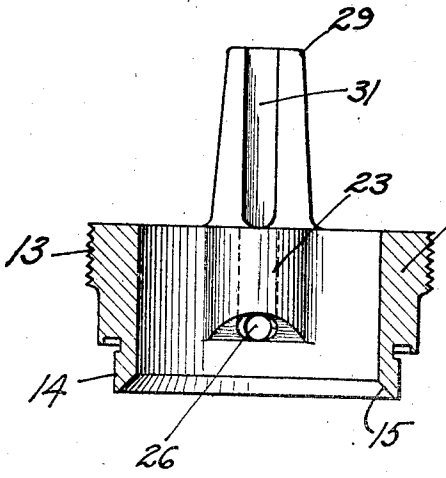

FIG. 4

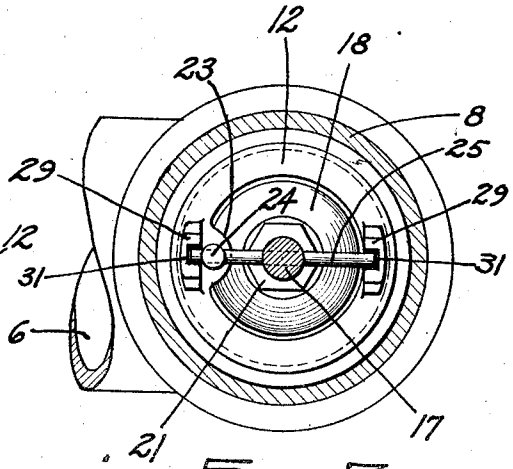

FIG. 3

INVENTOR
LEONIDAS P. STOREY
By Paul, Paul & Moore
ATTORNEYS

Patented Nov. 2, 1926. 1,605,011

UNITED STATES PATENT OFFICE.

LEONIDAS P. STOREY, OF ST. PAUL, MINNESOTA, ASSIGNOR OF ONE-HALF TO WATEROUS FIRE ENGINE CO., OF ST. PAUL, MINNESOTA, A CORPORATION OF MINNESOTA.

FIRE HYDRANT.

Application filed May 2, 1923. Serial No. 636,165.

This invention relates to improvements in fire hydrants particularly adapted for use in conducting the water from the usual city water mains to the street surface, and more particularly relates to improvements in the waste water valve mechanism of such hydrants.

The object of this invention is to provide a fire hydrant having an improved waste water valve mechanism comprising a vertically mounted plunger which will be positively operated to open or close the waste water port commensurate with the movement of the hydrant valve.

A further object of the invention is to provide a fire hydrant having means for vertically guiding the waste water plunger in its up and down movement.

A further object is to provide a fire hydrant having a waste water mechanism so constructed as to eliminate the possibility of small stones lodging between the plunger and its seat and thus rendering the mechanism inoperable.

A further object is to provide a fire hydrant having means whereby any torsional strain which may be imparted to the main valve stem will not be reflected upon the plunger of the waste water mechanism.

A further object is to provide a fire hydrant having a waste water mechanism of very simple and inexpensive construction all parts of which are readily interchangeable, thereby greatly reducing the manufacturing cost and also considerably reducing the maintenance cost of such a hydrant.

Other objects of the invention will more fully appear from the following description and the accompanying drawings and will be pointed out in the annexed claims.

In the drawings, there is illustrated a structure designed to carry out the objects of the invention, but it is to be understood that the invention is not confined to the exact features shown as various changes may be made within the scope of the claims which follow.

In the drawings:

Figure 1 is a vertical sectional view of the lower portion of a fire hydrant, showing my improved waste water mechanism applied thereto, same being shown in open position.

Figure 2 is a view similar to Figure 1, showing the mechanism in closing position, as positioned when the main valve is open;

Figure 3 is a cross sectional view on the line 3—3 of Figure 1, showing the means provided upon the main valve stem for actuating the waste water plunger; and

Figure 4 is a detail sectional view of the valve seat ring, showing same removed from the hydrant and also showing the means provided thereon for vertically guiding the plunger.

In the selected embodiment of the invention here shown for purposes of disclosure, there is illustrated the lower portion or base 5 of a fire hydrant having the usual side inlet opening 6 to which the water main is connected. The upper portion of the base 5 is provided with the usual opening 7 to which the stock or body 8 of the hydrant is secured.

As shown in Figures 1 and 2, an inwardly directed annular flange 9 is provided at the bottom of the opening 7 adapted to form a seat for the packing 11 and a valve seat ring 12. The ring 12 is preferably provided with screw threads 13 and the opening 7 is correspondingly threaded, by means of which the ring may be securely clamped against the packing 11 resting upon the seat 9, thereby providing a water-tight joint between the ring and the seat. The flange 9 is suitably bored to receive the lower reduced portion 14 of the seat ring. An annular valve seat 15 of ordinary construction, is provided at the lower terminal end of the reduced portion 14 of the ring 12. This valve seat is adapted to cooperate with a suitable valve 16, preferably of leather, which is rigidly and securely retained upon the valve stem or spindle 17 between washers 18 and 19 and the nuts 21 and 22, received in threaded engagement thereon, as clearly shown in Figure 1.

The important feature of this invention resides in the novel means provided for re-

leasing the waste water from the stock 8 of the hydrant after the valve 16 has been closed, as shown in Figure 1.

An inwardly projecting integral lug 23 is preferably provided upon the inner surface of the wall of the seat ring 12, having its upper face substantially flush with the upper edge of the ring. This lug is suitably bored to receive therein a cylindrical plunger 24, preferably of any suitable non-corrosive material, such as bronze, and operable by means of a horizontal transverse guide rod 25 secured to the valve stem 17. It will be noted, by referring to Figures 1 and 2, that the upper end of the plunger 24 is apertured to loosely receive one end of the rod 25 therein. An aperture 26 is provided in the wall of the seat ring 12 in radial alinement with the plunger 24 and directly beneath the lug 23. This aperture communicates with an annular groove 27 provided in the wall of the opening 7, which has an outlet port 28 leading from the groove through the wall to the exterior of the hydrant. Thus, when the valve 16 is closed and the plunger 24 is in its raised open position, as shown in Figure 1, the waste water contained within the stock 8 of the hydrant will flow through the aperture 26 to the groove 27 and thence through the outlet port 28 to the exterior of the hydrant, thereby draining the water from the hydrant. When the valve 16 is opened, as shown in Figure 2, the plunger 24 will be moved downwardly to closing position by means of the rod 25, thereby closing the aperture 26 and preventing any water from escaping when the hydrant is in use. The resultant pressure of the water against the inner side of the plunger will tend to force the adjacent contacting surfaces around the aperture 26 in closer relation, and thereby positively prevent leakage of water therethrough when the hydrant is functioning.

Means are preferably provided, by the use of which, any torsional strain which may be imparted to the valve stem 17 in opening and closing the valve 16, will not be reflected upon the plunger 24. Such means consist in providing opposed integral lugs 29 upon the upper edge of the seat ring 12. As is shown in Figure 4, these lugs project upwardly therefrom and are provided upon their inner surfaces with suitable guideways 31, which are adapted to receive therein the terminal ends of the guide rod 25. Referring particularly to Figure 4, it will be noted that the ends of the rod 25 are in close contact with the sides of the vertical guideways 31, thereby positively preventing such ends from relative horizontal movement, although allowing the rod freedom of movement vertically when the valve stem 17 is actuated to open or close the valve 16. Therefore, by the employment of the novel mechanism above described, for vertically guiding and actuating the plunger 24 in conjunction with the valve stem 17, and also as a result of the loose connection provided between the plunger and the end of the rod 25, the plunger will at all times be free to move vertically in its bearing in the lug 23 without a tendency to bind, and also any torsional strain which might be imparted to the valve stem 17 will not be transmitted to the plunger 24.

To operate the novel hydrant valve mechanism here shown, the valve stem 17 is forced downwardly from the position shown in Figure 1 to that shown in Figure 2 by means of the usual operating mechanism provided at the top of the hydrant and which I have thought unnecessary to show in the drawings, as it forms no part of the present invention. When the valve 16 is thus opened the plunger 24 will be moved from opening to closing position, as shown, thereby preventing any water from going to waste through the aperture 26 while the hydrant is open to permit the flow of water from the mains to flow upwardly through the stock 8 of the hydrant to the usual discharge opening provided at the top of the hydrant, (not here shown) from whence it may be conducted to the desired place by the usual hose connection. Conversely, when the valve 16 is moved upwardly from the position shown in Figure 2, to the closing position shown in Figure 1, the plunger 24 will simultaneously be moved from closing to opening position, thereby permitting the water contained within the stock of the hydrant to flow to waste through the aperture 26, groove 27 and the outlet port 28.

From the foregoing, therefore, it is apparent that the mechanism is automatic and positive in action, and permits the escapement of water entrapped in the hydrant only at such time as necessary to prevent the entrapped water from freezing therein, which might cause serious damage to the hydrant. The non-corrosive plunger fitting a similar bearing surface in the valve ring lug provides a very durable construction under all conditions of service.

This novel valve mechanism is also very simple and inexpensive in construction, comprising but few parts, and all such parts being so designed and constructed as to be readily and quickly removed from the stock of the hydrant for replacement, should any of the parts be found defective or become damaged or worn from long use. By thus simplifying the construction of a hydrant, the manufacturing cost and also the maintenance cost of such a hydrant will be greatly reduced.

I claim as my invention:

1. In a fire hydrant having a shoe, and stock thereon and a communicating passage between them, a valve seat ring fitting within said passage and having a vertical bore therein and a radially extending waste water port and a valve seat below said port, a valve fitting said seat and a stem for said valve having a cross member adjacent said valve, a cut-off mounted to move vertically in said bore with said stem and valve and loosely supported at its upper end by said cross member to allow it to seat itself against the walls of said bore, the vertical movement of said cut-off across the entrance to said port alternately opening and closing it.

2. A fire hydrant comprising a shoe and a stock thereon having a communicating passage between them, a valve seat ring fitting within said passage and having a waste water port extending therethrough and lugs projecting upwardly from said ring, a valve fitting said seat ring below said port and a stem for said valve, a cross rod mounted in said stem and having its ends fitting vertical guides in said lugs, a plunger mounted on said rod and slidable in an orifice in said seat ring and bearing on said ring above and below said port and bridging said port to close the passage therethrough when said valve is opened.

3. In a fire hydrant, a shoe and stock thereon having a communicating passage between them, a valve and stem therefor a valve seat ring fitting within said passage and having a waste water port extending radially therethrough and provided with a vertical circular bore, a cylindrical plunger fitting within said bore and loosely connected at its upper end adjacent said valve with said valve stem for vertical movement to open or close said port, said loose connection, allowing said plunger freedom of movement to seat itself against the walls of said bore, whereby pressure of the water when said valve is opened, forces said plunger against the walls of said waste water port and prevents leakage therethrough.

4. A fire hydrant comprising a shoe and stock thereon having a communicating passage between them, a valve seat ring fitting within said passage and having a waste-water port extending therethrough and lugs projecting upwardly from said ring, a valve fitting said seat ring below said port and a stem for said valve, a cross rod mounted in said stem and having its ends fitting vertical guides in said lugs, a plunger mounted on said rod and slidable in an orifice in said seat ring and bearing on said ring above and below said port and bridging said port to close the passage therethrough when said valve is opened, said plunger and its seats having curved meeting faces held in close contacting relation by the pressure of the water on said plunger.

5. A fire hydrant comprising a shoe and stock thereon having a communicating passage between them, a valve seat ring fitting within said passage and having a waste-water port extending therethrough and lugs projecting upwardly therefrom, said ring also having a vertically arranged orifice above and adjacent said waste-water port, a valve fitting said seat ring below said port and a stem for said valve, a cross rod mounted in said stem and having its ends fitting vertical guides in said lugs, a cylindrical plunger having its upper end loosely mounted on said cross rod and its lower end fitting the orifice in said seat ring and bearing on said ring above and below said port and adapted to bridge said port and close the opening therethrough when said valve is opened, said plunger having freedom of movement on said cross rod to adjust itself to the walls of said seat ring and being held snugly against said walls by the lateral pressure of the water in said passage.

6. In a fire hydrant, the combination with a valve seat ring having a waste water port and a valve and stem therefor, of a plunger mounted to open and close said waste water port with the movement of said valve, a guide mounted in said stem and having one end loosely fitting within an orifice in said plunger, whereby when said stem is moved vertically a corresponding movement will be imparted to said plunger.

7. A fire hydrant comprising a shoe and stock thereon having a communicating passage between them, a valve seat ring fitting within said passage and having a waste-water port extending therethrough, and lugs projecting upwardly from said ring and provided with vertical guideways therein, a valve fitting said seat ring below said port and a stem for said valve, a cross rod mounted in said stem, and having its ends fitting within said vertical guideways and held thereby against horizontal movement but having freedom of vertical movement in said guideways, a plunger mounted on said rod and slidable in an orifice in said seat ring and bridging said port to close the passage therethrough when said valve is opened.

8. A fire hydrant comprising a shoe and stock thereon having a communicating passage between them, a valve seat ring fitting within said passage and having a waste water port extending outwardly therethrough, said ring also having a vertically arranged orifice adjacent said waste water port, a valve fitting said seat ring below said port and a stem for said valve, a cross member mounted in said stem near said valve and vertical guides therefor at the ends thereof, a cylindrical plunger having

its upper end loosely connected to said cross member and its lower end fitting the orifice in said seat ring and adapted to bear on said ring above and below said port and bridge and close the opening therethrough when said valve opened, said loose connection allowing the plunger to have freedom of movement with respect to said cross rod to adjust itself to the walls of said seat ring and to be held snugly against said walls by the lateral pressure of the water in said passage.

In witness whereof, I have hereunto set my hand this 28th day of April 1923.

LEONIDAS P. STOREY.