US007154873B2

(12) **United States Patent**
Yi

(10) **Patent No.: US 7,154,873 B2**
(45) **Date of Patent: Dec. 26, 2006**

(54) **RADIO COMMUNICATION SYSTEM AND METHOD HAVING A RADIO LINK CONTROL LAYER**

(75) Inventor: **Seung June Yi**, Seoul (KR)

(73) Assignee: **LG Electronics Inc.**, Seoul (KR)

(*) Notice: Subject to any disclaimer, the term of this patent is extended or adjusted under 35 U.S.C. 154(b) by 848 days.

(21) Appl. No.: **09/972,051**

(22) Filed: **Oct. 9, 2001**

(65) **Prior Publication Data**

US 2002/0042270 A1 Apr. 11, 2002

(30) **Foreign Application Priority Data**

Oct. 7, 2000 (KR) P2000-59015
Oct. 7, 2000 (KR) P2000-59016

(51) **Int. Cl.**
H04Q 7/24 (2006.01)
H04J 3/16 (2006.01)

(52) **U.S. Cl.** **370/338**; 370/469

(58) **Field of Classification Search** ..... None
See application file for complete search history.

(56) **References Cited**

U.S. PATENT DOCUMENTS

5,497,404 A * 3/1996 Grover et al. 375/240.27
5,708,659 A * 1/1998 Rostoker et al. 370/392
5,838,782 A * 11/1998 Lindquist 379/221.1
6,272,117 B1 * 8/2001 Choi et al. 370/330
6,480,477 B1 * 11/2002 Treadaway et al. 370/314
6,683,860 B1 * 1/2004 Forssell et al. 370/329
6,725,039 B1 * 4/2004 Parmar et al. 455/436

FOREIGN PATENT DOCUMENTS

WO WO 00/21253 4/2000

OTHER PUBLICATIONS

3GPP TSG-RAN WG2 Meeting #17 Sophia Antipolis, France, pp. 1-7, Nov. 13-17, 2000.
H.Holma et al., "WCDMA for UMTS—Chapter 7 Radio Interface Protocols" John Wiley & Sons, Ltd., pp. 121-142, 2000.
3GPP™: "3rd Generation Partnership Project; Technical Specification Group Radio Access Network; RLC Protocol Specification", pp. 1-28, 1999.

* cited by examiner

Primary Examiner—Chau Nguyen
Assistant Examiner—Cynthia L. Davis
(74) *Attorney, Agent, or Firm*—Lee, Hong, Degerman, Kang & Schmadeka

(57) **ABSTRACT**

Disclosed are a radio link control (RLC) entity and a data processing method for the RLC entity. The RLC entity includes a transmission data storing module that stores PDUs corresponding to SDUs transmitted from a first upper layer and outputs the stored PDUs by SDU units, a ciphering module that ciphers the PDUs stored in the transmission data storing module and transmitting the ciphered PDUs to a first RLC entity, a deciphering module that deciphers the ciphered PDUs transmitted from a second RLC entity, and a received data storing module that stores the deciphered PDUs and outputs the PDUs toward a second upper layer in the form of SDU units.

18 Claims, 11 Drawing Sheets

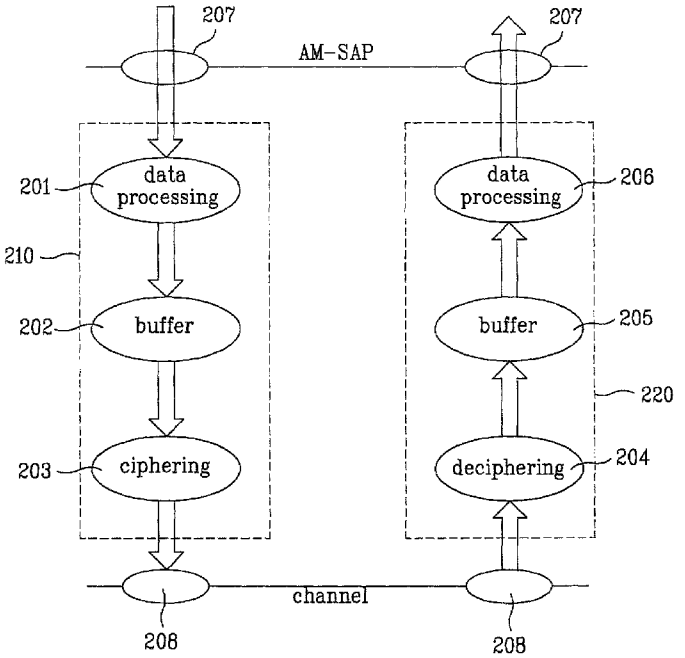

FIG. 1
Related Art

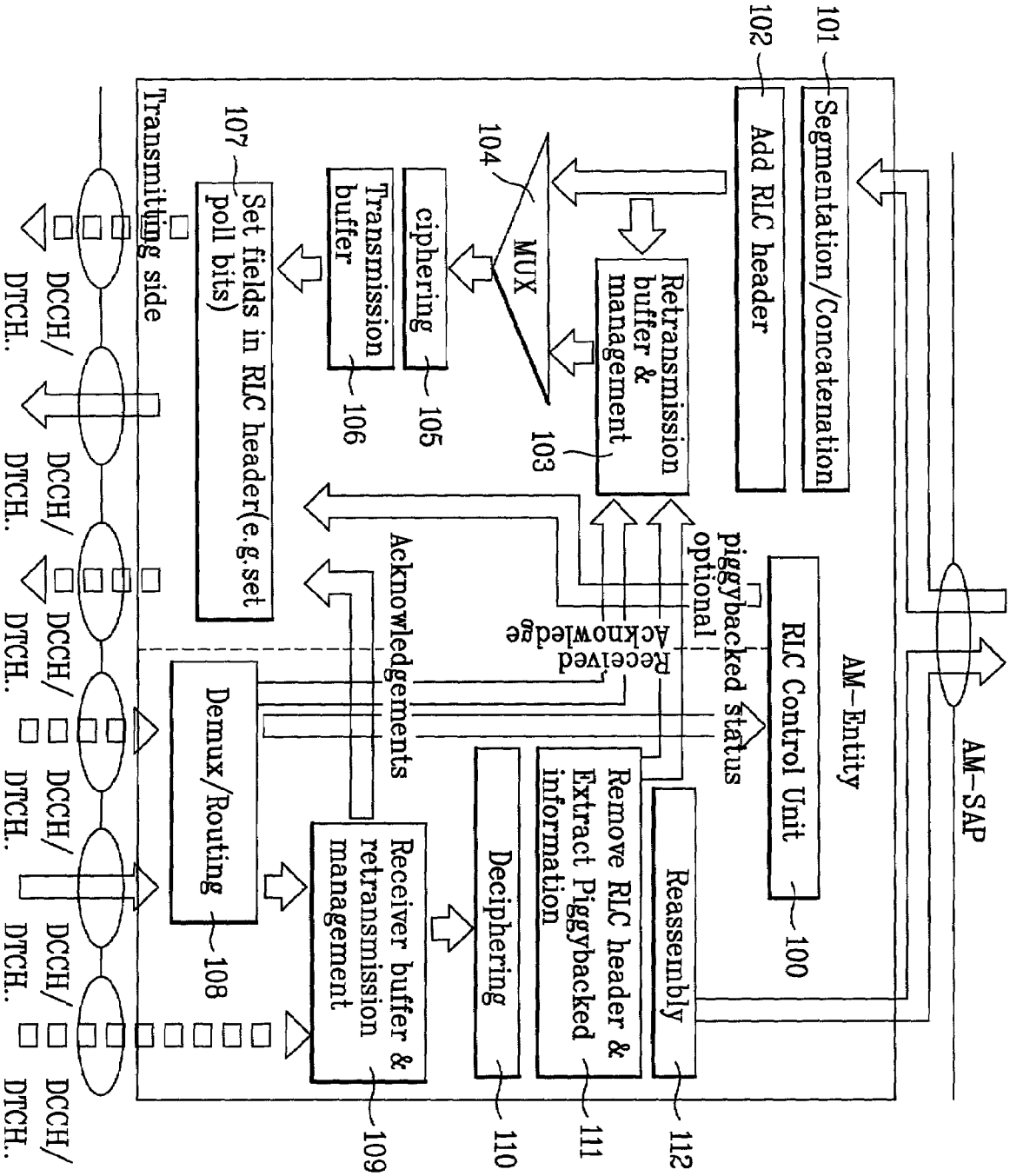

FIG. 2
Related Art

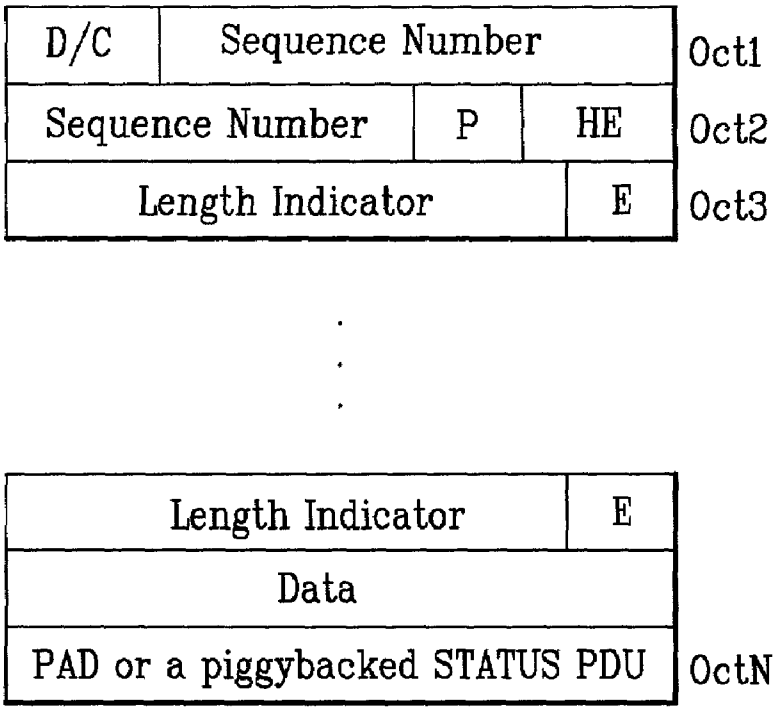

FIG. 3
Related Art

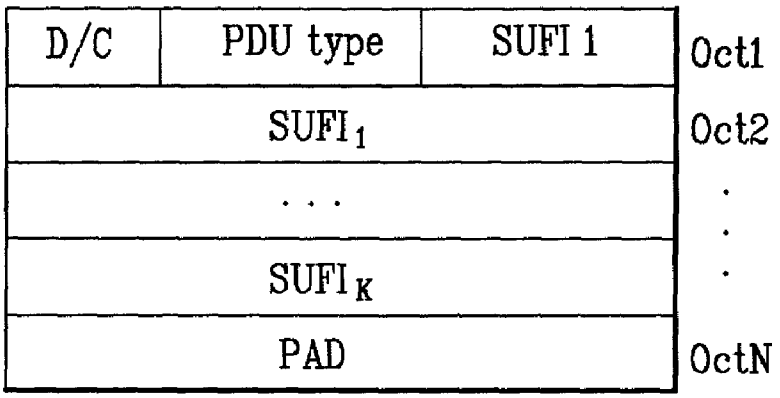

FIG. 4
Related Art

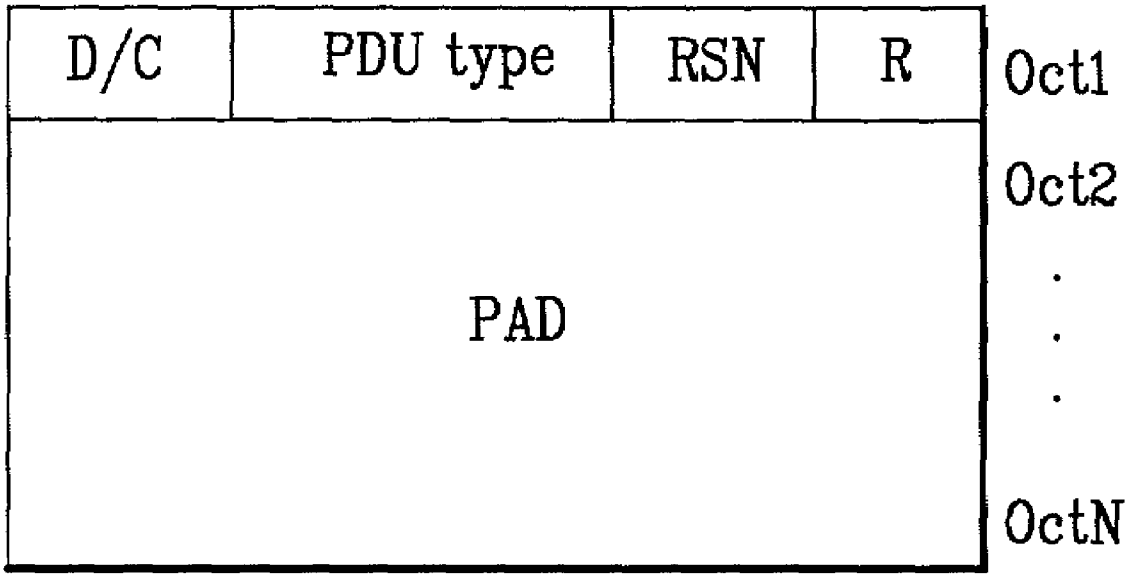

FIG. 5
Related Art

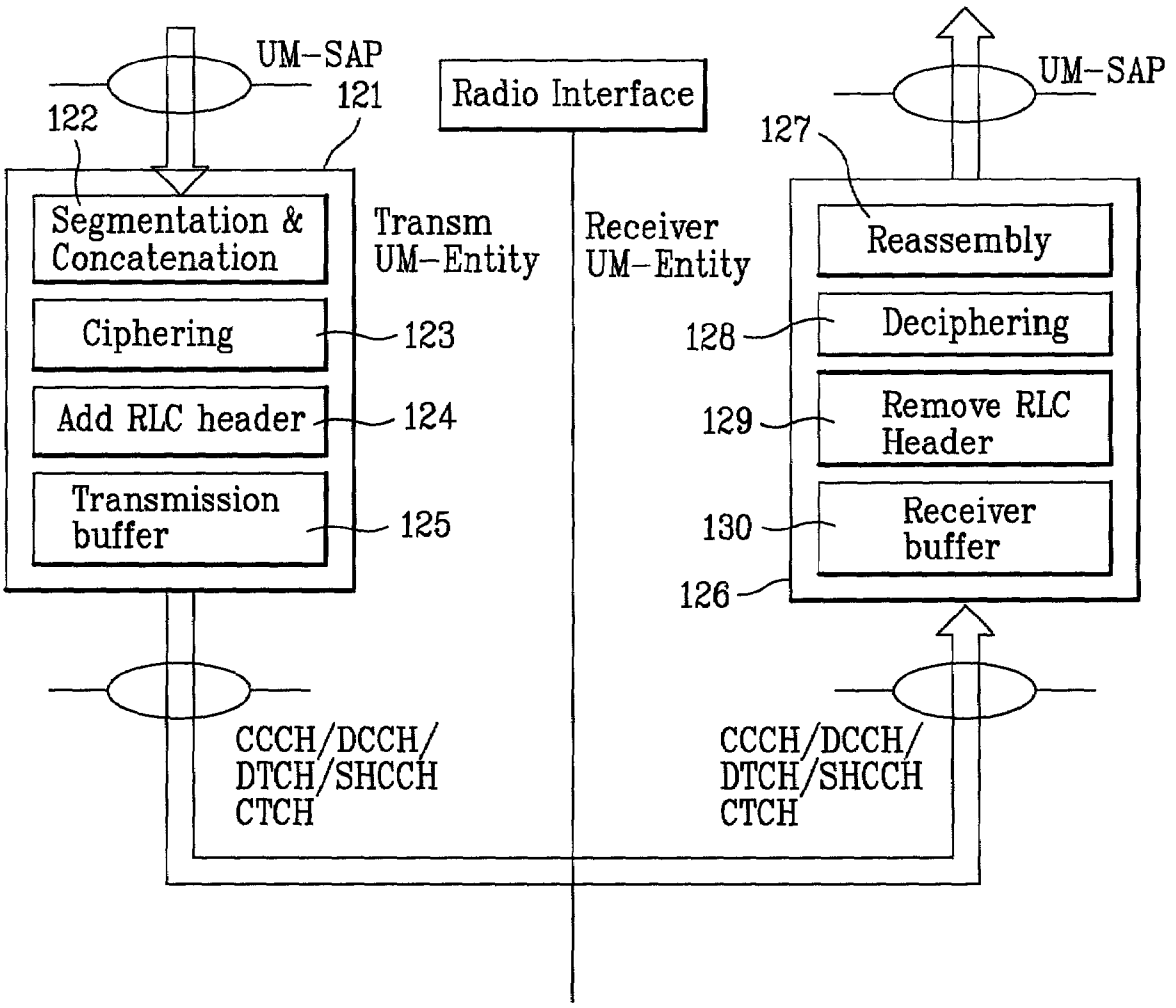

FIG. 6
Related Art

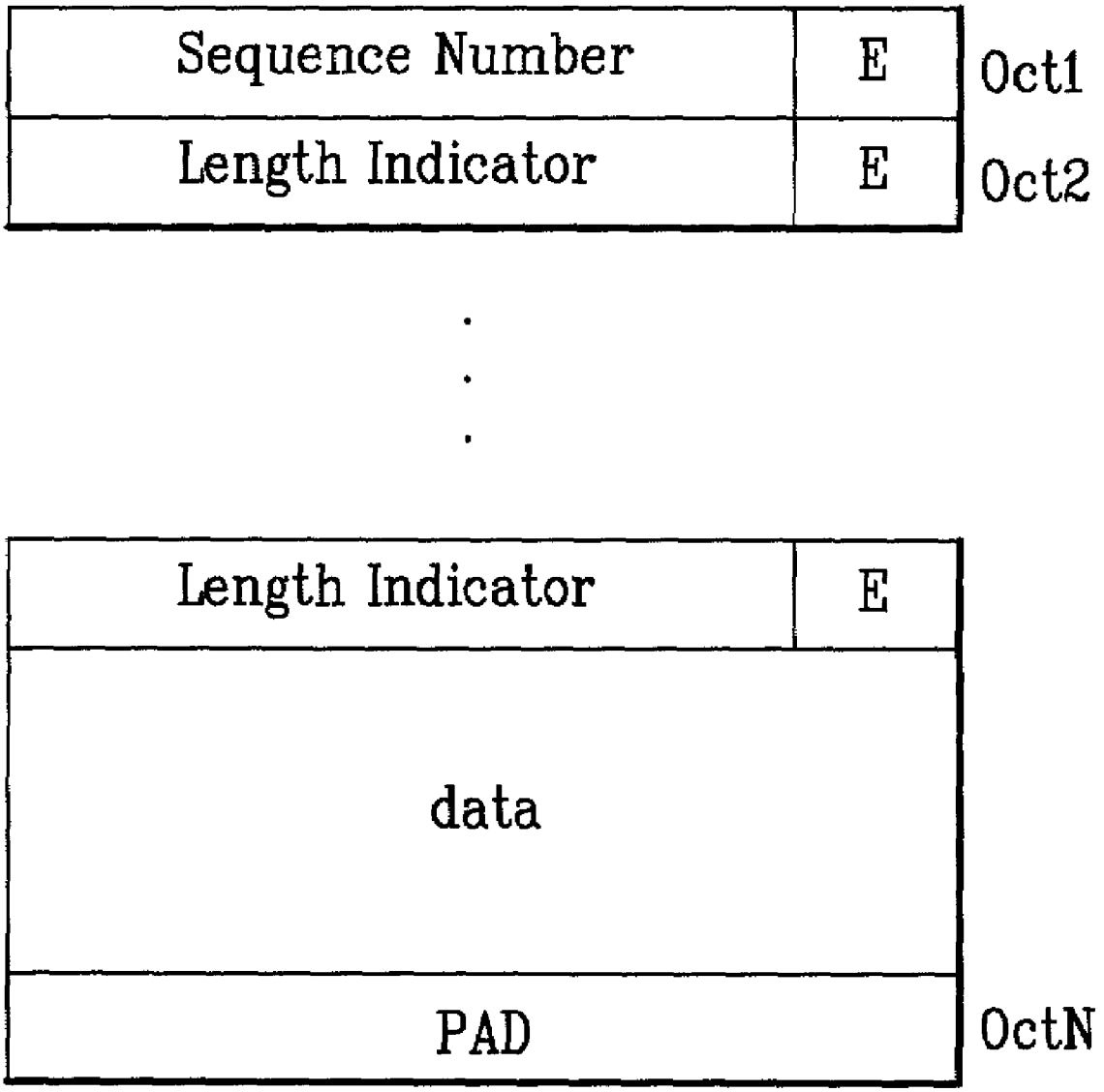

FIG. 7A

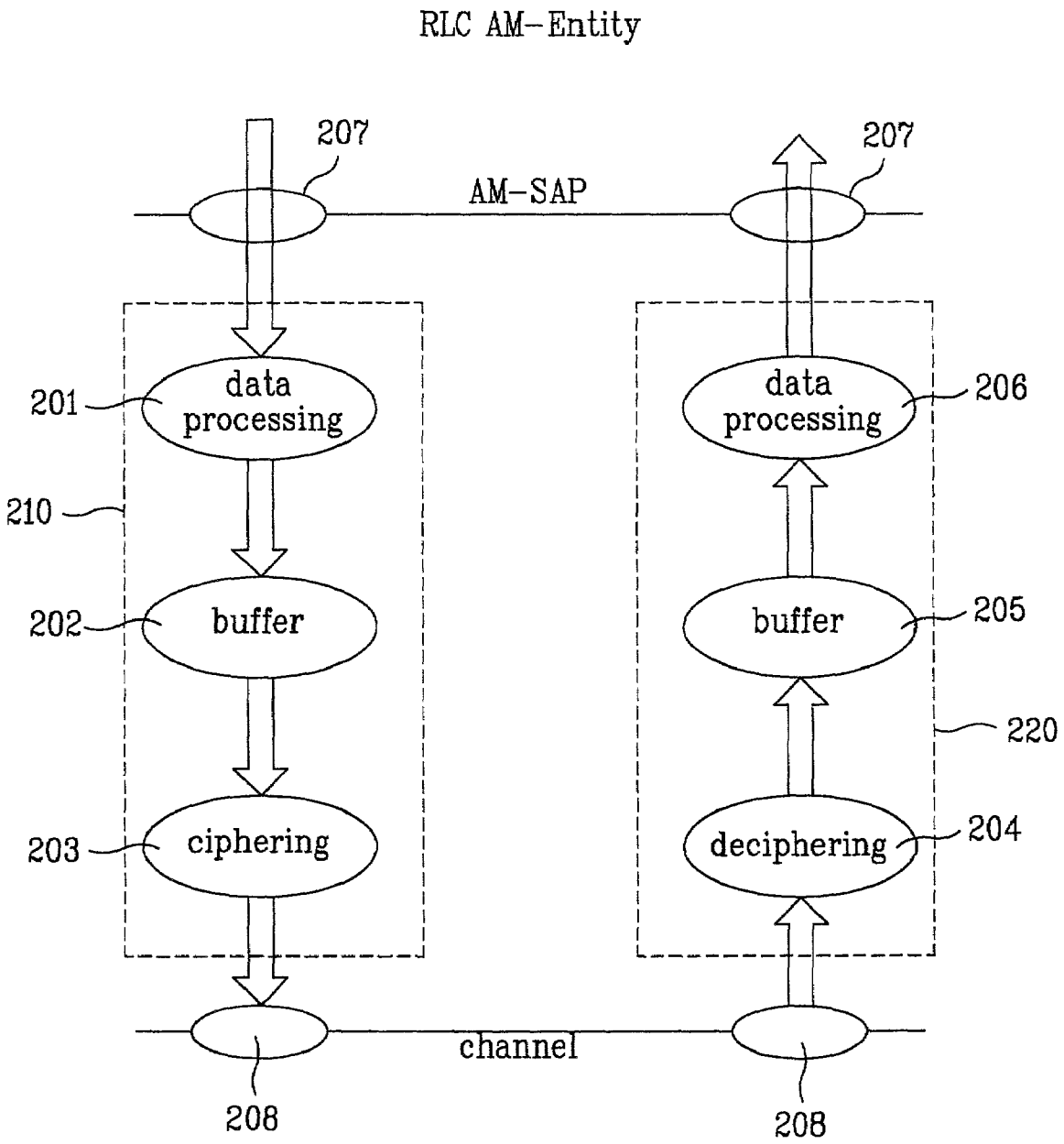
RLC AM-Entity
207
AM-SAP
207
201
data processing
206
data processing
210
202
buffer
205
buffer
220
203
ciphering
204
deciphering
channel
208
208

FIG. 7B

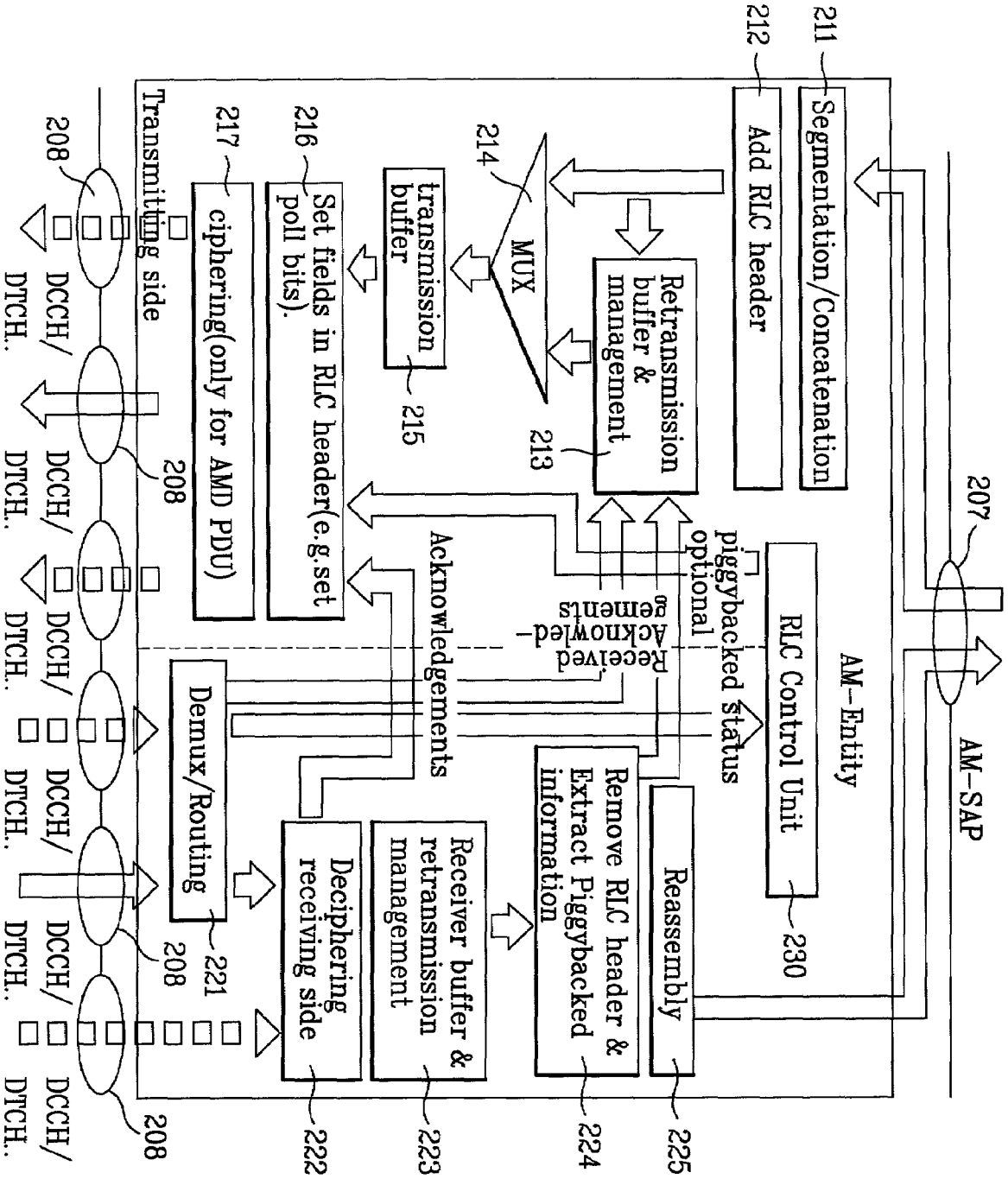
AM-SAP
207
AM-Entity
RLC Control Unit
230
Segmentation/Concatenation
211
Add RLC header
212
Retransmission buffer & management
213
MUX
214
transmission buffer
215
Set fields in RLC header(e.g.set poll bits).
216
ciphering(only for AMD PDU)
217
Transmitting side
208
DCCH/ DTCH..
Reassembly
225
Remove RLC header & Extract Piggybacked information
224
Receiver buffer & retransmission management
223
Deciphering receiving side
222
Demux/Routing
221
Received Acknowledgements
piggybacked status optional
Acknowledgements

FIG. 8A

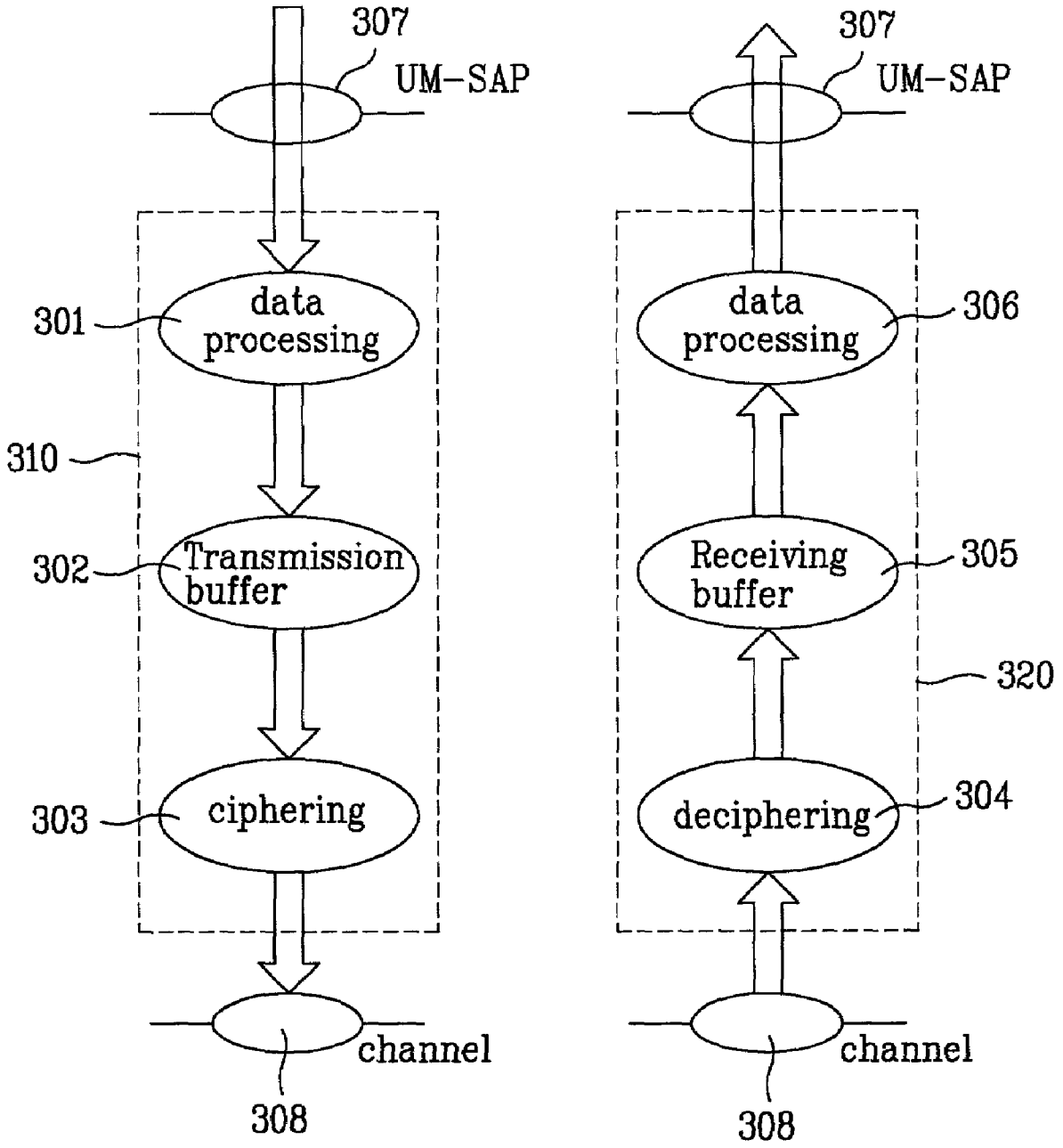
307
UM-SAP
301
data processing
310
302
Transmission buffer
303
ciphering
channel
308
307
UM-SAP
data processing
306
Receiving buffer
305
320
deciphering
304
channel
308

FIG. 8B

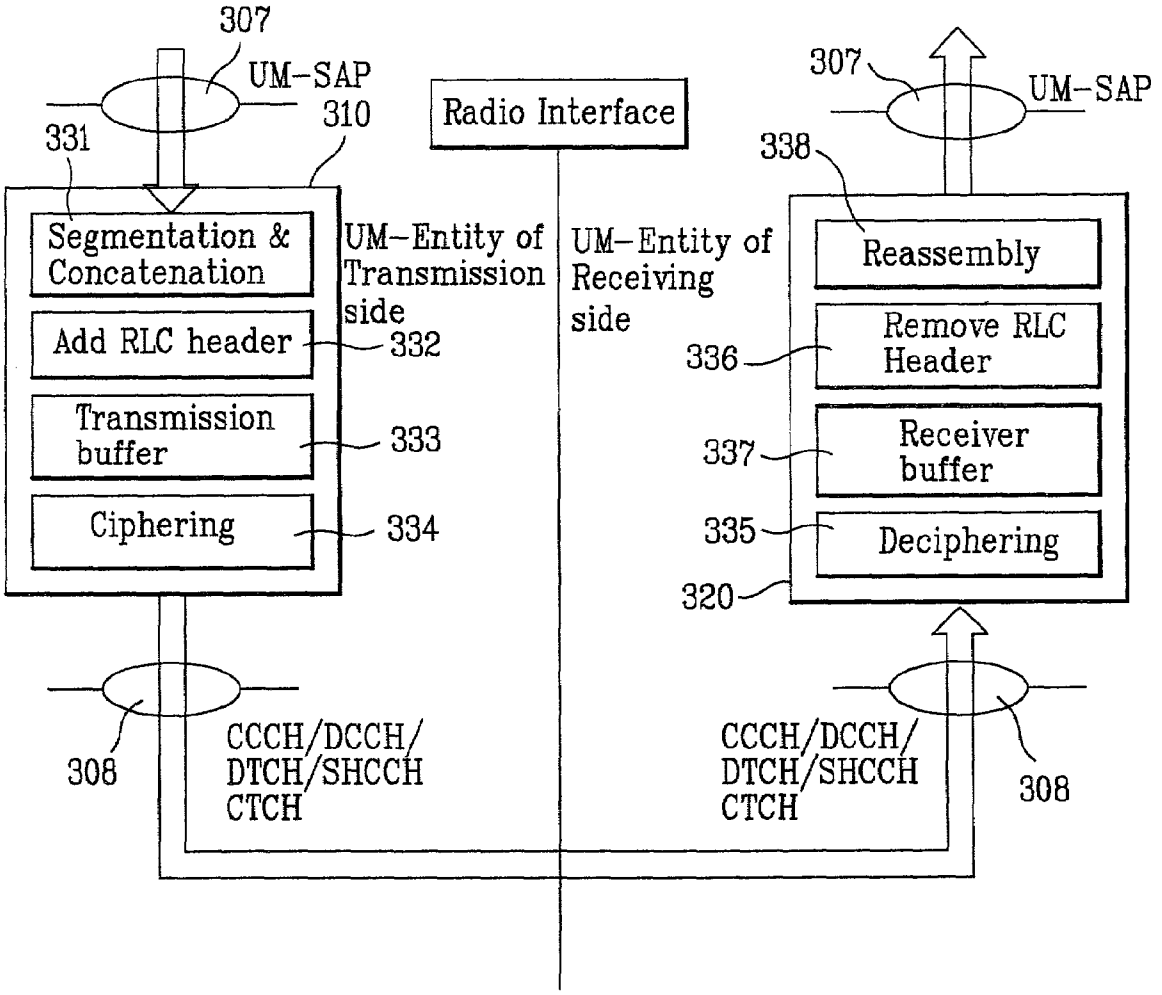
307
UM-SAP
310
331
Radio Interface
Segmentation & Concatenation
UM-Entity of Transmission side
Add RLC header
332
Transmission buffer
333
Ciphering
334
UM-Entity of Receiving side
307
UM-SAP
338
Reassembly
Remove RLC Header
336
Receiver buffer
337
Deciphering
335
320
308
CCCH/DCCH/ DTCH/SHCCH CTCH
CCCH/DCCH/ DTCH/SHCCH CTCH
308

FIG. 8C

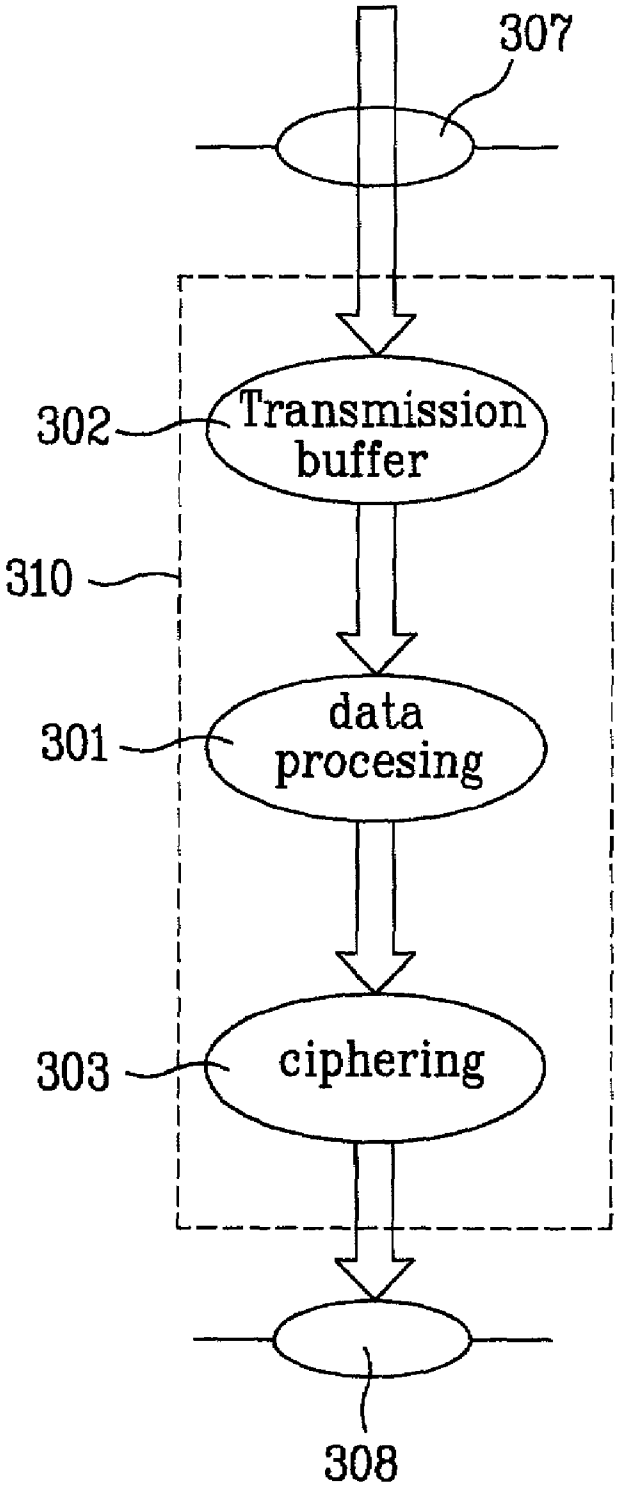
307
302
Transmission buffer
310
301
data procesing
303
ciphering
308

FIG. 8D

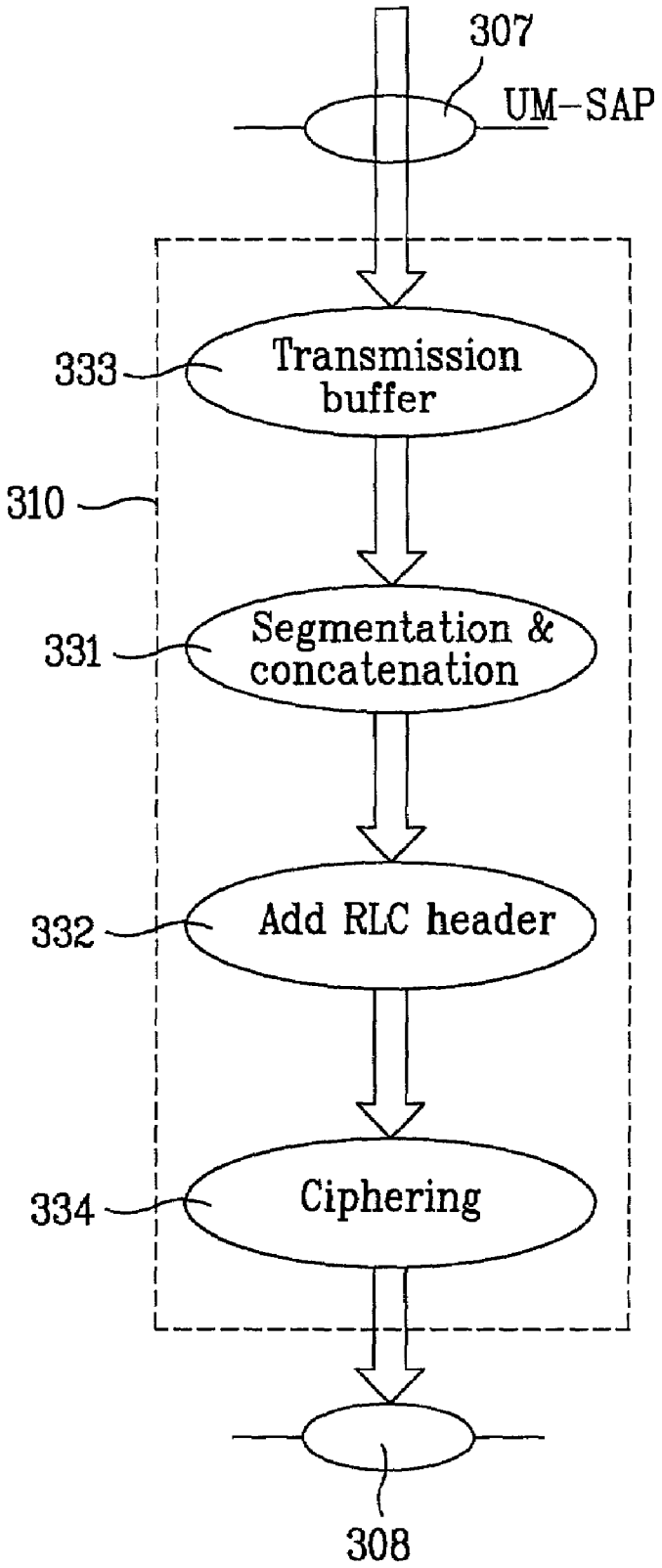
307
UM-SAP
333
Transmission buffer
310
331
Segmentation & concatenation
332
Add RLC header
334
Ciphering
308

RADIO COMMUNICATION SYSTEM AND METHOD HAVING A RADIO LINK CONTROL LAYER

BACKGROUND OF THE INVENTION

1. Field of the Invention

The present invention relates to a radio communication system and method having a radio link control (RLC) layer. More specifically, the invention relates to ciphering the payload data communicated by the radio communication system.

2. Background of the Related Art

Many efforts are being made to develop and study communication technology admitting multimedia access without spatiotemporal limitations. Lately, the development of digital data processing and transmission technology have enabled the realization of a real-time global data communication system, using satellite, wireless, and wire communications. Access to information is freely available regardless of whether the information is voice, still image, or moving picture information. IMT-2000 will be one of the communication technologies supporting multimedia access.

An RLC layer is the second layer of a 3GPP protocol that controls data links and corresponds to the second layer of the 7-layered QSI model. RLC species used in 3GPP are mainly divided into a transparent (Tr) mode specie, to which no RLC header is added, and a non-transparent, (NTR) mode specie, to which an RLC header is added. NTr mode is subdivided into an unacknowledged mode (UM), having no acknowledgment (ACK) signal from a receive stage, and an acknowledged mode (AM), having an ACK signal from the receive stage. Therefore, RLC presently uses three modes, designated as Tr, UM, and AM.

FIG. **1** illustrates a related art block diagram of an RLC AM entity structure. On a transmitting side of the AM entity, segmentation and concatenation are carried out through block **101** to change service data units (SDUs), stepping down from an upper layer, into uniformly sized protocol data units (PDUs). Headers containing sequence numbers (SNs) are added to the PDUs through block **102**.

The PDU to which the header is added is transmitted to a multiplexer (MUX) **104** and stored in a retransmission buffer **103**, for such later use as may arise. The PDU is conveyed by MUX **104** to ciphering block **105** to encrypt it for data security. The encrypted PDU is temporarily stored in a transmission buffer **106**, for later transmission to a field setting block **107**.

In the field setting block **107**, fields such as a DC and poll field, but not the sequence number of the RLC header, are set and then transmitted to a receive side AM entity. Such a PDU carrying data that has been stepped down from an upper layer is called an AM data (AMD) PDU.

FIG. **2** illustrates a structure of an AMD PDU. The AMD PDU is constructed with a header group, a length indicator (LI) group, a data field, and a padding (PAD) or piggybacked status PDU field.

The header group includes: (1) a sequence number field representing the order of the respective AMP PDUs, (2) a 1-bit D/C field indicating whether the corresponding AMD PDU carries data information or control information, (3) a 1-bit polling field (P field) to request a status report from a receiving side, (4) a 2-bit header extension (HE) field identifying whether the next field is a data field or an LI field, and (5) a 1-bit extension (E) field identifying whether the next field is a data field or the LI field followed by an E bit field.

The LI octet contains an LI field and an E bit field, in which the LI field identifies boundaries of the respective SDUs when the PDU includes a plurality of SDUs. Each LI octet represents an octet count from the first octet of the data part to the last octet of the respective SDUs. The respective LIs for the SDUs included in the PDU are called the LI group.

The data field includes at least one SDU stepped down from the upper layer. Since the size of the data field is variable, padding is used to octet-align the sizes of all the PDUs.

When ciphering is performed on the AMD PDU, the first two octets, which are part of the header group, including the sequence number are not ciphered. The rest of the AMD PDU is ciphered.

In the AM entity, both a control PDU and the AMD PDU exist. Varieties of the control PDU include a status PDU carrying status information, a reset PDU resetting the AM entity, and a reset ACK PDU informing the acknowledgment (ACK) of the reset PDU.

FIG. **3** illustrates a structure of a status PDU. FIG. **4** illustrates a structure of a reset ACK PDU. The control PDUs, which are generated from the RLC control unit, are transmitted to the field setting block without undergoing the ciphering. The D/C and PDU type fields are set and then the control PDU is transmitted to the receiving RLC AM entity.

The D/C field is set to 1 for the AMD PDU and set to 0 for the control PDU. When the AMD PDU is not completely filled with data, the remaining space is padded. When there is a PAD in the AMD PDU, the field setting block **107** enables the transmission of a status PDU instead of the PAD, so as to increase the data transmission efficiency. In this case, the status PDU is called a piggybacked status PDU. A demultiplex/routing part **108** checks the D/C field. If the D/C field value is 0, the control PDU is instantly sent upward to the RLC control unit **100**, since a '0' identifies a control PDU. If the D/C field value is 1, the AMD PDU is instantly sent upward to the receiver buffer **109**, since a '1' identifies the AMD PDU.

The RLC AM entity supports one or two logical channels for each radio bearer set-up. In FIG. **1**, solid and dotted lines indicate the cases of using one or two logical channels, respectively. Data and control channels are differentiated when two logical channels are used. Therefore, the AMD PDU is immediately transmitted to the receiver buffer **109** and the control PDU is transmitted to the RLC control unit **100**, via the demultiplex/routing part **108**.

Receiver buffer **109** checks the receiving status of the respective AMD PDUs. If an AMD PDU is not received when expected, the receiver buffer **109** sends a NACK signal to the transmitting side to request a retransmission of the missing AMD PDU. The received PDUs are stored in the receiver buffer **109** until all of the PDUs forming a complete SDU are received. Thereafter, the receiver buffer **109** sends the PDUs to the decipherer **110** as SDU units.

The PDUs are deciphered by a deciphering part **110** and data are extracted only by removing RLC headers and piggybacked information from the respective PDUs, in block **111**. Thus, the SDU is constructed with pure data through block **111**. Subsequently, the SDU is sent upward to an upper layer, through a reassembly part **112**.

Unfortunately, the related art has problems in transmitting the AMD PDU. In order for the transmitting side to transmit the piggybacked status PDU, the field setting block **107** checks whether a PAD exists. When a PAD exists, the piggybacked status PDU replaces the PAD in the AMD PDU. Because the AMD PDU has been ciphered already, the

ciphered AMD PDU has to be deciphered in the field setting block **107** to determine the exact location of the PAD and whether the PAD exists. Moreover, the deciphered AMD PDU should be ciphered before transmitting the AMD PDU. Therefore, the deciphering/ciphering has to be carried out in the field setting block unnecessarily.

The PDUs stored in the receiver buffer **109** have to be deciphered to determines which PDUs belong to each SDU. Therefore, the receiver buffer also needs to be able to decipher the PDU.

The repeated ciphering/deciphering reduces the processing speed and efficiency of the AMD PDU data and further degrades the system performance.

The RLC has an SDU discard function used for preventing the overflow of a buffer. When this function is used, PDUs corresponding to the SDU are discarded from both the transmitting buffer and the receiver buffer. Since all of the ciphered PDUs are stored in the transmitting and receiver buffers, the transmitting and receiver buffers require the deciphering function commonly.

FIG. **5** illustrates a construction of a related art RLC UM entity. Segmentation and concatenation are performed by block **122** to change the SDUs, stepping down from an upper layer through the UM-SAP, into uniformly sized PDUs. Subsequently, a ciphering part **123** ciphers the PDUs for data security. Then, an RLC header part **124** adds headers containing sequence numbers to the PDUs forming an unacknowledged mode data UMD PDU. A transmission buffer **125** stores and transmits the UMD PDU to a receiving side.

The UMD PDU is used when an ACK signal to the transmitting side from the receiving side is not necessary. An AMD PDU is used when the ACK signal is necessary.

As shown in FIG. **6**, the UMD PDU is constructed with a header group, an LI group, a data field, and a PAD field. The header group includes a sequence number field representing the order of the respective PDUs. The header group also has 1-bit extension (E) field indicating whether the next field is the data field or the LI field followed by an extension bit field.

The data field includes at least one SDU stepped down from the upper layer. Since the size of the data field is variable, padding is performed to octet-align the sizes of all the PDUs.

In the same manner as the AMD PDU, the LI group in the UMD PDU is constructed with an LI field and an E bit field. The LI field identifies the boundaries of the respective SDUs, when the PDU includes a plurality of SDUs. Each LI represents an octet count from the first octet of the data field to the last octet of the respective SDUs. The respective LIs for the SDUs included in the PDU are called the LI group.

The first octet is the header and is not ciphered. The rest of the UMD PDU is ciphered.

Referring again to FIG. **5**, the RLC UM entity stores the transmitted UMD PDU in the receiver buffer **130**. When all of the PDUs forming a complete SDU are received, the stored PDUs are transmitted to block **129** by the respective SDU units. Thereafter, the headers of the PDUs are removed in block **129** and the PDUs are deciphered by a deciphering part **128**. The deciphered PDUs are transmitted to an upper layer through a reassembly part **127**.

Unfortunately, the related art has problems in transmitting the UMD PDU using the RLC UM entity. Because the PDUs are encrypted before being conveyed to the receiver buffer **130**, deciphering has to be performed by the receiver buffer to determine which PDU belongs to which SDU. Therefore, the receiver buffer needs a deciphering function.

The RLC has an SDU discard function used for preventing the overflow of a buffer. When this function is used, PDUs corresponding to the SDU are discarded from both the transmitting and receiver buffers. Since all of the ciphered PDUs are stored in the transmitting and receiver buffers, the transmitting and receiver buffers require the deciphering function commonly.

SUMMARY OF THE INVENTION

Accordingly, the invention is intended to solve at least the above problems and/or disadvantages and to provide at least the advantages described hereinafter.

An object of the present invention is to provide a radio communication system having an RLC layer enabling the system to perform the transmission and reception of PDUs more effectively.

Another object of the present invention is to provide a data processing method in a radio communication system having an RLC layer enabling the system to process PDUs faster in an RLC entity.

A data transmission module of a radio communication system having an RLC entity, according to the present invention, performs ciphering as a final processing step after a transmission buffer. And, a data receiving module of a radio communication system having the RLC entity carries out deciphering as a first processing step before a receiver buffer. An RLC entity according to the present invention includes an RLC AM entity and an RLC UM entity.

To achieve these objects and other advantages and in accordance with the purpose of the invention, as embodied and broadly described herein, a data transmission module according to the present invention includes a transmission data storing module storing PDUs corresponding to SDUs transmitted from a first upper layer and outputting the stored PDUs by SDU unit, a ciphering module ciphering the PDUs stored in the transmission data storing module and transmitting the ciphered PDUs to a second RLC entity, a deciphering module deciphering ciphered PDUs transmitted from a first RLC entity, and a received data storing module storing the deciphered PDUs and outputting the PDUs toward a second upper layer by SDU unit.

In another aspect of the present invention, in an RLC entity having a transmission buffer, a data processing method in the RLC entity includes storing SDUs stepping down from a first upper layer in the transmission buffer in PDUs, ciphering the PDUs stored in the transmission buffer, and transmitting the ciphered PDUs to a second RLC entity corresponding to a receiving side.

In another aspect of the present invention, in an RLC entity having a receiver buffer, a data processing method in the RLC entity includes receiving and deciphering PDUs received from a first RLC entity corresponding to a transmitting side, storing the deciphered PDUs in the receiver buffer, and reassembling the PDUs stored in the receiver buffer and then transmitting the reassembled data to a second upper layer.

Additional advantages, objects, and features of the invention will be set forth in part in the description which follows and in part will become apparent to those having ordinary skill in the art upon examination of the following or may be learned from practice of the invention. The objects and advantages of the invention may be realized and attained as particularly pointed out in the appended claims.

BRIEF DESCRIPTION OF THE DRAWINGS

The invention will be described in detail with reference to the following drawings in which like reference numerals refer to like elements wherein:

FIG. **1** illustrates a related art block diagram of a radio communication system having an RLC AM entity;

FIG. **2** illustrates a structure of an AMD PDU;

FIG. **3** illustrates a structure of a status PDU;

FIG. **4** illustrates a structure of a reset ACK PDU;

FIG. **5** illustrates a related art construction of a radio communication system having an RLC UM entity;

FIG. **6** illustrates a structure of a UMD PDU;

FIG. **7**A illustrates a construction of a radio communication system having an RLC AM entity, according to a first preferred embodiment of the present invention;

FIG. **7**B illustrates the block diagram of FIG. **7**A in greater detail;

FIG. **8**A illustrates a construction of a radio communication system having an RLC UM entity, according to a second preferred embodiment of the present invention;

FIG. **8**B illustrates the block diagram of FIG. **8**A in greater detail;

FIG. **8**C illustrates a block diagram of another application of FIG. **8**A; and

FIG. **8**D illustrates the block diagram of FIG. **8**C in greater detail.

DETAILED DESCRIPTION OF PREFERRED EMBODIMENTS

Reference will now be made in detail to the preferred embodiments of the present invention, examples of which are illustrated in the accompanying drawings.

In a data transmission device of a radio communication system having an RLC layer, according to the main feature of the present invention, a transmission data reassembling module reassembles service data units (SDUs) received from an upper layer into protocol data units (PDUs). A header adding module then adds headers of the RLC layer to the PDUs. After that, a transmission data storing module stores the PDUs to which the headers are added. A ciphering module ciphers the PDUs to which the headers are added and then transmits the ciphered PDUs to a lower layer.

In a data receiving device of a radio communication system having an RLC layer, according to the main feature of the present invention, a deciphering module deciphers ciphered PDUs of an RLC layer transmitted from a transmitting side through a lower layer. A received data storing module then stores the deciphered PDUs. An RLC header removing module removes headers of the RLC layer from the PDUs. A reassembly module reassembles the PDUs outputted from the RLC header removing module in service data units (SDUs) and then transmits them to an upper layer.

FIG. **7**A illustrates a construction of an RLC AM entity according to a first preferred embodiment of the present invention and FIG. **7**B illustrates the block diagram of FIG. **7**A in greater detail. The RLC AM entity of the first preferred embodiment is mainly constructed with a transmission module **210**, a receiving module **220**, and an RLC control module **230**. Transmission module **210** is constructed with a first data processing module **201**, which converts SDUs transmitted from an upper layer through AM-SAP **207** into PDUs; a transmission data storage module (or transmission buffer) **202** storing the AMD PDUs; and a ciphering module **203**. Ciphering module **203** formats the PDUs stored in the transmission buffer **202** into predetermined fields, under the control of the RLC control module **230**, and ciphers the PDUs. The ciphered PDUs are transmitted to an RLC AM entity corresponding to a receiving side, through channels DCCH and DTCH.

The receiving module **220** of the RLC AM entity is constructed with a deciphering module **204**, which transmits control PDUs and deciphers AMD PDUs; a received data storage module (or receiver buffer) **205** that stores the deciphered AMD PDUs; and a second data processing module **206**. The second data processing module **206** reassembles the AMD PDUs stored in the received data storage module **205** into SDU units and then transmits the AMD PDUs to the upper layer, through the AM-SAP **207**.

Preferably, the transmission buffer **202** in the RLC AM entity processes the data by SDU unit. Ciphering module **203** checks a D/C field before the PDUs are ciphered. The D/C field check distinguishes the AMD PDUs, which are to be ciphered, from the control PDUs, which are not to be ciphered. If the AMD PDU includes a piggybacked status PDU, the piggybacked status PDU is ciphered but the status PDU is transmitted without being ciphered. The receiver buffet **205** also processes the data by SDU unit.

FIG. **7**B illustrates the block diagram of FIG. **7**A in greater detail. Transmission module **210** of the RLC AM entity is constructed with a segmentation/concatenation module **211**, which performs segmentation and concatenation on SDUs stepped down from an upper layer; an RLC header module **212** forming PDUs by adding sequence numbers to the segmented and concatenated SDUs; a retransmission buffer/management module **213** storing the header-added PDUs for retransmission and management; a multiplexer (or multiplexing module) **214** outputting one of output signals of the RLC header module **212** and the retransmission buffer/management module **213**; a transmission buffer (or storage module) **215** storing the unciphered PDUs outputted from the multiplexer **214**; a set fields block (or set fields module) **216**, which sets a D/C field and other fields in the PDU; and a ciphering module **217**, which ciphers the PDUs outputted from the set fields block **216** and transmits the ciphered PDUs to the receiving side.

Preferably, the ciphering module **217** checks the D/C field header of the AMD PDU before ciphering. Control PDUs are not ciphered, but the AMD PDU including any piggybacked status PDU is ciphered. Also, ciphering module **217** checks the AMD PDUs for a PAD so that the PAD may be replaced by a piggybacked status PDU.

Receiving module **220** of the RLC AM entity is constructed with a demultiplexing/routing module **221**, which transmits the control PDUs received from transmission module **210** of another entity to the RLC control unit **230** and transmits AMD PDUs to a deciphering block **222**; a deciphering module **222** that deciphers the AMD PDUs; a receiver buffer **223** that stores the deciphered AMD PDUs and outputs the stored PDUs as SDU units; a header/piggybacked information removal module **224** that removes the RLC headers and piggybacked information from the PDUs received by the SDU unit; and a reassembly module **225** that reassembles the SDUs constructed with pure data and then transmits them to the upper layer.

Preferably, the demultiplex/routing module **221** of the receiving module **220** checks whether the transmitted PDUs are control PDUs or AMD PDUs, through an examination of the D/C field. Receiver buffer **223** transmits the stored PDUs to the upper layer in the form of SDU units.

The first embodiment of the present invention introduces a new RLC AM entity that overcomes the ciphering/deciphering problems of the related art.

In the RLC AM entity structure, transmission module **210** performs the ciphering step in a final stage, positioned after the set fields block. Receiving module **220** of the entity performs the deciphering step in an initial stage positioned before the receiver buffer.

The steps of processing the AMD PDU in the RLC AM entity according to the first embodiment of the present invention will now be explained in detail. One logical channel or two may be applied to the RLC AM entity. When two logical channels are applied, a UTRAN indicates that the first logical channel is used for data PDUs and the second logical channel is used for control PDUs.

If the instruction is not provided by the UTRAN, both the data and control PDUs may be sent through one of the two channels and the identification of the logical channel mapping is signaled by RRC.

SDUs stepped downward from the upper layers are segmented and concatenated, through the segmentation/concatenation module **211**, into PDUs having fixed lengths. The length of the PDU is determined by the radio bearer reassembly and a semi-static value, which may be changed through the bearer reassembly by the RRC. Subsequently, the SDUs are conveyed to the RLC header module **212**, where headers including sequence numbers are added to the SDUs to form PDUs. The PDUs to which the headers are added are immediately transmitted to the multiplexer **214** and simultaneously stored in the retransmission buffer/management module **213**. For the purpose of concatenation and padding, the information bits of the length indicator and extension are inserted into the initial part of the PDU.

Multiplexer **214** outputs PDUs from either the RLC header module **212** or the retransmission buffer/management module **213**. The multiplexer **214** determines which PDUs are selected and when the PDUs will be transmitted to the MAC. The PDUs are provided the RLC PDU headers and PDU padding is replaced by the piggybacked status information. PDUs transmitted through the multiplexer **214** are stored in the transmission buffer **215** in an unciphered state. From the transmission buffer **215**, the PDUs are transmitted to the set fields block **216**. In the set fields block **216**, the D/C field and other fields are set as necessary and the AMD PDU is replaced by the piggybacked status PDU, if a PAD exists in the AMD PDU.

Ciphering module **217** ciphers the AMD PDUs outputted from the set fields block **216** and transmits the ciphered AMD PDUs toward receiving RLC AM entity.

Before the ciphering is performed, the header D/C fields of the AMD PDUs are checked. In accordance with the value of the D/C field, ciphering is performed on the AMD PDUs, including the piggybacked status PDU. Ciphering is not carried out on the control PDUs, such as the status, reset, and reset acknowledgment PDUs (reset ACK PDU).

When the piggybacked mechanism is applied, the padding is replaced by control information so as to increase the transmission efficiency and enable faster message exchange between the peer entities. The piggybacked control information is not saved by a retransmission buffer. Piggybacked control information is included in the piggybacked status PDU, which is subsequently included in the AMD PDU. The piggybacked status PDUs have variable sizes so as to be matched with an available amount of free space in the AMD PDU.

Retransmission buffer **213** receives acknowledgment signals from the receiving side, controls the retransmission of PDUs, and determines when a PDU is deleted from the retransmission buffer **213**.

The receiving module receives the AMD PDUs through one of the logical channels, from the MAC sub-layer. The RLC PDUs are differentiated and potential piggybacked status information is extracted. The PDUs are stored in the receiver buffer **205** until a complete SDU is received. Receiver buffer **205** may request a retransmission of a PDU by sending negative acknowledgment signal (NACK) to the peer entity.

Demultiplex/routing module **221** of the receiving module **220** judges whether the received PDUs are control PDUs or AMD PDUs, by examining the D/C field. The demultiplex/routing module **221** transmits the received PDUs, to the RLC control module **230**, if they are control PDUs, or to the deciphering module **222**, if they are AMD PDUs.

Deciphered AMD PDUs are stored in the receiver buffer/retransmission management module **223**. Receiver buffer/retransmission management module **223** transmits the received PDUs to the upper module in the form of SDU units.

The header and piggybacked information removal module **224** forms SDUs of pure data, by removing the RLC headers and piggybacked information from the received PDUs. After the headers are removed from the PDUs and the PDUs are reassembled into one SDU, the SDUs are transmitted to the upper layer. Reassembly module **225** reassembles the PDUs constructed with the pure data into the SDUs and then transmits the SDUs to the upper layer through the AM-SAP **207**.

Meanwhile, the acknowledgment signals for the received PDUs are passed to the transmission module of the transmitting side.

As mentioned in the above description, the ciphering of PDUs is performed in the final stage of the transmitting module and the PDUs are deciphered in the initial stage of the receiving module. Therefore, the PDUs are stored in the transmission and receiver buffers in an unciphered state. Thus, the transmission and receiver buffers need no deciphering function. Consequently, the PDU processing time in the RLC layers is reduced, since the transmission buffer, set fields block, and receiver buffer require ciphering and deciphering capability.

Moreover, the piggybacked status PDUs are processed with ease in the present invention.

Since PDUs are stored in the receiver buffer in an unciphered state, other functions of the RLC may be performed directly on the SDU unit. Therefore, the data processing speed in the RLC is increased and the AM entity operates in a more stable manner.

Furthermore, the AMD PDUs, but not the control PDUs are ciphered, thereby reducing the processing time of the PDUs.

An RLC unacknowledged mode (UM) entity and its operation according to a second embodiment of the present invention will not be explained. FIG. **8**A illustrates a construction of an RLC UM entity according to a second embodiment of the present invention and FIG. **8**B illustrates the block diagram of FIG. **8**A in greater detail. The RLC UM entity shown in FIG. **8**A and FIG. **8**B is characterized in that a transmitting module performs the ciphering step after a transmission buffer and a receiving module performs the deciphering step before a receiver buffer.

A transmitting module **310** of the RLC UM entity in FIG. **8**A is constructed with a first data processing module **301**, which converts SDUs stepped down from an upper layer into transmittable PDUs; a transmission data storing module (or transmission buffer) **302** storing the PDUs; and a ciphering module **303** that ciphers the PDUs stored in the trans-

mission data storing module **305** and transmits the ciphered PDUs to a receiving RLC UM entity.

A receiving module **320** of the RLC UM entity in FIG. **8**A is constructed with a deciphering module **304**, which deciphers the PDUs transmitted from the transmitting RLC UM entity; a received data storing module (or receiver buffer) **305** that stores the deciphered PDUs; and a second data processing module **306** that transmits the PDUs stored in the received data storing module **305** to the upper layer, through UM-SAP **307**, in the form of SDU units.

Signal processing module **301** forms the SDUs stepped down from the upper layer into PDUs and adds headers to the PDUs. The transmission buffer **302** stores the UMD PDU and the ciphering module **303** ciphers the UMD PDU stored in the transmission buffer. The transmission buffer processes data by the SDU unit. The ciphered UMD PDU is transmitted to the receiving side of another UM entity through channels such as the CCCH, DCCH, DTCH, SHCCH, and CTCH. In this case, the RLC entity transfers the UMD PDUs to MAC through the channels. The channels CCCH and SHCCH are used for the UM only on a downlink. What channels are used depends on whether the upper layer is located on a control plane or a user plane.

If the upper layer is located on the control plane, the channels CCCH, DCCH, and SHCCH are used. If the upper layer is located on the user plane, the channels CTCH and DTCH are used.

When the ciphered UMD PDU is received from the transmitting UM entity through one of the logical channels, the deciphering part **304** deciphers the received UMD PDU and the receiver buffer **308** stores the deciphered UMD PDU.

An RLC header removing part **336** removes the RLC header from the UMD PDU stored in the receiver buffer **305**. A reassembling part **338** reassembles the UMD PDU outputted from the RLC header removing part **309** into RLC SDUs and then transmits the reassembled UMD SDUs to the upper layer through the UM-SAP **307**.

The receiver buffer **305** of the RLC UM entity processes data by the SDU unit also.

Referring now to FIG. **8**B, the transmitting module **310** of the RLC AM entity is constructed with a segmentation/concatenation module **331**, which performs segmentation and concatenation on the SDUs transmitted from the upper layer through the UM-SAP **307**; an RLC header module **332**, which forms PDUs by adding sequence numbers to the segmented data; a transmission data storing module (or transmission buffer) **333** that stores the PDUs; and a ciphering module **334**, which ciphers the PDUs stored in the transmission data storing module **333** and transmits them to the receiving RLC UM entity. The segmentation/concatenation module **331** and the RLC header module **332** in FIG. **8**B are equivalent to the first data processing module **301** in FIG. **8**A.

Receiving module **320** is constructed with a deciphering module **335**, which deciphers the PDUs transmitted from the transmitting RLC UM entity; a received data storing module (or receiver buffer) **337** that stores the deciphered PDUs; an RLC header removing module **336** that removes the RLC headers from the PDUs; and a reassembly module **338**, which forms the SDUs. The SDUs are formed by reassembling the PDUs outputted from the RLC header removing module **337**. After the SDUs are formed they are transmitted to the upper layer through the UM-SAP **307**. The RLC header removing module **336** and the reassembling module **338**, in FIG. **8**B, are equivalent to the second data processing module **306** in FIG. **8**A.

The steps of transmitting and receiving the UMD PDU, in the RLC UM entity, according to the second embodiment of the present invention will now be explained. The SDUs transmitted from the upper layer through the UM-SAP **307** are segmented and concatenated in the segmentation/concatenation module **331** and then provided to the add RLC header module **332**. The add RLC header module **332** forms the PDUs by adding headers, including sequence numbers, to the segment data received from the segmentation/concatenation module **331**. Transmission buffer **333** stores the PDUs and then outputs them in the form of PDU units. Ciphering module **334** ciphers the PDUs stored in the transmission buffer **333** and transmits the ciphered PDUs to the receiving side RLC UM entity.

The deciphering module **335** of the receiving side RLC UM entity deciphers the PDUs transmitted through the channels. Receiver buffer **337** stores the deciphered PDUs. Then, the receiver buffer **337** provides the PDUs, in the form of SDU units, to the RLC header removing module **336**, which removes the headers from the PDUs. The reassembling module **338** forms the SDUs, by reassembling the PDUs outputted from the RLC header removing module **336**, and then transmits them to the upper layer.

FIG. **8**C illustrates a block diagram of another application of the RLC UM entity. The order of the first data processing module **301** and the transmission data storing module **302** are reversed from the order shown in FIG. **8**A. The transmitting module **310** of the RLC UM entity includes a received data storing module **302**, which stores SDUs stepped down from the upper layer; a first data processing module **301**, which converts the SDUs stored in the received data storing module into UMD PDUs; and a ciphering module, which ciphers the UMD PDUs stored in the transmission data storing module **302** and then transmits them to the receiving RLC UM entity.

FIG. **8**D is a detailed block diagram of FIG. **8**C. The data transmission module **310** includes a transmission data storage module **333** for storing service data units from an upper layer, a segmentation and concatenation module **331** that acts as a transmission data reassembly module for reassembling protocol data units of the RLC layer, an RLC header module **332** for adding headers of the RLC layer to the PDUs reassembled by the segmentation and concatenation module **331**, and a ciphering module **334** that ciphers the header-added PDUs and transmits the ciphered PDUs to a lower layer.

The construction of FIG. **8**B is identical to that of **8**D except that the serial ordering of the transmission data module **333** and the segmentation and concatenation module **331** are reversed. Therefore, the detailed description of **8**D will be skipped. The construction of a receiving module **320** is equal to that of FIG. **8**A, of which an explanation may be found above.

Regarding FIG. **8**C, as is the case in FIG. **8**A, the SDUs are transmitted to the transmitting module through the UM-SAP **307** from the upper layer. Ciphered PDUs are transmitted toward the receiving RLC entity through the channels DTCH, DCCH, CCCH, SHCCH, and CTCH by the transmitting module. The ciphered PDUs enter the receiving module through the channels DTCH, DCCH, CCCH, SHCCH, and CTCH and the PDUs outputted from the second data processing module are transmitted to the upper layer through the UM-SAP. Also, the first data processing module includes a segmentation/concatenation module **331** carrying out segmentation and concatenation on the SDUs transmitted from the upper layer, through the UM-SAP **307**,

and an RLC header module **332** forming PDUs by adding sequence numbers to the segmented data.

In the RLC UM entity according to the second embodiment of the present invention, the ciphering and deciphering steps are arranged so that the unciphered SDUs are stored in the transmission buffer **333** and the unciphered PDUs are stored in the receiver buffer **336**.

Since the transmission buffer **333** and the receiver buffer **336** store unciphered data, they need no deciphering capability.

Accordingly, the RLC UM entity according to the second embodiment of the present invention has the following advantages. First, the ciphering step is arranged as the final processing step in the transmitting module of the entity and the deciphering step is arranged as the initial processing step in the receiving module, thereby enabling the RLC entity to transmit and receive PDUs more efficiently. Second, the already-deciphered PDUs are stored in the receiver buffer, thereby enabling the receiving RLC entity to transmit UMD PDUs to the upper layer more effectively and faster. Third, the transmission and receiver buffers require no deciphering function, thereby enabling the RLC entity to reduce the data processing time spent on other RLC functions, such as the SDU discard function.

The foregoing embodiments and advantages are merely exemplary and are not to be construed as limiting the present invention. The present teaching can be readily applied to other types of apparatuses. The description of the present invention is intended to be illustrative, and not to limit the scope of the claims. Many alternatives, modifications, and variations will be apparent to those skilled in the art. In the claims, means-plus-function clauses are intended to cover the structures described herein as performing the recited function and not only structural equivalents but also equivalent structures.

What is claimed is:

1. A receiving device of a radio communication system having a radio link control (RLC) layer, comprising:

a deciphering module that deciphers ciphered protocol data units (PDUs) of the RLC layer received from a lower layer of the receiving device through at least one of a plurality of channels;

a receiving buffer that stores the deciphered PDUs;

a header removing module that removes headers from the deciphered PDUs; and

a reassembly module that reassembles the deciphered PDUs outputted from the header removing module into service data units (SDUs) and then transmits the SDUs to an upper layer through an access point.

2. The receiving device of claim **1**, wherein the at least one of the plurality of channels is at least one of DTCH, DOCH, CCCH, or SHCCH, the ciphered PDUs are received from a transmitting side and the access point is a UM-SAP.

3. The receiving device of claim **1**, wherein the headers include sequence numbers (SN) representing order numbers of the PDUs.

4. The receiving device of claim **1**, further comprising a data retransmission management module that controls retransmission of ciphered PDUs to the data receiving device.

5. The receiving device of claim **4**, wherein the at least one of the plurality of channels is at least one of DCCH or DTCH, and the access point is an AM-SAP.

6. The receiving device of claim **5**, wherein the deciphering module includes a deciphering block and a demultiplex/routing block that transmits control PDUs received from the lower layer to an RLC control module and transmits data PDUs to the deciphering block.

7. The receiving device of claim **6**, wherein the demultiplex/routing block checks a D/C field within the PDUs to determine whether the PDUs are control PDUs or data PDUs.

8. The receiving device of claim **7**, wherein the header removing module extracts piggybacked information from the data PDUs.

9. The receiving device of a radio communication system of claim **1**, wherein each ciphered PDU comprises a header and data and the header includes a sequence number and an optional length indicator.

10. The receiving device of a radio communication system of claim **9**, wherein the sequence number is not ciphered and the data and the optional length indicator are ciphered.

11. The receiving device of a radio communication system of claim **1**, further comprising a data retransmission module for controlling retransmission of data related to the PDUs to which the headers stored in the receiving buffer are added.

12. A method for receiving data in a radio communication system having a radio link control (RLC) layer, comprising:

deciphering ciphered protocol data units (PDUs) of the RLC layer received from a lower layer through at least one of a plurality of channels;

storing the deciphered PDUs in a receiving buffer as PDUs;

removing headers from the PDUs;

reassembling the PDUs, from which the headers are removed, into service data units (SDUs); and

transmitting the reassembled SDUs to an upper layer through an access point.

13. The method of claim **12**, wherein the at least one of the plurality of channels is at least one of DTCH, DOCH, CCCH, SHCCH, or CTCH, the ciphered PDUs are sent from a transmitting side, and the access point is an UM-SAP.

14. The method of claim **12**, further comprising reading the removed headers.

15. The method of claim **14**, wherein the deciphering step includes transmitting control PDUs to an RLC control module and deciphering only data PDUs.

16. The method of claim **12**, wherein at least one of the plurality of channels is at least one of DCCH or DTCH, and the access point is an AM-SAP.

17. The method of claim **12**, wherein each ciphered PDU comprises a header and data and the header includes a sequence number and an optional length indicator.

18. The method of claim **17**, wherein the sequence number is not ciphered and the data and the optional length indicator are ciphered.

* * * * *