J. H. HOGAN.

VENDING MACHINE.

APPLICATION FILED MAY 10, 1913.

1,133,143.

Patented Mar. 23, 1915.

2 SHEETS—SHEET 1.

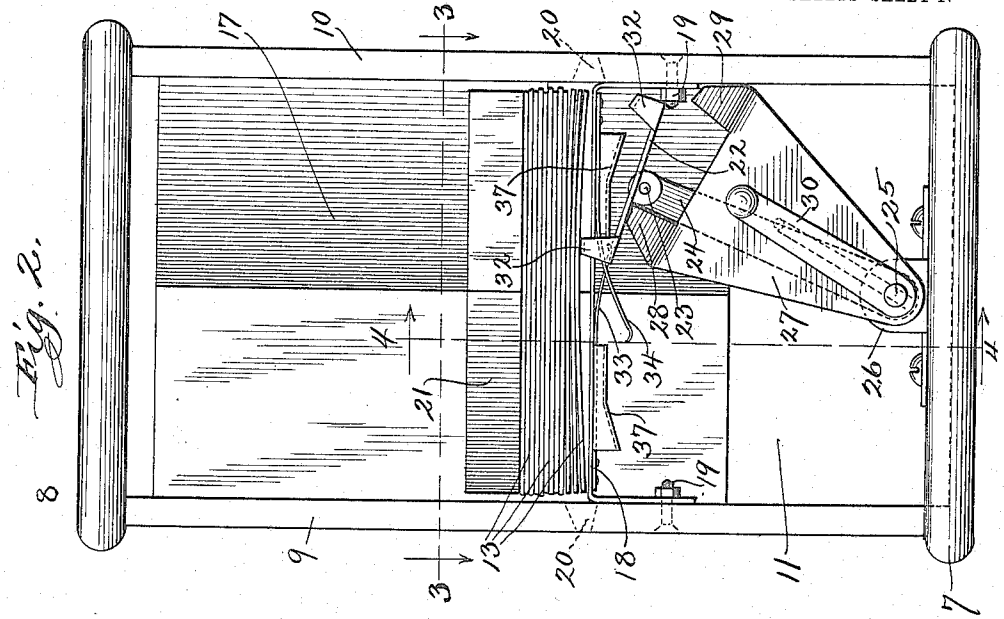

Fig. 2.

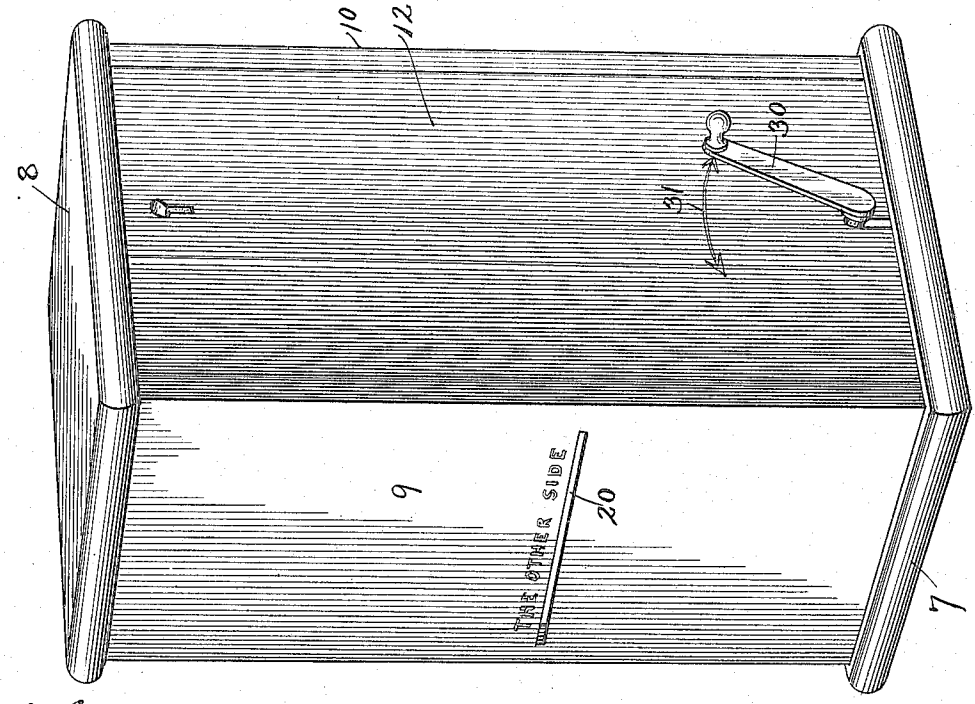

Fig. 1.

Witnesses:
R. J. Jacker
F. C. Berggren.

Inventor:
Joseph Hanni Hogan

THE NORRIS PETERS CO., PHOTO-LITHO., WASHINGTON, D. C.

J. H. HOGAN.

VENDING MACHINE.

APPLICATION FILED MAY 10, 1913.

1,133,143.

Patented Mar. 23, 1915.

2 SHEETS—SHEET 2.

Fig. 4.

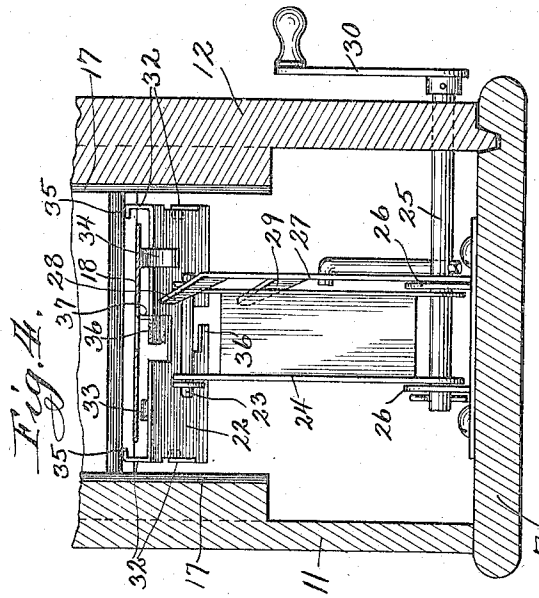

Fig. 6.

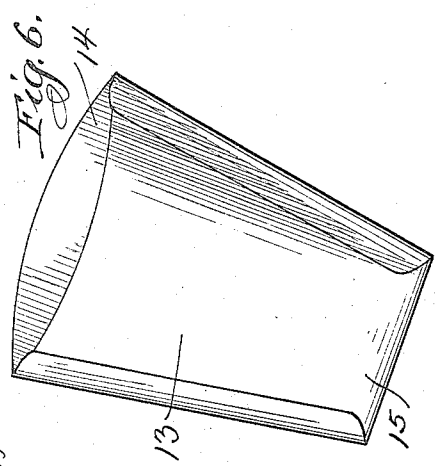

Fig. 3.

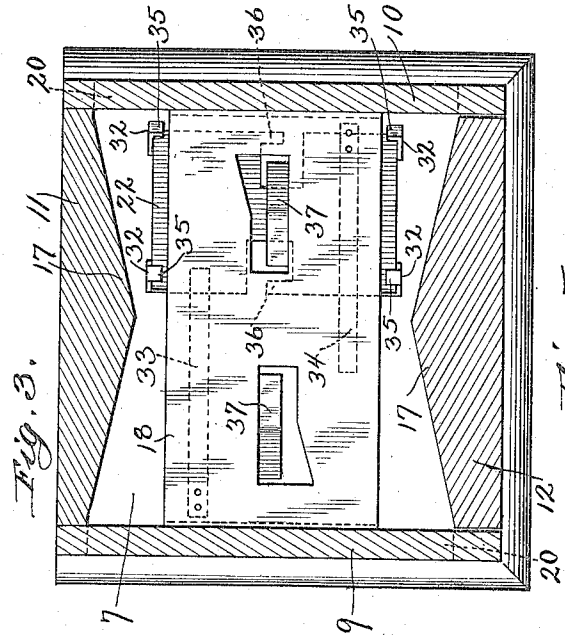

Fig. 5.

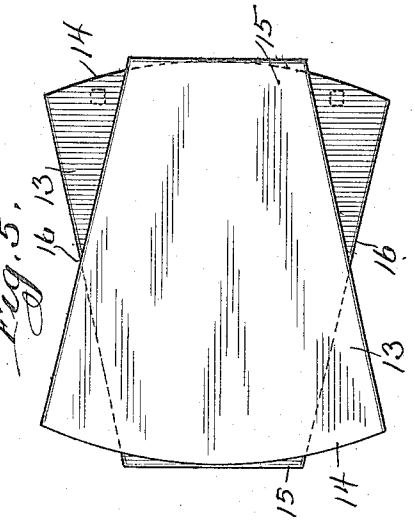

Witnesses:
R. J. Jacka
F. E. Berggren.

Inventor:
Joseph Hawe Hogan

THE NORRIS PETERS CO., PHOTO-LITHO., WASHINGTON, D. C.

UNITED STATES PATENT OFFICE.

JOSEPH HARRIE HOGAN, OF CHICAGO, ILLINOIS.

VENDING-MACHINE.

1,133,143. Specification of Letters Patent. Patented Mar. 23, 1915.

Application filed May 10, 1913. Serial No. 766,908.

To all whom it may concern:

Be it known that I, JOSEPH HARRIE HOGAN, a citizen of the United States, residing at Chicago, in the county of Cook and State of Illinois, have invented a new and useful Vending-Machine, of which the following is a specification.

My invention relates to vending machines which vend one article at each operation of a handle and the objects of my improvements are first, to deliver the articles alternately out on opposite sides of the case; second, to provide a pusher or ejecting frame which is automatically tilted at each operation; third, to make a cheap simple and durable device and other features to become apparent from the description to follow.

This invention is particularly designed to vend paper drinking cups in their folded condition but of course can be adapted to vend any other kind of goods. The paper drinking cups if left in the open on a shelf or other suitable resting place, the thoughtless public will use some of the cups and then replace them among the unused cups, which is the undesirable thing to do. By the use of my invention no used cup can possible be replaced among the unused cups and to secure a cup from the supply of unused ones a handle or lever must be operated. The machine comprises a closed case in which the cups are stored and which case is provided with horizontal slots on two opposite sides through which the cups are ejected.

To describe my invention so that others versed in the art to which it pertains can make and use the same, I have illustrated it on the accompanying two sheets of drawings forming a part of this specification, in which:—

Figure 1, is a perspective view of a machine embodying my invention; Fig. 2, is a front elevation of the same with the front cover removed; Fig. 3, is a horizontal section on a line 3—3 of Fig. 2; Fig. 4, is a vertical cross section on line 4—4 of Fig. 2; Fig. 5, is an inverted plan view of a pile of paper drinking cups arranged in proper position to be placed into the machine and Fig. 6, is a perspective view of one of the paper drinking cups removed from the machine.

Similar reference characters refer to similar parts throughout the several views.

The mechanism is rigidly mounted within a suitable case comprising the bottom 7, the top 8, the sides 9 and 10, the back 11 and the front removable cover 12. The upper part of the case is used for storage room and the vending mechanism is located in the lower part of the case. The paper drinking cups 13 which are vended by the machine as clearly shown in Figs. 5 and 6, are made tapering from a wide top end 14 to a narrow bottom end 15. When the cups 13 are placed into the machine they are arranged with the wide top ends 14 alternately on opposite sides as seen in Fig. 5, to form the angular gutters 16 on two opposite sides of the vertical pile of paper cups. The upper part of the case is made so that the pile of cups 13 fit snugly but loosely therein. To prevent the cups in the pile from shifting out of place the back 11 and the front cover 12 are provided with angular ridges 17 to fit into the gutters 16 of the pile of cups.

When the cups are in proper position in the machine they rest on the sheet metal support 18 secured by bolts 19 to the sides 9 and 10. The sides 9 and 10 are provided with slots 20 arranged in the same horizontal plane with the top of the support 18 through which the cups 13 are delivered. A block of wood 21 or other suitable weight is placed on top of the pile of cups 13 to insure their gravitating uniformly and evenly onto the support 18.

The mechanism for ejecting the cups is all located below the support 18 and comprises the tilting pusher plate 22 pivoted at 23 to the upper end of the arm 24 pivotally mounted at its lower end on the shaft 25 mounted in the bearings 26 secured to the bottom 7. The arm 24 is arranged to be swung from one side to the other and back again by means of the plate 27 which is rigidly secured to shaft 25 and has its two upwardly extending prongs 28 and 29 bent to lie in the path of the arm 24. The shaft 25 has one end extending through a suitable slot in the lower edge of the cover 12 to the exterior of the case where it is provided with a suitable handle 30. The cover 12 may be provided with a suitable mark 31 in the form of a double pointed arrow to indicate in what direction the handle 30 should be moved. The position of the parts in Fig. 2, indicate that the last cup has been ejected through slot 20 on the right hand side of the machine, and the next movement of the handle 30 must be from its right hand position to its left hand position. When the handle 30 is moved from its right hand po-

sition as shown in Fig. 2, to its left hand position, the shaft 25 will be rocked, and carry the free end of the plate 27 to the left as viewed in Fig. 2.

The prongs 28 and 29 on plate 27 are spaced apart so that there is considerable lost movement between the plate 27 and the arm 24, and when the free end of plate 27 is moved to the left as above described the arm 24 will not be moved until the prong 29 engages it. Thus when the handle 30 is moved from its right hand position to its left hand position, the free end of the plate 27 will move to the left and move the arm 24 to the left. The left hand positions of the handle 30, the free end of plate 27 and the free end of arm 24 are substantially the same distance to the left of a vertical line drawn through the shaft 25 as said parts are to the right of such vertical line when in their right hand position as seen in Fig. 2. Since the upper free end of the arm 24 carries the pivoted tilting pusher plate 22, said pusher plate is of course also moved from right to left, and left to right by means of the handle 30. Said pusher plate 22 is provided with two upward extending fingers 32 at either end remote from the pivot 23 which are arranged to project above the plane of the top surface of the support 18. However, the two fingers at one end of the plate 22 are always below the level of the support 18 when the two fingers at the other end of plate 22 are above said plane of the support 18. The tilting of the pusher plate 22 about its pivot 23 determines which two fingers 32 lie in a plane above the support 18. When the pusher plate 22 is moved to the left it is tilted to have its right hand end higher than its left hand end, and when it is moved to the right it is tilted to have its left hand end higher than its right hand end. Thus it will be seen that it is always the rear fingers 32 which are above the level of the support 18 when the pusher plate 22 is moved. To tilt the pusher plate 22 in the proper position at the proper time, I provide two leaf springs 33 and 34 secured to the under side of the support 18 to have their free ends pressing downward on the tilting pusher plate 22. The springs 33 and 34 are so arranged that they are always in contact with the plate 22. While one spring only may be employed I prefer to provide two, and these are arranged as clearly shown in Fig. 3, to cause a constant downward pressure in the center of the device directly above the shaft 25.

The prongs 28 and 29 are made of such length that one or the other will act as a stop for the tilting of the pusher plate 22 about its pivot during a portion of each operation depending of course in which direction the plate 22 is being pressed by the springs 33 and 34, which pressure changes from one side of the pivot 23 to the other side of the same each time said pivot 23 moves from one side to the other of a vertical line drawn through shaft 25. As seen in Fig. 2, the prong 28 is serving to stop the tilting of the plate 22 about its pivot 23 under pressure of the springs 33 and 34, and when the free end of the plate 27 is moved to the left a sufficient distance to bring the prong 28 away from under plate 22 the said plate 22 will be tilted by the pressure of the springs 33 and 34 and come to a stop in the position indicated by dotted lines in Fig. 2, thus reversing the inclination of the plate 22.

By the mechanism thus far described it will be clear that the first part of the operation of the handle 30 will reverse the inclination of the pusher plate 22 and the balance of said operation will move the said plate 22 to the opposite side of the machine. When the plate 22 is tilted by the first operation of handle 30 the fingers 32 on the high end of said plate 22 will be pressed upward against the next to the lowermost cup 13 in the pile substantially in the position indicated by the dotted lines in Fig. 5, straddling the narrow end of the lowermost cup 13, and when the plate 22 is moved by the further operation of handle 30 the fingers 32 will engage the wider portion of the lowermost cup 13 and push said cup partly out of the case through slot 20 so that the cup can easily be removed from the case by grasping the protruding end of the cup. Both sides of the machine are made identical for operating the handle 30 in either direction.

To prevent the fingers 32 from accidentally becoming disengaged from the lowermost cup 13 while pushing it along, I prefer to provide each finger with an overhanging portion 35 at its extremity, best seen in Figs. 3 and 4. To insure the proper tilted position of the pusher plate 22 throughout the major portion of its movement from side to side, I provide a lug 36 on each free end of said plate 22 to coöperate with suitable cam tracks 37 provided on the support 18. The cam tracks are arranged one on either side of a vertical line drawn through the shaft 25 so that, as viewed in Fig. 2, the lug 36 on the right hand end of plate 22 will always coöperate with the cam track on the right hand side of the support 18 and the lug on the left hand end of the plate 22 will always coöperate with the cam track on the right hand side of the support 18. When the handle 30 is operated the plate 22 is first tilted and then moved to the opposite side of the machine as above described, and in thus moving toward the opposite side its lug 36 will slide along on top of its coöperating cam track and hold the plate 22 in the desired tilted position with the fingers 32

above the support 18 to engage and push the lowermost cup partly out through the slot 20.

It will be understood that the parts may be materially modified without in the least departing from the scope of my invention.

Having thus fully described my invention what I claim as new and desire to secure by Letters Patent of the United States is:—

1. In a device of the class described, a suitable rectangular case for storing paper cups in a vertical pile arranged with a vertical gutter on two opposite sides of the pile, the inner faces of two opposite walls of the case formed with suitable ridges to fit into the vertical gutters of the pile of cups to retain the cups in proper position in the pile, the remaining two opposite walls of the case provided with suitable slots through which the cups are ejected and means at the lower end of the pile of cups for ejecting cups through said slots alternately.

2. In a device of the class described, a suitable case for storing tapering paper cups in a vertical pile having their wide and narrow ends arranged alternately throughout the pile, means at the lower end of the pile of cups for extracting one cup at a time comprising a support for the pile of cups, a pusher provided with two upward extending fingers spaced apart to straddle the narrow end of the lowermost cup and arranged to move from side to side below the pile of cups and means for operating said pusher whereby a cup is ejected from the pile at each side movement of the pusher.

3. In a device of the class described, means for retaining tapering paper cups in a vertical pile and arranged with their narrow and wide ends alternating throughout the pile, means for extracting one cup from the pile at each operation comprising a pusher provided with two laterally extending fingers spaced apart to straddle the narrow ends of the cups and mounted to move back and forth in a plane at right angles to the axis of the pile of cups with the fingers contacting with the cup next to the end one and means for moving said pusher to extract the end cup.

4. In a device of the class described, means for ejecting a paper cup comprising a rock shaft, an arm loosely mounted to swing about the shaft as a pivot a tilting pusher pivotally mounted on the free end of said arm and a second arm or plate mounted rigidly on said rock shaft having lost motion with respect to said first named arm and arranged to move said first named arm about its pivot.

5. In a device of the class described, means for retaining tapering paper cups in a vertical pile said cups arranged with their narrow and wide ends alternating throughout the pile, means for extracting the lowermost cup from the pile at each operation comprising a pusher provided with two upwardly extending fingers spaced apart to straddle the narrow ends of the cups and mounted to move back and forth in a horizontal plane below the pile of cups, means for yieldingly holding the said fingers upwardly against the lower end of the pile of cups and means for moving said pusher to extract the lowermost cup.

In testimony whereof I have signed my name to this specification in presence of two subscribing witnesses this 24th day of April, 1913, at Chicago, Illinois.

JOSEPH HARRIE HOGAN.

Witnesses:
R. J. JACKER,
F. E. BERGGREN.

Copies of this patent may be obtained for five cents each, by addressing the "Commissioner of Patents, Washington, D. C."