US 20020143383A1

(19) **United States**

(12) **Patent Application Publication** (10) **Pub. No.: US 2002/0143383 A1**

Parodi (43) **Pub. Date: Oct. 3, 2002**

(54) **INTRODUCER FOR DEPLOYMENT OF BRANCHED PROSTHESIS**

(76) Inventor: **Juan Carlos Parodi**, Buenos Aires (AR)

Correspondence Address:
RATNER & PRESTIA
Suite 301
One Westlakes, Berwyn
P.O. Box 980
Valley Forge, PA 19482-0980 (US)

(21) Appl. No.: **10/052,197**

(22) Filed: **Jan. 18, 2002**

Related U.S. Application Data

(60) Provisional application No. 60/262,787, filed on Jan. 19, 2001.

Publication Classification

(51) **Int. Cl.**[7] **A61F 2/06**

(52) **U.S. Cl.** **623/1.11**

(57) **ABSTRACT**

An introducer for implanting a prosthesis in a junction of a main lumen and a branch lumen. The prosthesis comprises a trunk to be implanted within the main lumen and at least one arm to be implanted within the branch lumen. The introducer comprises an outer sheath, an axial guide wire and at least one peripheral guide wire slideable within the outer sheath, and a nose cone at a distal end of the sheath. The nose cone has an axial conduit for receiving the axial guide wire and at least one peripheral channel for guiding the peripheral guide wire and guiding it into the branch lumen. A unitary branched prosthesis having at least one radial arm may be deployed using this introducer. Methods for deploying a unitary or modular branched prosthesis at a junction in a lumen use the introducer of this invention.

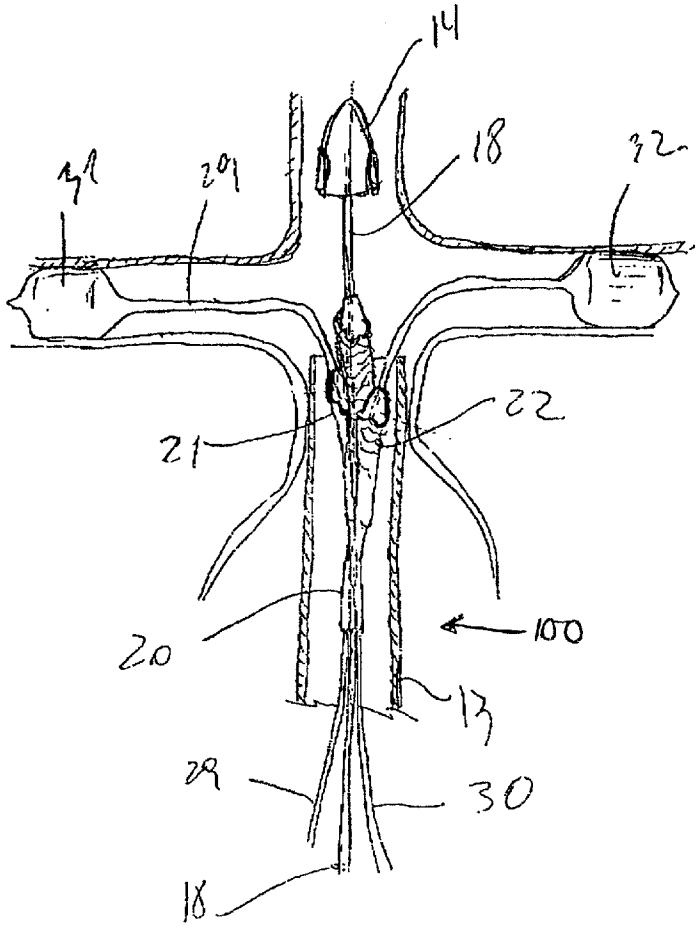

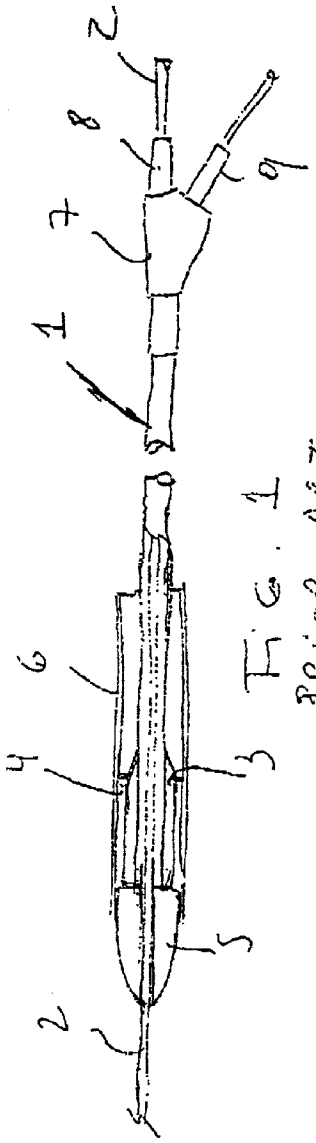

Fig. 1
PRIOR ART

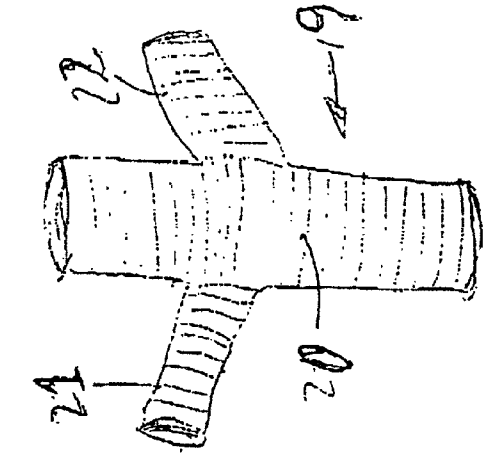

Fig. 5

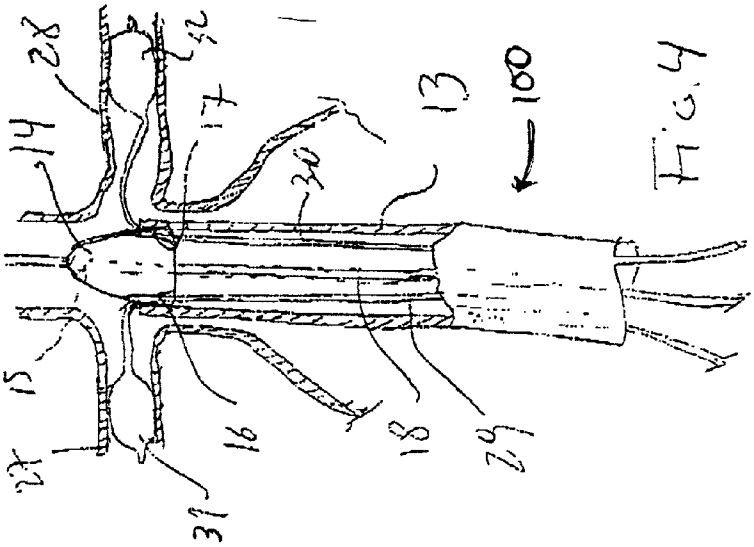

Fig. 4

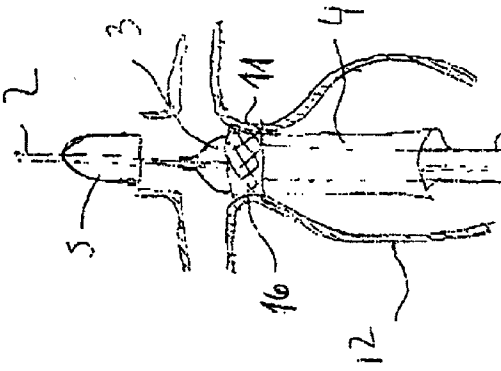

Fig. 2
PRIOR ART

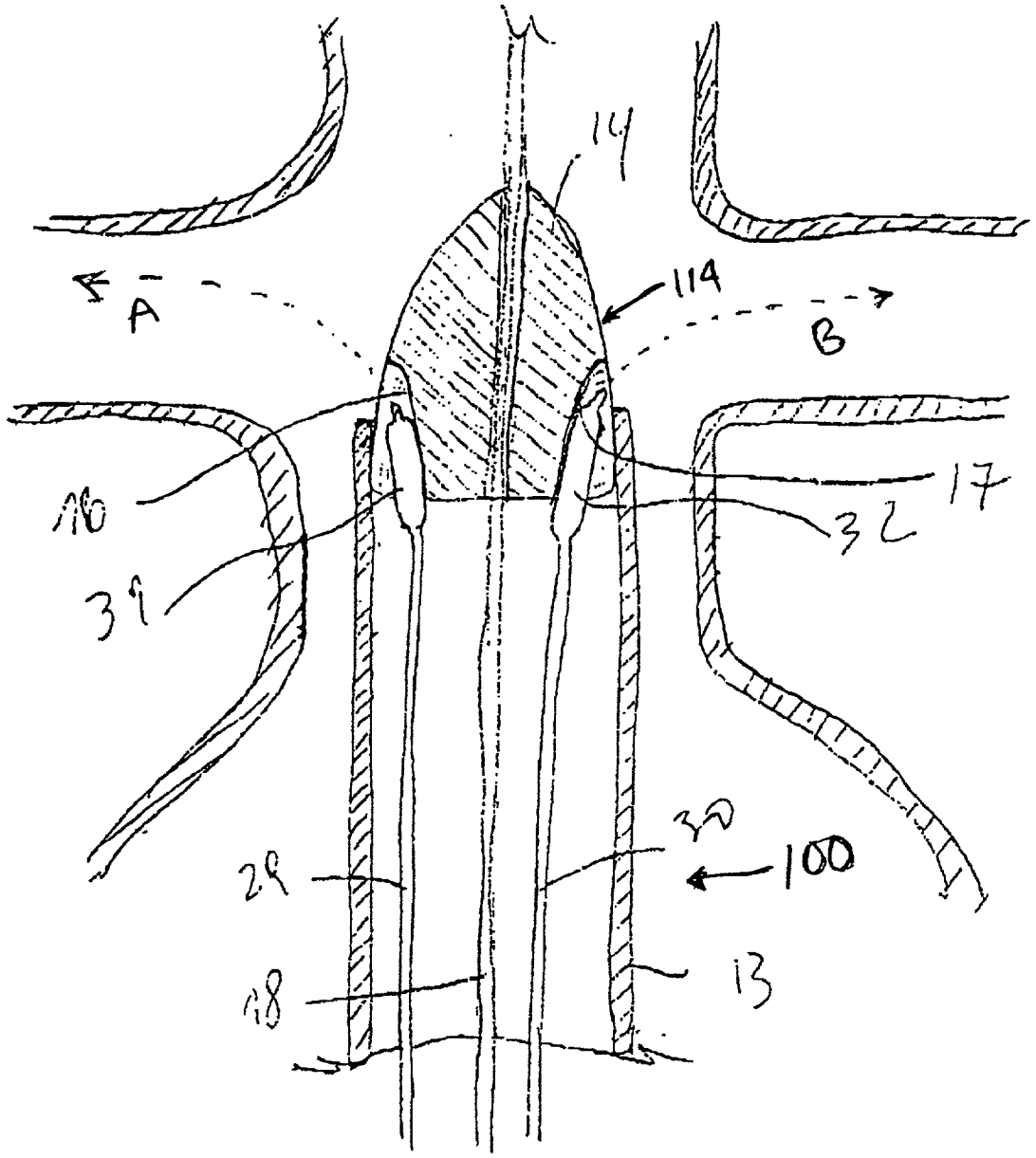

FIG. 3

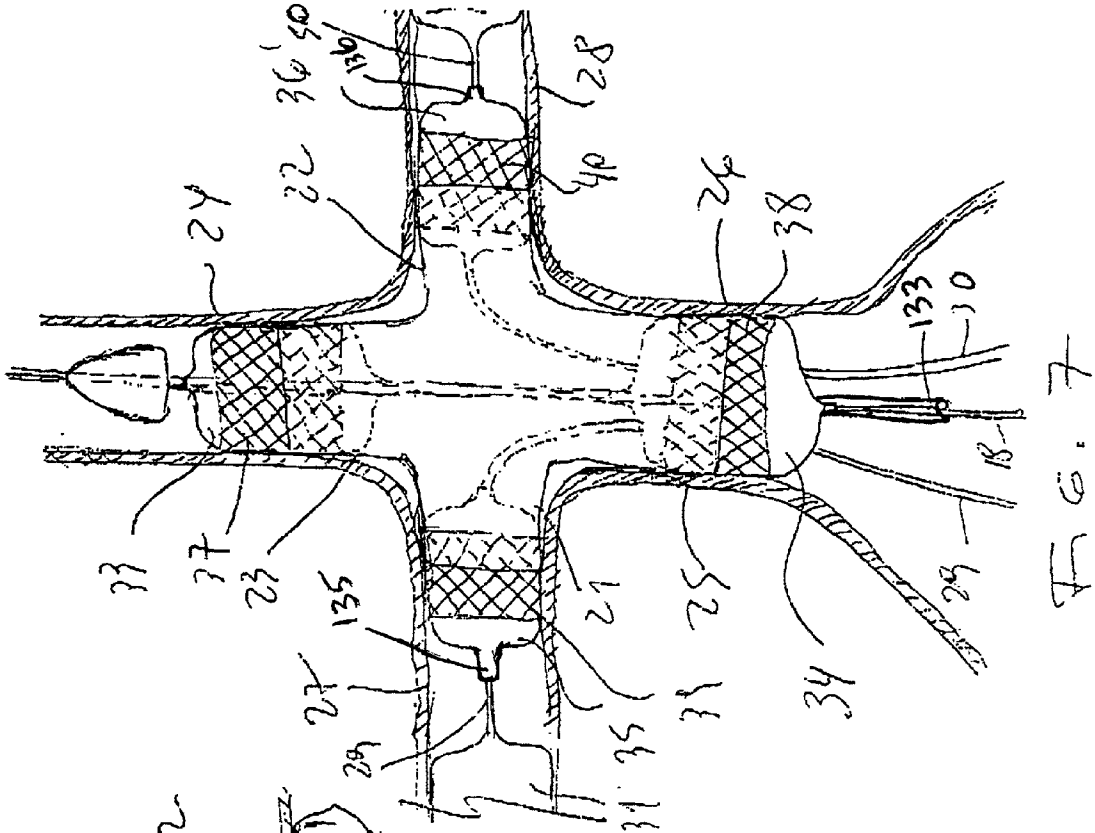
24
22
36
136
28
40
26
38
133
30
18
33
37
23
135
27
29
21
25
34
29
35
31

FIG. 7

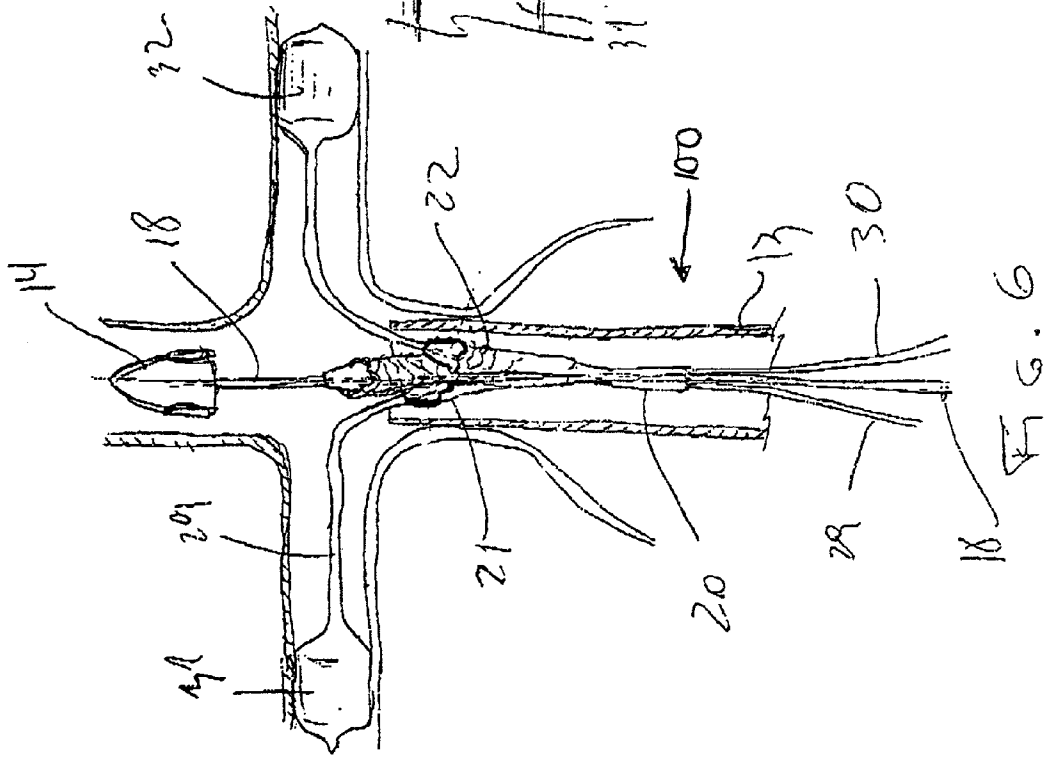
32
14
18
22
100
13
30
21
20
29
18
29
14

FIG. 6

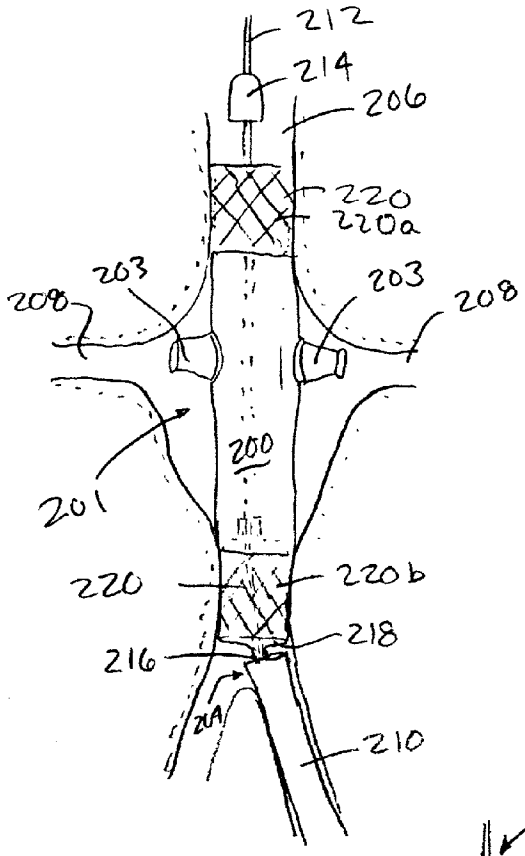

FIG. 8A

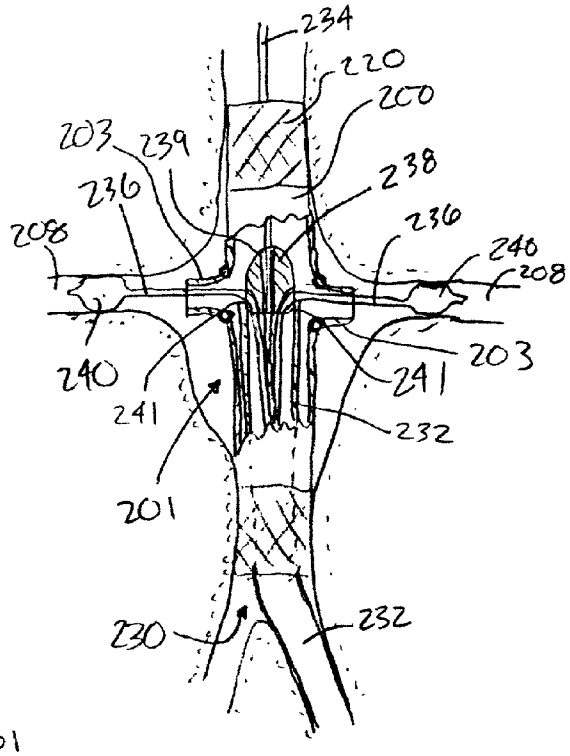

FIG. 8B

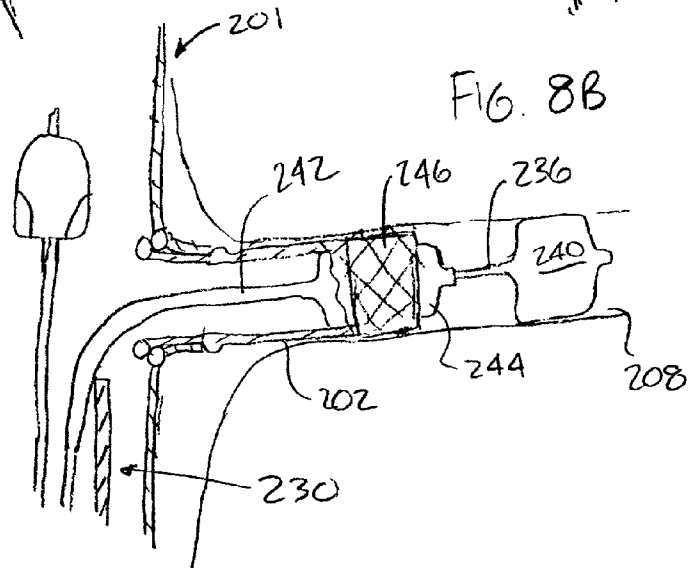

FIG 8C

INTRODUCER FOR DEPLOYMENT OF BRANCHED PROSTHESIS

CROSS-REFERENCE TO RELATED APPLICATION

[0001] This application claims priority of U.S. Provisional Application No. 60/262,787, filed Jan. 19, 2001.

TECHNICAL FIELD

[0002] The present invention relates to an introducer and method for treating a branched lumen and more particularly, an introducer and method for implanting an intraluminal prosthesis having a trunk and at least one arm into a branched lumen, such as the aorta and the renal arteries.

BACKGROUND OF THE INVENTION

[0003] Introducers for implanting prostheses or grafts, such as for repairing aneurysms, are well known for medical practitioners. These introducers essentially comprise a catheter with an inflatable balloon at a distal end thereof. The graft is typically wrapped over the deflated balloon and the catheter-prosthesis assembly is disposed within an outer sheath for insertion into a blood vessel. The introducer is moved along the vessel until positioned in a desired location in a portion of the vessel to be repaired. Once in position, the sheath is retracted to expose the graft-balloon assembly and the balloon is inflated by pressurizing the catheter with fluid. During inflation of the balloon, the prosthesis is expanded and implanted in the vessel wall. The implantation is facilitated by use of intravascular devices called "stents." A stent is a mechanical scaffolding that is typically sutured to the graft and that is expanded, for example by deformation from a compressed diameter to an expanded diameter by inflation of the balloon. The stent, once in its expanded shape against the internal side of the blood vessel, is resistant to compression and therefore holds the graft in place.

[0004] Many prostheses known in the art are implanted by means of an introducer having an elongated balloon or a pair of balloons each located at respective ends of the cylindrical prosthesis. Others comprise two or more portions that must be assembled inside the blood vessel, for example to repair a bifurcated length of the vessel, such as the bifurcation of the aorta into the iliac arteries. So-called "modular" grafts comprising two, three, or more portions are typically implanted by installing one portion at a time and connecting the portions to each other while in situ inside the lumen.

[0005] **FIGS. 1 and 2** show a diagrammatic view of a typical catheter **1** of the prior art. Catheter **1** typically has two lumina extending axially through the catheter: a first lumen (not shown) for sliding the catheter over a guide wire **2**, and a second lumen (not shown) concentrically encompassing the first lumen and in fluid communication with a radially-expandable balloon **3**. Prosthesis **4** is schematically shown wrapped over balloon **3**. Prosthesis **4** comprises one or more stents **10** (shown in **FIG. 2**) to be expanded against a vessel wall for implantation. The catheter-prosthesis assembly is mounted within sheath **6**. Nose cone **5** is provided at a distal end of the introducer. The purpose of the nose cone is to provide a smooth, soft tip for preventing injury to the blood vessel as the introducer is manipulated and pushed through the body lumen to reach the desired location. Nose cone **5** also closes off the distal end of the introducer to prevent blood from entering into the introducer.

[0006] At the proximal end of the introducer, the first and second lumen branch out at angular piece **7** forming an outlet **8** for wire **2** and a connection line **9** connected to a valve (not shown) for supplying the pressurized fluid into the second lumen for inflating the balloon.

[0007] **FIG. 2** shows introducer **1** after having been moved along lumen **12** until reaching a deployment location, such as an aortic aneurysm. Balloon **3** is inflated to exert a radial expanding force from inside prosthesis **4** to radially deform stent **10** until it is implanted against the interior side of a distal portion **11** of lumen **12**, such as an upper neck of an aorta affected by an aneurysm. Guide wire **2** serves to guide the insertion of introducer **1** as well as to assist in positioning graft **4** and stent **10** in the desired location for inflating balloon **3**.

[0008] There are, however, situations where a vessel has, in a section thereof, a junction with one or more branch vessels, such as the junction between the aorta and the renal arteries. A graft for implantation at such a junction, such as for repairing a disorder at the junction of the aorta and renal arteries, requires a different introducer and different deployment method, as a branched graft cannot be implanted without being able to access the aorta and the renal arteries simultaneously to connect the several portions together. Thus, the introducer shown in **FIGS. 1 and 2** would be inadequate for such an implantation, as the complex shape of the necessary prosthesis requires multiple guide wires, and any maneuver to attempt to implant such a complex graft using this introducer would be tedious, difficult, complex and time consuming, if not impossible.

[0009] Therefore, there is a need in the art to provide an introducer and implantation method for implanting a modular or unitary graft into a branched lumen, such as at the junction of the aorta and renal arteries, by a simple, easy and safe way, taking only reasonable time for the safety of the patient.

SUMMARY OF THE INVENTION

[0010] The various features and advantages of this invention are better understood when taken in connection with the accompanying drawings and description. The present invention comprises an introducer for insertion in a lumen from a proximal location outside the lumen to a distal location within the lumen for deployment of a prosthesis at a junction of a main lumen and at least one branch lumen. The introducer comprises an outer sheath having a distal end, an axial guide wire slidable within the outer sheath, at least one peripheral guide wire slidable within the outer sheath, and a nose cone located at the distal end of the outer sheath. The nose cone has a periphery, an axial conduit slidable over the axial guide wire, and at least one peripheral channel spaced apart from the axial conduit for receiving one of the peripheral guide wires. Each peripheral channel may be open to the periphery of the nose cone and may provide communication between an interior of the introducer and the lumen when the nose cone is positioned at the distal end of the sheath. Each peripheral guide wire may comprise an expandable balloon at its distal end.

[0011] The introducer may further comprise a trunk deployment catheter and at least one peripheral deployment catheter. The trunk deployment catheter is concentric with the axial guide wire and has at least one inflatable deployment balloon at its distal end. Each peripheral deployment catheter is concentric with one of the peripheral guide wires and has at least one inflatable deployment balloon at its distal end.

[0012] The invention also comprises a nose cone for use with an introducer for insertion of a prosthesis in a lumen. The nose cone defines an axial conduit for receiving a first guide wire and at least one peripheral channel spaced apart from the axial conduit for receiving a second guide wire. The nose cone typically has a periphery and each peripheral channel is open to the periphery of the nose cone. The nose cone may comprise two peripheral channels that may be diametrically opposed.

[0013] The invention also comprises a unitary prosthesis for deployment in a distal location positioned at a junction of a main lumen and at least one branch lumen. The prosthesis comprises a trunk section and at least one arm section extending radially from the trunk section. The arm section may be approximately perpendicular to the trunk section. The unitary prosthesis may comprise two arm sections, such as for deployment at the junction between the aorta and the renal arteries.

[0014] The unitary prosthesis may comprise a graft and at least one stent. The stent may comprise a distal trunk stent portion expandable for deployment in a distal portion of the main lumen distal the branch lumen, a proximal trunk stent portion expandable for deployment in a proximal portion of the main lumen proximal the branch lumen, and at least one branch stent portion expandable for deployment in one of the branch lumen. The distal trunk stent portion, the proximal trunk stent portion, and each branch stent portion may each comprise separate stents.

[0015] The invention also comprises a method for implanting a unitary prosthesis in a distal location at a junction of a main lumen and at least one branch lumen. The prosthesis to be implanted comprises at least one stent and has a trunk for implantation into the main lumen and at least one arm for implantation into the branch lumen. The method comprises providing an introducer comprising an outer sheath, an axial guide wire and at least one peripheral guide wire slidable within the outer sheath, a nose cone at a distal end of the outer sheath, a trunk deployment catheter concentric with the axial guidewire and having at least one inflatable deployment balloon, and at least one arm deployment catheter concentric with the peripheral guide wire and having at least one inflatable deployment balloon. The nose cone has an axial conduit slidable over the axial guide wire and at least one peripheral guide channel each for receiving one of the peripheral guide wires. Each peripheral guide wire comprises an inflatable anchor balloon at its distal end. The prosthesis is provided inside the outer sheath with the trunk mounted over the axial guide wire and at least one trunk stent portion mounted over each inflatable deployment balloon of the trunk deployment catheter. Each arm is mounted over one of the peripheral guide wires and at least one arm stent portion is mounted over each inflatable deployment balloon of each arm deployment catheter.

[0016] The introducer is fed into the lumen until reaching an implantation position adjacent the branch lumen. The introducer is maintained in the implantation position while advancing each peripheral guide wire distally through one of the peripheral channels of the nose cone until each wire is positioned at a sufficient depth within the corresponding branch lumen. Each anchor balloon on each peripheral guide wire is then inflated to fix the wire in a set position, and the prosthesis is advanced over the axial and peripheral guide wires until each arm of the prosthesis is positioned at a sufficient depth within the branch lumen. Then, the deployment balloons are inflated to expand at least the trunk and arm stent portions of the prosthesis to implant the prosthesis. The method may be used to repair an aneurysm.

[0017] The invention also comprises a method for implanting a modular prosthesis comprising a trunk module for implantation into the main lumen and at least one arm module for implantation into the branch lumen. The trunk module comprises at least one stent and at least one arm fitting. The arm module is adapted to interconnect with the arm fitting of the trunk module and comprises at least one stent.

[0018] The method initially comprises introducing a first introducer into the main lumen until reaching a first implantation position adjacent the branch lumen. The first introducer comprises an outer sheath, an axial guide wire slidable within the outer sheath, a nose cone at a distal end of the outer sheath, and a trunk deployment catheter. The nose cone has an axial conduit slidable over the axial guide wire. The trunk deployment catheter is concentric with the axial guidewire and has at least one inflatable deployment balloon. The modular prosthesis is mounted inside the outer sheath with the trunk module mounted over the axial guide wire and at least one trunk stent portion mounted over each inflatable deployment balloon of the trunk deployment catheter.

[0019] The nose cone is advanced distally to a location distal of the junction of the main lumen with the branch lumen and the trunk module is implanted with each arm fitting aligned with a corresponding branch lumen. The trunk section deployment balloons are inflated to expand the trunk stent portions. Then, a second introducer is introduced into the lumen to a second implantation position. The second introducer comprises an outer sheath, an axial guide wire and at least one peripheral guide wire slidable within the outer sheath, a nose cone at a distal end of the outer sheath, a trunk deployment catheter concentric with the axial guidewire and having at least one inflatable deployment balloon, and at least one arm deployment catheter concentric with the peripheral guide wire and having at least one inflatable deployment balloon. The nose cone has an axial conduit slidable over the axial guide wire and at least one peripheral guide channel each for receiving one of the peripheral guide wires. Each peripheral wire comprises an inflatable anchor balloon at a distal end thereof. Each arm module is mounted over one of the peripheral guide wires and at least one arm stent portion of each arm module is mounted over each inflatable deployment balloon of each arm deployment catheter.

[0020] The second introducer is maintained in the implantation position while advancing each peripheral guide wire distally through one of the peripheral channels of the nose cone and through one of the arm fittings in the implanted trunk module until each peripheral guide wire is positioned

at a sufficient depth within the corresponding branch lumen. Then, each anchor balloon on each peripheral guide wire is inflated to fix the wire in a set position. Each arm module is then advanced over one of the peripheral guide wires until each arm module is positioned at a sufficient depth within the branch lumen and in an interlocking position with one of the arm fittings of the trunk module. Finally, each arm deployment balloon is inflated to expand at least the arm stent portions of each arm module to implant the arm module within the branch lumen and within the corresponding arm fitting of the trunk module.

[0021] The invention also comprises a method for implanting at a junction of a main lumen and at least one branch lumen, a prosthesis comprising at least one portion for implantation into the branch lumen. The method comprises the steps of providing an introducer comprising an outer sheath, an axial guide wire and at least one peripheral guide wire slidable within the outer sheath, and a nose cone at a distal end of the outer sheath. The nose cone has an axial conduit slidable over the axial guide wire and at least one peripheral guide channel for receiving the peripheral guide wire. The peripheral wire comprises an inflatable anchor balloon at its distal end. The introducer is introduced into the lumen until reaching an implantation position adjacent the branch lumen. The introducer is maintained in the implantation position while advancing the peripheral guide wire distally through the peripheral channel of the nose cone until the wire is positioned at a sufficient depth the branch lumen. Then, the anchor balloon is inflated to fix the peripheral guide wire in a set position. The prosthesis is advanced over the peripheral guide wire until at least a portion of the prosthesis is positioned at a sufficient depth within the branch lumen, and then at least a portion of the prosthesis is expanded, such as by balloon expansion, for implantation in the branch lumen.

BRIEF DESCRIPTION OF THE DRAWINGS

[0022] The present invention is illustrated by way of example in the following drawings wherein:

[0023] **FIG. 1** shows a partial cross-sectional view of a catheter of the prior art with a nose cone at the distal end of the catheter;

[0024] **FIG. 2** shows a cross-sectional view of an aortic cylindrical prosthesis being implanted using by the catheter of **FIG. 1**;

[0025] **FIG. 3** shows a cross-sectional view of a distal end of an exemplary introducer according to the present invention, showing the nose cone and three guide wires;

[0026] **FIG. 4** shows a cross-sectional view of the introducer of **FIG. 3**, showing the peripheral guide wires anchored within the renal arteries by inflated anchor balloons;

[0027] **FIG. 5** shows a perspective view of an exemplary graft of this invention having a trunk and two arms for implanting at a junction of lumen such as the aorta and the renal arteries;

[0028] **FIG. 6** shows a cross-sectional view of the introducer of **FIG. 4** with the graft of **FIG. 5** mounted on the guide wires, and

[0029] **FIG. 7** shows a cross-sectional view of the junction of the aorta and the renal arteries with the graft of **FIG. 5** implanted therein with the deployment and anchor balloons inflated.

[0030] **FIG. 8A** shows a cross-sectional view of the junction of the aorta and the renal arteries with a trunk module implanted therein, illustrating an exemplary method of this invention for deployment of a modular prosthesis.

[0031] **FIG. 8B** shows the cross-sectional view of **FIG. 8A**, further showing a partial cross-section of the trunk module and the peripheral guide wire deployment step.

[0032] **FIG. 8C** shows a partial view of the cross-section of **FIG. 8B**, showing a partial cross section of an arm module during a deployment step.

DESCRIPTION OF THE PREFERRED EMBODIMENTS

[0033] Referring now to FIGS. **2-7**, there is shown an exemplary introducer and prosthesis of the invention. Introducer **100** comprises a sheath **13** having a novel nose cone **14** located at a distal end of the introducer. The nose cone has an axial conduit **15** for receiving an axial guide wire **18** and one or more peripheral channels **16** and **17**, spaced apart from each other and from the central orifice. Axial conduit **15** is shown centrally located and channels **16** and **17** diametrically opposed, but the positions of the conduit and channels may be in any configuration advantageous to deploy a prosthesis of a desired geometry in a junction of at least two lumen. Nose cone **14** serves many of the purposes of standard nose cones known in the art, but also provides additional structure to guide multiple guide wires.

[0034] Because of the multiple wires within sheath **13**, introducer **100** may implant a prosthesis having multiple portions or complex configurations. Thus, for repairing a portion of a lumen at a junction with at least one other lumen, such as the junction of the aorta and the renal arteries for example, a more complex graft, like the one shown in **FIG. 5**, may be implanted.

[0035] A prosthesis like the one shown in **FIG. 5** may be successfully and easily implanted in a simple operation using the exemplary introducer shown in **FIGS. 3, 4, 6**, and **7**. Graft **19**, as shown in **FIG. 5**, comprises a trunk **20** and two arms **21** and **22**. The trunk is adapted for implantation into a main lumen, such as the aorta, and arms **21** and **22** are adapted for implantation into respective branch lumen, such as the renal arteries. More precisely, as shown in **FIG. 7**, trunk **20** has a distal end **23** for implantation in a distal portion **24** of the aorta distal of renal arteries **27** and **28**, and a proximal end **25** for implantation in a proximal portion **26** of the aorta proximal of the renal arteries. Arms **21** and **22** are implanted into renal arteries **27** and **28**, respectively.

[0036] Before implanting prosthesis **19**, sheath **13** is located at the position shown in **FIG. 4** and peripheral guide wires **29** and **30** are advanced out of sheath **13** into renal arteries **27** and **28** along respective paths shown by dashed arrows A and B in **FIG. 3**. This movement is facilitated and guided by the curved design of channels **16** and **17** of nose cone **14**. Channels **16** and **17** are preferably open to the outer periphery **114** of nose cone **14**, as shown in **FIG. 3**. Peripheral guide wires **29** and **30** have, at their distal ends, respective inflatable anchor balloons **31** and **32**, shown in an

uninflated configuration in **FIG. 3**. As shown in **FIG. 4**, once in position within the respective renal arteries **27** and **28**, anchor balloons **31** and **32** are inflated to anchor wires **29** and **30**, respectively, within the arteries.

[**0037**] **FIG. 6** shows graft **19** mounted over wires **18**, **29**, and **30** with trunk **20** running over wire **18** and arms **21** and **22** running over wires **29** and **30**, respectively. The trunk is mounted over distal and proximal deployment balloons **33** and **34**, respectively, and each arm **21** and **22** is mounted over corresponding deployment balloon **35** and **36**. Deployment balloons **33** and **34** are a part of trunk deployment catheter **133** and deployment balloons **35** and **36** are each a part of distinct arm deployment catheters **135** and **136**, respectively. Deployment balloons **33-36** are then inflated to implant the respective parts of the graft within the aorta and the renal arteries, as shown in **FIG. 7**. The graft is implanted by expanding distal stent **37** and proximal stent **38**, located in the distal and proximal ends of the trunk respectively, and left renal stent **39** and right renal stent **40**, located in left and right arms **21** and **22**, respectively.

[**0038**] According to the method of the invention, the introducer carrying the prosthesis **19** is located such that arms **21** and **22** enter respective renal arteries **27** and **28**. The arms are easily guided by peripheral guide wires **29** and **30** because the peripheral guide wires are firmly retained by anchor balloons **31** and **32**, respectively. Once in position, balloons **33**, **35**, and **36** are inflated, simultaneously or in any sequence desired, to implant the distal end of trunk **20** and arms **21** and **22**. Balloon **34** may also be inflated at any time, but it is preferable to deflate balloons **33**, **35**, and **36** and remove wires **18**, **29** and **30** out of trunk **20** first before inflating balloon **34** to implant stent **38**. In an alternative embodiment without balloon **34**, stent **38** may be implanted by balloon **33** after stent **37** has been implanted, by retracting wire **18** proximally until balloon **33** is in position to expand stent **38**. Thus, a single balloon **33** may enough to implanting both the distal and proximal portions of trunk **20** within the aorta.

[**0039**] In summary, an exemplary deployment method of the invention comprises introducing the introducer into the lumen until reaching a deployment position adjacent a junction of a main lumen and one or more branch lumen, such as the junction among aorta **12** and renal arteries **27** and **28**. The introducer is retained in the deployment position while advancing peripheral guide wires **29** and **30** distally through peripheral channels **16** and **17** of nose cone **14**, until each wire enters the corresponding renal artery. Anchor balloons **31** and **32** are then inflated to fix peripheral guide wires **29** and **30** wires in position within the renal arteries. Prosthesis **19** is then advanced over guide wires **18**, **29** and **30** using deployment catheters **133**, **135**, and **136** until arms **21** and **22** of the prosthesis are positioned within the renal arteries. Deployment balloons **33-36** are then inflated inside prosthesis **19** to expand stents **37-40** to implant the trunk and the arms of the prosthesis where desired. Inflation of balloons **33-36** may be carried out simultaneously or sequentially to effect adequate installation.

[**0040**] Although the introducer described herein is useful for deploying a unitary branched prosthesis as shown in **FIG. 5**, modular branched prostheses are known in the art, such as are described in U.S. Pat. No. 5,984,955, which is incorporated herein by reference. The elements of the present invention are also advantageous for deploying a modular prosthesis **201** comprising a trunk module **200** and at least one arm module **202**, as shown in FIGS. **8A-8C**. Trunk module **200** has at least one arm fitting **203** into which arm module **202** interlocks.

[**0041**] The modular prosthesis deployment method comprises introducing a first introducer **204** into main lumen **206** until reaching an implantation position adjacent branch lumen **208**, as shown in **FIG. 8A**. First introducer **204** comprises at least outer sheath **210**, axial guide wire **212**, a nose cone **214** having at least an axial conduit slidable over the axial guide wire. First introducer **204** also comprises a trunk deployment catheter **216** concentric with axial guidewire **212** and having at least one inflatable deployment balloon **218**. For introduction, modular prosthesis **201** is compressed inside outer sheath **210** with trunk module **200** mounted over axial guide wire **212** and at least one trunk stent portion **220** mounted over each inflatable deployment balloon **218** of the trunk deployment catheter **216**.

[**0042**] To deploy trunk module **200**, nose cone **214** is first advanced distally to a location distal of the junction of main lumen **206** with the branch lumen **208**. Then, trunk module **200** is implanted with each arm fitting **203** aligned with a corresponding branch lumen **208** by inflating the trunk section deployment balloons **218** to expand the trunk stent portions **220**. A single trunk section deployment balloon **218** may be used to first inflate distal trunk section **220***a* and then proximal trunk section **220***b*, as shown in **FIG. 8A**.

[**0043**] Then, as shown in **FIG. 8B, a** second introducer **230** is maneuvered into deployment position. Second introducer **230** comprises an outer sheath **232**, an axial guide wire **234** and at least one peripheral guide wire **236** slidable within the outer sheath, and a nose cone **238** at a distal end of the outer sheath, the nose cone having an axial conduit **239** slidable over the axial guide wire and a peripheral guide channel **241** for receiving the peripheral guide wire. Each peripheral guide wire comprises an inflatable anchor balloon **240** at its distal end. Second introducer **230** is maintained in the position shown in **FIG. 8B** while advancing each peripheral guide wire **236** distally through one of peripheral channels **241** of nose cone **238** and through arm fitting **203** in implanted trunk module **200** until each peripheral guide wire **236** is positioned at a sufficient depth within the branch lumen **208**. Anchor balloon **240** on each peripheral guide wire **236** is inflated to fix the wire in a set position.

[**0044**] As shown in **FIG. 8C**, introducer **230** further comprises an arm deployment catheter **242** concentric with peripheral guide wire **236** and having at least one inflatable deployment balloon **244**. For introduction into the lumen, arm module **202** is mounted over peripheral guide wire **236** with arm stent portion **246** mounted over inflatable deployment balloon **244**. After deployment of peripheral guide wires **236**, nose cone **238** is advanced distally out of the way so that each arm module **202** may be advanced over each peripheral guide wire **236** until the arm module is positioned at a sufficient depth within branch lumen **208** and in an interlocking position with arm fittings **203**. Arm deployment balloon **244** is then inflated to expand arm stent portion **246** to implant arm module **202** within branch lumen **208** and within arm fitting **203** of trunk module **200**. Although shown in **FIG. 8C** with a "snap fit" between arm module **202** and arm filling **203**, any type of fitting may be present, including

a stent-reinforced fit. Additional deployment balloons may thus be present for securing the fit at arm fitting **203**. Alternatively, deployment balloon **244** may be used to inflate any and all stents in arm module **202**, either as a single balloon stretching across the all the stents that are present in the arm module, or by inflating to deploy a first stent, moving the balloon, and then inflating it again to deploy one or more other stents.

[**0045**] Although a single arm module **202** is shown being implanted in one of branch lumen **208** in **FIG. 8**C, the same steps may be repeated for additional arms. The modular prostheses, like the unitary prosthesis shown and described herein, may comprise a single arm, two arms such as for implantation in the aorta and renal arteries, or more than two arms. As used herein, the word "unitary" means "not modular," in other words, comprising a single unit rather than multiple sections that need assembly either in situ or before implantation.

[**0046**] Although the method above is shown and described using two separate introducers **204** and **230**, a single introducer may be used to perform the modular deployment method. In such case, trunk module **200** is deployed with the arm module **202** and arm deployment catheter **242** positioned within outer sheath **210** proximal of the proximal end of the trunk module. After deployment of trunk module **200**, nose cone **214** (which has at least one peripheral channel **241**) is retracted to the position of nose cone **238** aligned with branch lumen **208** as shown in **FIG. 8B**. Arm deployment catheter **242** is then advanced distally into the peripheral channel of nose cone **214** and out into branch lumen **208**.

[**0047**] Although shown in each embodiment with separate stents for each of the distal and proximal trunk stent portions and each of the arm stent portions, a single continuous stent may be present in the unitary stent embodiment or each module may comprise a single continuous stent throughout that module. Likewise, separate stent portions in addition to those specifically denoted herein may be present. Deployment balloons may therefore be placed and inflated accordingly to deploy the prosthesis as desired.

[**0048**] Although shown with branch lumen **208** perpendicular to main lumen **206**, branch lumen may make any angle with the main lumen. Accordingly, the configuration of nose cone channels **14** may be tailored to deflect the peripheral guide wires as needed.

[**0049**] While deployment of a unitary prosthesis lends itself best to using balloon-expandable stents, the nose cone of this invention for directing guide wires into branch lumen is not limited to use only with balloon-expandable stents. Thus, self-expanding stents may also be deployed over guidewires placed using a nose cone with peripheral channels. For example, a modular prosthesis comprising self-expanding stents may be deployed by a method similar to the modular method described herein, except that instead of inflating a balloon to deploy each stent, a sheath or other constraint, such as a crochet-loop, may be released to deploy each stent portion.

[**0050**] While preferred embodiments of the present invention have been illustrated and described, it will be obvious to those skilled in the art that various changes and modifications may be made therein without departing from the scope of the invention as defined in the appended claims.

What is claimed:

1. An introducer for insertion in a lumen from a proximal location outside the lumen to a distal location within the lumen for deployment of a prosthesis at a junction of a main lumen and at least one branch lumen, the introducer comprising:

an outer sheath having a distal end;

an axial guide wire slidable within the outer sheath;

at least one peripheral guide wire slidable within the outer sheath;

a nose cone located at the distal end of the outer sheath, the nose cone having a periphery, an axial conduit slidable over the axial guide wire, and at least one peripheral channel spaced apart from the axial conduit for receiving one of the peripheral guide wires.

2. The introducer of claim 1, wherein each peripheral channel is open to the periphery of the nose cone.

3. The introducer of claim 2, wherein each peripheral channel provides communication between an interior of the introducer and the lumen when the nose cone is positioned at the distal end of the sheath.

4. The introducer of claim 1, wherein each peripheral guide wire comprises an expandable balloon at a distal end thereof.

5. The introducer of claim 1, wherein the at least one peripheral guide wire comprises two peripheral guide wires and the at least one peripheral channel comprises two peripheral channels, each for receiving one of the peripheral guide wires.

6. The introducer of claim 5, wherein the two peripheral channels are located at diametrically opposed locations on the nose cone.

7. The introducer of claim 1 further comprising:

a trunk deployment catheter concentric with the axial guide wire and having at least one inflatable deployment balloon at a distal end thereof; and

at least one peripheral deployment catheter, each concentric with one of the peripheral guide wires and having at least one inflatable deployment balloon at a distal end thereof.

8. The introducer of claim 7 further comprising:

the prosthesis for deployment in the body lumen, the prosthesis comprising a trunk and at least one arm extending radially from the trunk, the prosthesis adapted to be introduced into the lumen in a compressed configuration with the trunk concentric with the trunk deployment catheter and each arm concentric with one of the peripheral deployment catheters, the prosthesis adapted to be deployed in the lumen in an expanded configuration with the trunk in the main lumen and each arm in one of the branch lumen.

9. The introducer of claim 8, wherein the prosthesis comprises a graft and at least one stent.

10. The introducer of claim 9, wherein the at least one stent comprises:

a distal trunk stent portion expandable for deployment in a distal portion of the main lumen distal the branch lumen;

a proximal trunk stent portion expandable for deployment in a proximal portion of the main lumen proximal the branch lumen; and

at least one branch stent portion expandable for deployment in one of the branch lumen.

11. The introducer of claim 10, wherein the trunk deployment catheter comprises at least one inflatable deployment balloon for deploying the distal trunk stent portion and at least one inflatable deployment balloon for deploying the proximal trunk stent portion.

12. The introducer of claim 10, wherein the trunk deployment catheter consists of only a single inflatable deployment balloon maneuverable for deploying both the distal trunk stent portion and the proximal trunk stent portion.

13. The introducer of claim 10, wherein the distal trunk stent portion, the proximal trunk stent portion and each branch stent portion comprise separate stents.

14. A nose cone for use with an introducer for insertion of a prosthesis in a lumen from a proximal location outside the lumen to a distal location within the lumen, the nose cone defining an axial conduit for receiving a first guide wire and at least one peripheral channel spaced apart from the axial conduit for receiving a second guide wire.

15. The nose cone of claim 14, wherein the nose cone has a periphery and each peripheral channel is open to the periphery of the nose cone.

16. The nose cone of claim 14, wherein the at least one peripheral channel comprises two peripheral channels.

17. The nose cone of claim 16, wherein the peripheral channels are diametrically opposed.

18. A unitary prosthesis for deployment in a distal location within the lumen from a proximal location outside the lumen, the distal location positioned at a junction of a main lumen and at least one branch lumen, the prosthesis comprising a trunk section and at least one arm section extending radially from the trunk section.

19. The unitary prosthesis of claim 18, wherein the arm section is approximately perpendicular to the trunk section.

20. The unitary prosthesis of claim 18, wherein the at least one arm section comprises two arm sections.

21. The unitary prosthesis of claim 20, wherein the prosthesis is adapted to be deployed at a junction wherein the main lumen comprises an aorta and each branch lumen comprises a renal artery.

22. The unitary prosthesis of claim 18, wherein the prosthesis comprises a graft and at least one stent.

23. The unitary prosthesis of claim 22, wherein the at least one stent comprises:

a distal trunk stent portion expandable for deployment in a distal portion of the main lumen distal the branch lumen;

a proximal trunk stent portion expandable for deployment in a proximal portion of the main lumen proximal the branch lumen; and

at least one branch stent portion expandable for deployment in one of the branch lumen.

24. The unitary prosthesis of claim 23, wherein the distal trunk stent portion, the proximal trunk stent portion and each branch stent portion comprise separate stents.

25. A method for implanting a prosthesis in a distal location within the lumen from a proximal location outside the lumen, the distal location positioned at a junction of a main lumen and at least one branch lumen, the prosthesis comprising at least one stent and having a trunk and at least one arm, each arm for implantation into the branch lumen and the trunk for implantation into the main lumen, the method comprising the steps of:

(a) providing an introducer comprising an outer sheath; an axial guide wire and at least one peripheral guide wire slidable within the outer sheath; a nose cone at a distal end of the outer sheath, the nose cone having an axial conduit slidable over the axial guide wire and at least one peripheral guide channel each for receiving one of the peripheral guide wires, each peripheral guide wire comprising an inflatable anchor balloon at a distal end thereof; a trunk deployment catheter concentric with the axial guidewire and having at least one inflatable deployment balloon; and at least one arm deployment catheter concentric with the peripheral guide wire and having at least one inflatable deployment balloon;

(b) providing the prosthesis inside the outer sheath with the trunk mounted over the axial guide wire and at least one trunk stent portion mounted over each inflatable deployment balloon of the trunk deployment catheter and each arm mounted over one of the peripheral guide wires and at least one arm stent portion mounted over each inflatable deployment balloon of each arm deployment catheter;

(c) introducing the introducer into the lumen until reaching an implantation position adjacent the branch lumen;

(d) maintaining the introducer in the implantation position while advancing each peripheral guide wire distally through one of the peripheral channels of the nose cone until each wire is positioned at a sufficient depth within the corresponding branch lumen;

(e) inflating each anchor balloon on each peripheral guide wire to fix the wire in a set position;

(f) advancing the prosthesis over the axial and peripheral guide wires until each arm of the prosthesis is positioned at a sufficient depth within the branch lumen, and

(g) inflating the deployment balloons to expand at least the trunk and arm stent portions of the prosthesis to implant the prosthesis.

26. The method of claim 25, wherein the main lumen comprises an aorta and the at least one branch lumen comprises the renal arteries, the prosthesis comprises two arms, the introducer comprises two peripheral guide wires and two arm deployment catheters, and the nose cone comprises two peripheral channels, the method further comprising implanting the prosthesis at the junction of the aorta and renal arteries.

27. The method of claim 26 comprising repairing an aneurysm by implanting the prosthesis.

28. The method of claim 25, wherein the prosthesis comprises a distal trunk stent portion distal the branch lumen and a proximal trunk stent portion proximal the branch lumen and implanting the prosthesis in step (g) comprises first inflating deployment balloons to deploy the distal trunk stent portion and all arm stent portions, then deflating each arm deployment balloon and retracting each arm deployment catheter at least to a position proximal the proximal trunk stent portion, then inflating a deployment balloon to deploy the proximal trunk stent portion.

29. The method of claim 28, wherein the trunk deployment catheter comprises a distal deployment balloon and a proximal deployment balloon, the method comprising inflating the distal deployment balloon prior to retracting the arm deployment catheters and inflating the proximal deployment balloon after retracting the arm deployment catheters.

30. The method of claim 28, wherein the trunk deployment catheter comprises a single trunk deployment balloon for expanding both the distal trunk stent portion and the proximal trunk stent portion, the method comprising inflating the single deployment balloon to expand the distal trunk section, retracting the arm deployment catheters after expanding the arm stent portions, deflating and partially retracting the trunk deployment balloon to a position proximal the proximal stent portion, and re-inflating the trunk deployment balloon to expand the proximal stent portion.

31. The method of claim 28 wherein step (f) further comprises advancing the nose cone distal of the junction between the branch lumen and the main lumen.

32. A method for implanting a modular prosthesis in a distal location within the lumen from a proximal location outside the lumen, the distal location positioned at a junction of a main lumen and at least one branch lumen, the modular prosthesis comprising a trunk module for implantation into the main lumen and comprising at least one stent and at least one arm fitting, the modular prosthesis further comprising at least one arm module for implantation into the branch lumen, the arm module adapted to interconnect with the arm fitting of the trunk module and comprising at least one stent, the method comprising the steps of:

(a) introducing a first introducer into the main lumen until reaching a first implantation position adjacent the branch lumen, the first introducer comprising an outer sheath; an axial guide wire slidable within the outer sheath; a nose cone at a distal end of the outer sheath, the nose cone having an axial conduit slidable over the axial guide wire; a trunk deployment catheter concentric with the axial guidewire and having at least one inflatable deployment balloon; the modular prosthesis inside the outer sheath with the trunk module mounted over the axial guide wire and at least one trunk stent portion mounted over each inflatable deployment balloon of the trunk deployment catheter

(b) advancing the nose cone distally to a location distal of the junction of the main lumen with the branch lumen;

(c) implanting the trunk module with each arm fitting aligned with a corresponding branch lumen by inflating the trunk section deployment balloons to expand the trunk stent portions;

(d) introducing a second introducer into the lumen to a second implantation position, the second introducer comprising an outer sheath; an axial guide wire and at least one peripheral guide wire slidable within the outer sheath; a nose cone at a distal end of the outer sheath, the nose cone having an axial conduit slidable over the axial guide wire and at least one peripheral guide channel each for receiving one of the peripheral guide wires, each peripheral wire comprising an inflatable anchor balloon at a distal end thereof; a trunk deployment catheter concentric with the axial guidewire and having at least one inflatable deployment balloon; at least one arm deployment catheter concentric with the peripheral guide wire and having at least one inflatable deployment balloon; each arm module mounted over one of the peripheral guide wires and at least one arm stent portion of each arm module mounted over each inflatable deployment balloon of each arm deployment catheter;

(e) maintaining the second introducer in the implantation position while advancing each peripheral guide wire distally through one of the peripheral channels of the nose cone and through one of the arm fittings in the implanted trunk module until each peripheral guide wire is positioned at a sufficient depth within the corresponding branch lumen;

(f) inflating each anchor balloon on each peripheral guide wire to fix the wire in a set position;

(g) advancing each arm module over one of the peripheral guide wires until each arm module is positioned at a sufficient depth within the branch lumen and in an interlocking position with one of the arm fittings of the trunk module;

(h) inflating each arm deployment balloon to expand at least the arm stent portions of each arm module to implant the arm module within the branch lumen and within the corresponding arm fitting of the trunk module.

33. The method of claim 32 wherein the first introducer and the second introducer are the same introducer, and step (c) is performed with each arm module and arm deployment catheter positioned within the outer sheath proximal of the proximal end of the trunk module, and step (d) comprises retracting the nose cone to a position aligned with the branch lumen.

34. A method for implanting a prosthesis in a distal location within the lumen from a proximal location outside the lumen, the distal location positioned at a junction of a main lumen and at least one branch lumen, the prosthesis having a compressed configuration and an expanded configuration and comprising at least one portion for implantation into the branch lumen, the method comprising the steps of:

(a) providing an introducer comprising an outer sheath; an axial guide wire and at least one peripheral guide wire slidable within the outer sheath; a nose cone at a distal end of the outer sheath, the nose cone having an axial conduit slidable over the axial guide wire and at least one peripheral guide channel for receiving the peripheral guide wire, the peripheral wire comprising an inflatable anchor balloon at a distal end thereof;

(b) introducing the introducer into the lumen until reaching an implantation position adjacent the branch lumen;

(c) maintaining the introducer in the implantation position while advancing the peripheral guide wire distally through the peripheral channel of the nose cone until the wire is positioned at a sufficient depth the branch lumen;

(d) inflating the anchor balloon to fix the peripheral guide wire in a set position;

(e) advancing the prosthesis over the peripheral guide wire until at least a portion of the prosthesis is positioned at a sufficient depth within the branch lumen, and

(f) expanding at least a portion of the prosthesis to implant the portion of the prosthesis in the branch lumen.

35. The method of claim 34 wherein the prosthesis is expanded in step (f) by balloon-expansion.

* * * * *