Oct. 4, 1960 MASAHIDE YAZAWA ET AL 2,954,687

CONTINUOUS TREATMENT OF TEXTILE MATERIAL UNDER PRESSURE

Filed May 3, 1955

Fig. 1

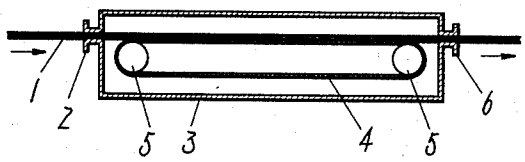

Fig. 2

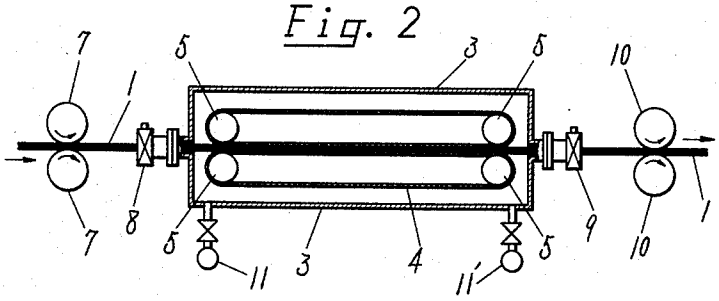

Fig. 3

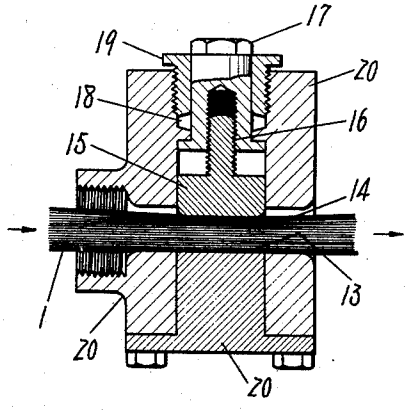

Fig. 4

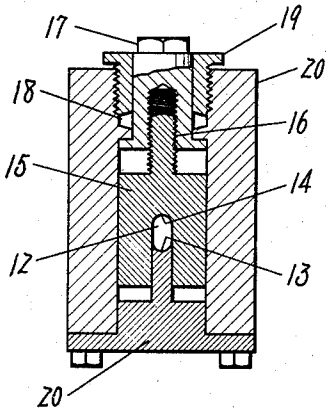

Fig. 5

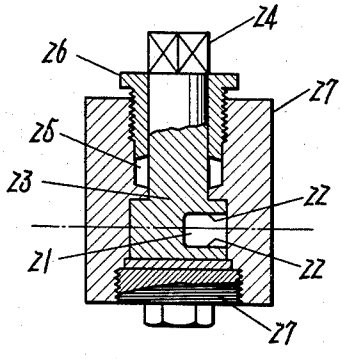

Fig. 6

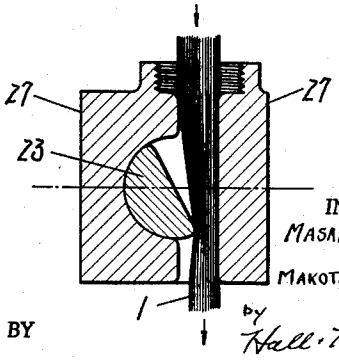

INVENTORS
MASAHIDE YAZAWA,
&
MAKOTO ARAKAWA.

BY by Hall & Houghton.

ATTORNEY

United States Patent Office 2,954,687
Patented Oct. 4, 1960

2,954,687

CONTINUOUS TREATMENT OF TEXTILE MATERIAL UNDER PRESSURE

Masahide Yazawa, Motoyama-mura, Muko-gun, and Makoto Arakawa, Kawasaki-shi, Japan, assignors to Kanegafuchi Boseki Kaisha, doing business as Kanegafuchi Spinning Company Limited, Tokyo-to, Japan, a corporation of Japan

Filed May 3, 1955, Ser. No. 505,800

1 Claim. (Cl. 68—5)

The present invention relates to an apparatus for continuously treating textile material as in an autoclave.

This invention is characterized by the use of narrow nozzles which may have adjustable cross-sections through which the textile material to be treated is passed.

In the refining (degumming) of cotton yarn and cloth by a dilute alkali solution, batch operations employing an autoclave pressurized to 30–40 lbs. per sq. inch, at a temperature of 120–130° C., have been generally used. Recently, in the finishing, dyeing and heat treatment of textile material, it has been necessary to heat the said textile material to over 100° C. in the presence of water. For example, an autoclave is used in dyeing polyester fiber at a temperature of over 100° C. under pressure; in the heat treatment of spun polyvinyl alcohol fiber in the presence of water and ammonium sulphate saturated solution at a temperature of about 140–150° C. and pressure of about 40–60 lbs. per sq. inch; and also in the heat setting of nylon fabrics by pressurized steam at 140–150° C. Staple fiber of viscose, after treatment by steam under pressure at 150–170° C., becomes quite hydrophobic, water absorption being almost the same as that of degummed cotton, and in view of other resulting improvements in quality, this treatment may be considered as cottonization of staple fiber. In the foregoing examples an autoclave has been used, but processing is not continuous, only batch operations being employed.

The present invention relates to an apparatus for autoclave treatment which makes possible continuous treatment, whereby the textile material may be processed continuously through the autoclave. According to the invention a pressure reducing nozzle is used at the inlet and outlet of the textile material with respect to the autoclave. The textile material can then be treated more practically in rope form, tow form or belt form, the large surface resistance to pressure leakage possessed by textile material being utilized to prevent leakage from the autoclave. A valve or a cock may be employed to control the internal area of the nozzle cross-section. Then by the combined effects of the said large surface resistance to pressure leakage and the control of cross-sectional area of material passage, the textile material may be fed in and out of the autoclave continuously.

A more complete comprehension of the invention may be had from the following detailed description in conjunction with the accompanying drawing, wherein:

Fig. 1 is a diagrammatic view of a first form of the invention;

Fig. 2 is a similar view of a modified form;

Fig. 3 is a longitudinal sectional view of one form of nozzle valve which may be employed in the invention;

Fig. 4 is a transverse sectional view of the nozzle valve of Fig. 3;

Fig. 5 is a transverse sectional view of another form of nozzle valve; and

Fig. 6 is a longitudinal sectional view of the nozzle valve of Fig. 5.

Referring to the drawing, when a tow of man-made

fiber is passed through a nozzle on an autoclave, for example, and if pressurized fluid from the autoclave leaks past the fiber, the said fiber is sucked in at the point at which the speed of fluid leakage is greatest. Thus parallel fibers of tow are separated from each other and are distributed almost uniformly in the cross-sectional area of the nozzle, and consequently, when there is an adequate length of nozzle, the very large surface resistance of separated fibers to pressure leakage provides a sufficient reduction in leakage to make continuous operation possible. For example, we have found that if 30–40 percent of the internal cross-sectional area of a nozzle is occupied by the sum of the cross-sectional area of filaments, continuous operation is possible, and with a nozzle length of 5–10 mm. it is possible practically to cut off a pressure of 50–80 lbs. per sq. inch.

In the treatment of cloth, the desired result may be obtained if the cloth passes through the nozzle in irregularly folded rope state or in simple rope form, but if the cloth passes through a rectangular nozzle in W-type folded state, i.e. in regularly zig-zag folded state, the pressure cutting is more constant and easier.

If a suitably designed valve or cock is used in the pressure cutting nozzle, the sectional area of the nozzle passage can be easily controlled during operation. This form of the invention particularly is effective if the cross-sectional area of rope form textile material changes, for example, at the connecting parts of two different tows or if different lots of textile materials to be finished have different cross-sectional area in rope form.

Illustration of drawings:

Fig. 1 illustrates pressure cutting by passing textile material through a simple nozzle or slit. Rope form textile material **1** passes through inlet pressure cutting nozzle or slit **2**, then is treated in autoclave **3** by steam under pressure or solution **4**, passes through turn rolls **5**, and at last through outlet pressure cutting nozzle or slit **6**, being continuously extruded to the exterior.

Fig. 2 illustrates the concept of pressure cutting by passing textile material through a nozzle or slit with a valve or cock. Textile material **1** passes through squeeze rolls **7**, and inlet pressure cutting nozzle with valve or cock **8**, and then over turn rolls **5**, in autoclave **3**, while being treated by pressure steam or solution **4**, and at last through an outlet nozzle with valve or cock **9**, being extruded continuously to the exterior. **10** denotes outlet squeeze rolls, and **11**, **11'** the inlet and outlet of the pressure steam or solution.

Fig. 3 and Fig. 4 illustrate in greater detail the valve to be mounted in the pressure cutting nozzle. **1** is the textile material, **12** the narrow nozzle, **13** the fixed inside of the nozzle, **14** the movable inside of the nozzle to control the cross-section of the nozzle, **15** a plug which can be moved up and down by the screw **16** connecting with turning bolt **17**, **18** the stuffing box of the bolt, **19** a packing nut and **20** the valve body. In the form shown in Fig. 5 and Fig. 6, **1** is the textile material, **21** the passage for the textile material, **22** the inside of the passage, **23** a rotatable plug which can control the cross-section area of the passage, **24** the exterior end of the plug, **25** the stuffing box of the plug, **26** a packing nut, and **27** the cock body.

Example I

In a case of heat treatment of tow having several hundred thousand deniers (denier of single fiber 1.5–3d) of spun and stretched polyvinyl alcohol fiber in an autoclave for 20–30 minutes, with ammonium sulphate saturated solution at 140–150° C., 3–4 atm. pressure, continuous operation is made possible very easily without damaging the fiber by using a valve of rectangular or

round passage which controls the cross-sectional area of the tow passage at the inlet and outlet of the autoclave.

Example II

In a case of dyeing and heat treatment of polyester fiber tow and staple fiber tow of viscose rayon, the same method can be used as described in Example I.

Example III

In a case of degumming continuous cotton cloth in a heated state at 30–40 lbs. per sq. inch, in dilute alkali solution, and of pressure steam setting or high pressure dyeing of synthetic fiber cloth of nylon, "Dacron," etc., for passing of the cloth through the pressure cutting nozzle at the inlet and the outlet of the autoclave, it is convenient to use a rectangular adjustable nozzle passage with the cloth in regular zig-zag folded state.

What is claimed is:

Apparatus for treating textile material under pressure continuously, comprising an autoclave having an inlet and an outlet for said material, means for feeding said material continuously from said inlet to said outlet, and means for setting the cross-sectional area of said inlet and said outlet with respect to the cross-sectional area of said material to cut off the pressure thereat, said means comprising a block having an elongated nozzle passage extending therethrough, said passage being formed partly in a fixed member and partly in an adjustable member, the fixed member being a narrow wall extending in the direction of the material feed and having a groove in one free edge of said wall extending in said direction, the adjustable member being a U-shaped block straddling said wall and having in its crotch a complementary groove forming with said first groove the aforesaid nozzle passage, and means for slidably adjusting the adjustable member relative to the fixed member to vary the cross-sectional area of said elongated nozzle passage.

References Cited in the file of this patent

UNITED STATES PATENTS

2,228,272	Kinsella	Jan. 14, 1941
2,299,145	Hill et al.	Oct. 20, 1942
2,380,422	Frank	July 31, 1945
2,424,403	Lodge	July 22, 1947
2,529,563	Miller	Nov. 14, 1950
2,708,843	Gibson et al.	May 24, 1955