March 18, 1924. 1,486,886

J. H. HAMMOND, JR

SYSTEM FOR TELEDYNAMICALLY CONTROLLING MOVING BODIES

Original Filed June 3, 1914 2 Sheets-Sheet 1

Fig. 1.

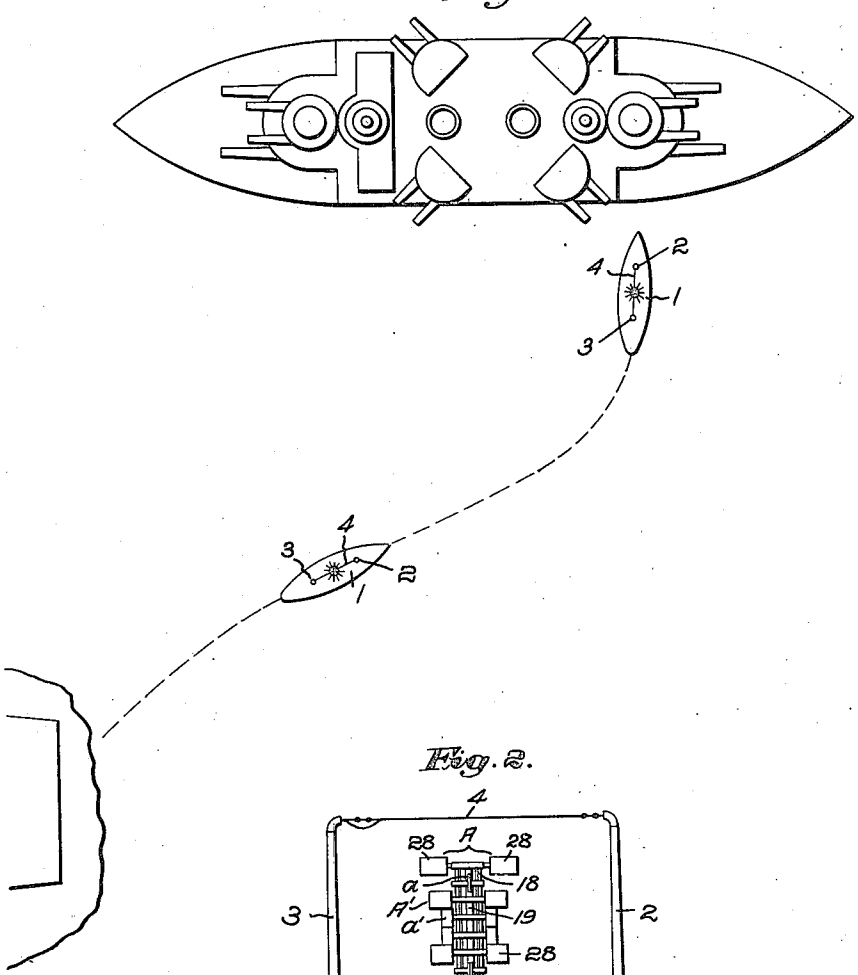

Fig. 2.

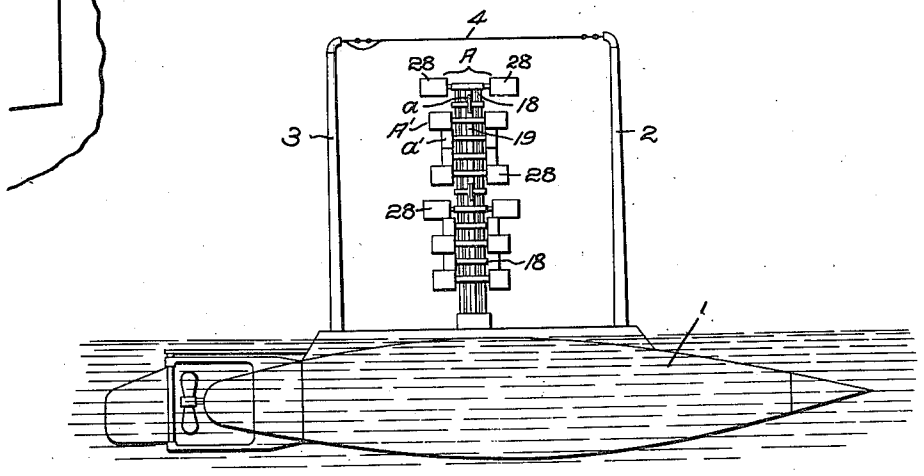

Witnesses:
Horace A. Crossman
Carl L. Choate.

Inventor:
John Hays Hammond, Jr.
by Emery, Booth, Janney & Varney
Attys

March 18, 1924. 1,486,886

J. H. HAMMOND, JR

SYSTEM FOR TELEDYNAMICALLY CONTROLLING MOVING BODIES

Original Filed June 3, 1914 2 Sheets-Sheet 2

Fig. 3

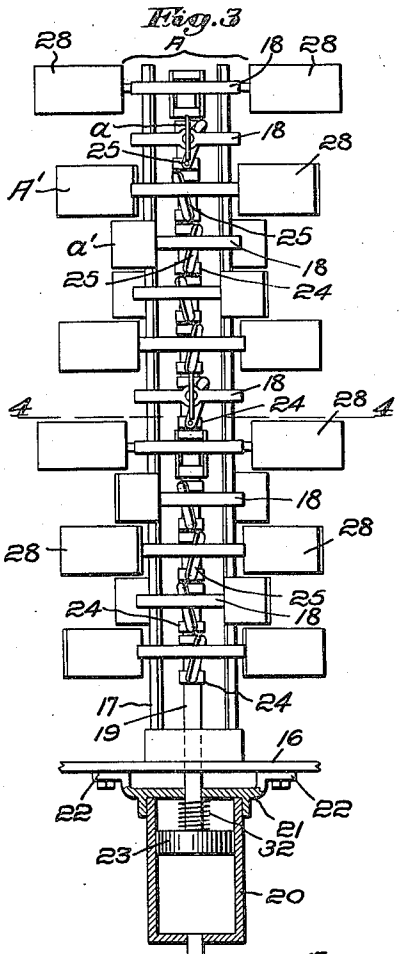

Fig. 4.

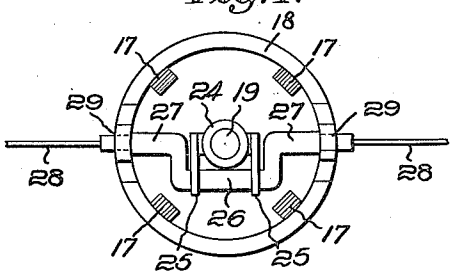

Fig. 5.

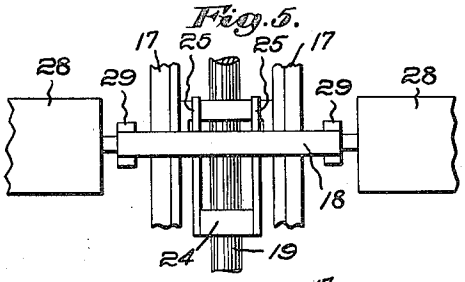

Fig. 6.

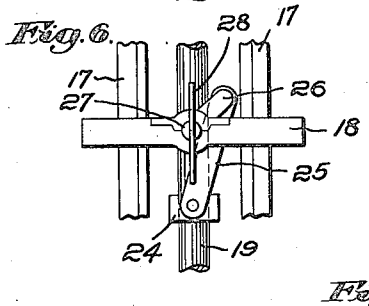

Fig. 2.

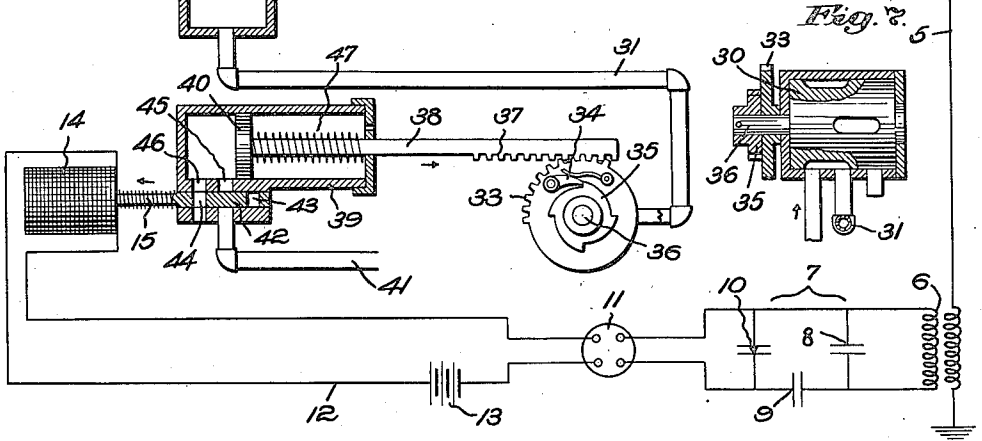

Witnesses:
Horace A. Grossman
Carl L. Choate.

Inventor:
John Hays Hammond, Jr.
by Emery, Booth, Janney & Varney
Attys

Patented Mar. 18, 1924. 1,486,886

UNITED STATES PATENT OFFICE.

JOHN HAYS HAMMOND, JR., OF GLOUCESTER, MASSACHUSETTS.

SYSTEM FOR TELEDYNAMICALLY CONTROLLING MOVING BODIES.

Application filed June 3, 1914, Serial No. 842,764. Renewed July 24, 1923.

To all whom it may concern:

Be it known that I, JOHN HAYS HAMMOND, Jr., a citizen of the United States, and a resident of Gloucester, in the county of Essex and State of Massachusetts, have invented an Improvement in Systems for Teledynamically Controlling Moving Bodies, of which the following description, in connection with the accompanying drawings, is a specification, like characters on the drawings representing like parts.

This invention relates to systems for teledynamically controlling moving bodies, and particularly to means for controlling position indicating means upon such bodies. The invention is applicable to moving bodies adapted to travel in water, upon land, or through the air, but is peculiarly adapted for use in connection with torpedo boats, the movements whereof are controlled from a distant station.

In order that the principle of the invention may be readily understood, I have disclosed a single embodiment of the invention in the accompanying drawings, wherein—

Fig. 1 is a somewhat diagrammatic representation of a war ship and the course of an attacking torpedo or other craft provided with position indicating means in accordance with my invention;

Fig. 2 is a side elevation of a vessel, such as a torpedo boat, embodying my invention;

Fig. 3 is a view, partially in elevation, partially in vertical section and partially diagrammatic of position indicating means and controlling means therefor responsive to radiant energy;

Fig. 4 is a transverse section taken upon the line 4—4 of Fig. 3;

Fig. 5 is a detail in side elevation of the structure shown in Fig. 4;

Fig. 6 is a view similar to Fig. 5, but viewing the structure at a position circumferentially removed by ninety degrees therefrom; and

Fig. 7 is a vertical section of the rotary valve shown in Fig. 3.

My invention relates to a system for the control of moving bodies by radiant energy and particularly to the control from a distant station of position indicating means mounted upon or carried by such body. The movable body may be of any suitable character, and preferably is one controlled by radiant energy of any desired nature, such as sound, light or electromagnetic waves, but which consists preferably of electromagnetic waves emitted from the control station. The movable body may be a water, land or air craft, such as a vessel, vehicle or aeroplane, but herein I have represented my invention as applied to a vessel 1, which may be of any suitable type. The said vessel is equipped with suitable means responsive to radiant energy emitted from the distant control station, and herein I have represented the vessel as having masts 2, 3, supporting an antenna 4, indicated diagrammatically in Fig. 3. In Fig. 3, I have diagrammatically indicated at 4 the antenna of an open, oscillatory circuit 5 operatively connected to the winding 6 of a closed, oscillatory circuit 7 having therein suitable condensers 8, 9 and a suitable detector 10 of electrical oscillations. The said closed, oscillatory circuit is provided with a sensitive relay 11 or other suitable contact making device with which is connected a circuit 12 having therein a battery or other source of electromotive force and having a solenoid 14 adapted to be energized upon the receipt of electromagnetic waves by the said circuit 5. The said solenoid is provided with a core 15, and in any suitable manner I impart movement thereby to a part or mechanism adapted to function in the control of the vessel to effect steering thereof, and such other control as may be desired, as for example the starting and stopping of the engine, and also the action of the indicating mechanism, to which my invention more particularly relates.

For this purpose, I may provide any suitable mechanism, but preferably I provide a valve of the general type shown in my copending application Serial No. 816,600, filed February 4, 1914, and with which I associate suitable devices and retarding mechanism, whereby the said valve may act in the control of a plurality of functioning mechanisms upon the vessel or other movable body. Through said valve or any other suitable means, I effect steering of the vessel by imparting suitable movement to its rudder, and if desired I also control starting and stopping of the engine, and also control other

functioning parts or devices. The said valve may be of the general construction shown in said application, and is preferably provided with suitable passages whereby not only may I control the flow of fluid under pressure, such as compressed air, in order to admit such fluid into a cylinder at opposite sides of the piston therein, thereby to move said piston and hence the rudder to starboard or to port, but I may also admit, when desired, fluid under pressure to control the position indicating mechanism. In a previous application filed by me, Serial No. 756,273, I have disclosed a movable body, such as a vessel, having thereon a source of light and cooperating means, such as a gyroscope, for maintaining or positioning the light so that it is invisible to an enemy but visible to an observer at the control station. In the present application, I have disclosed position indicating means having a visible surface, the position of which surface may be varied, preferably by radiant energy, from the control station, so that such position indicating means may be observable only periodically or at the desire or determination of the operator at the control station. Such position indicating means may be of any suitable character, but preferably I provide one or more vanes which, when in indicating position, may be presented substantially broadside to the observer, so that the position of the vessel or other body may be determined. Preferably I employ means whereby when it is not desired to determine the position or direction of movement of the body, the said position indicating means is rendered substantially invisible or difficult of visual inspection or study.

In Figs. 3 to 6 inclusive, wherein I have represented one form of position indicating mechanism, I have indicated the deck of the vessel at 16. Rising therefrom are a series of uprights 17, here shown as four in number, arranged in suitable relation and connected at intervals by encircling bands or rings 18. Positioned within the space circumscribed by said bands or rings 18, I mount in suitable guides or bearings, a vertical shaft 19, the lower end of which extends through an opening in the deck and into a cylinder 20, the head 21 of which is secured at 22 to the under side of the deck. The said shaft 19 is provided at its lower end within the cylinder 20 with a piston head 23 reciprocable within the cylinder. At suitable intervals the shaft 19 has fast thereon collars 24, extending from each of which are parallel arms 25 having mounted therein the double cranked portion 26 of an arm 27, 27 carrying at its outer ends a pair of vanes 28, 28 of any suitable extent and character. The preferably radially extending portions of the arms 27, 27 are mounted for rotative movement at 29, 29 in the corresponding ring or band 18, whereby when rocking movement is imparted to the crank portion 26 of said arm, the vanes are turned through preferably ninety degrees, so that the surfaces thereof may be presented substantially broadside to the distant observer, or may be presented edgewise to him, in which latter case the vanes are substantially invisible to the observer as well as to the enemy.

Any suitable means may be employed to impart movement to said vanes 28. In any suitable manner, I impart axial movement to the shaft or piston rod 19. Preferably, however, I provide the rotary valve 30, to which I have referred, and connect a suitable by-pass or other passage thereof by pipe 31 to the cylinder 20, whereby fluid under pressure from any suitable reservoir may be admitted into the cylinder before the piston head 23, so as to elevate the shaft or piston rod 19 and thereby to turn each of the vanes through substantially ninety degrees and to position them broadside to the observer, as indicated in Figs. 3 and 5. Any suitable means may be provided to return said vanes to edgewise position, but preferably for the purpose I employ a spring 32 coiled about the shaft or piston rod 19 above the piston head 23 thereof. The rotary valve 30 may be turned step by step in any suitable manner, it being preferably such that it is successively and alternately turned to active and neutral positions. Herein for the purpose I have represented the valve as having loose thereon a gear 33 provided with a pawl 34 adapted to engage the teeth of a ratchet 35 fast upon the spindle 36 of said valve, so that the valve may be rotated step-by-step in one direction only. Meshing with the gear 33 is a rack 37 upon the piston rod 38 mounted within a suitable cylinder 39 and provided therein with a piston head 40. The piston rod 38 is adapted to be moved in the direction of the arrow adjacent thereto by motive fluid, such as compressed air, admitted through a pipe 41 from any suitable reservoir. The admission of fluid into the cylinder 39 through the pipe 41 is controlled by a valve 42 formed upon or connected with the solenoid core 15, said valve having an admission port 43 and an exhaust port 44. When the solenoid 14 is energized, the core 15 is moved in the direction of the arrow adjacent thereto, so as to bring the port 43 into register with the port 45 in the wall of the cylinder 39, so as to admit motive fluid into said cylinder, and thereby through the rack 37 to rotate the rotary valve through preferably ninety degrees. Upon de-energization of the solenoid, it is reurned to the position indicated in Fig. 3, whereby the exhaust port 44 is brought into register with the exhaust port 46 in the wall of the cylinder 39. Encircling the piston rod 38 within the cylinder 39 is a coil

spring 47 by means of which the piston rod 38 is returned to the position indicated in Fig. 3.

While the vanes 28 may be of any suitable character, and while any desired number thereof may be employed, I preferably provide a series of pairs thereof which are herein represented as encircling the upright 17 in substantially helical order. I have herein represented at the upper end of the uprights 17 a first pair of vanes at A and a second pair of vanes at *a* positioned at ninety degrees from the vanes A. These two pairs of vanes pertain to two series and each succeeding pair of vanes of each series is positioned at a suitable angle circumferentially in advance of the last preceding pair of vanes of that series. For example and as herein indicated in Fig. 3, the pair of vanes A′ are advanced about thirty degrees with relation to the vanes A, and the pair of vanes *a′* are advanced thirty degrees with respect to the pair of vanes *a*, and so on throughout the two series. As herein represented, each series of vanes twice encircles the uprights 17. Other suitable arrangement of vanes or visible surfaces may, however, be employed instead.

Preferably the vanes of the two series are contrastingly colored; for example, the vanes of the series A, A′ may be colored white and those of the vanes *a*, *a′* may be colored black, thus rendering said vanes, or certain of them, readily accessible in any light when the vanes are turned into the position indicated in Fig. 3. When the observer at the control station wishes to determine the position or course of the vessel, he sends a suitable impulse or series of impulses, thereby to turn the rotary valve 30 into such position that motive fluid is admitted through the pipe 31 into the cylinder 20, whereby during the period of continuation of said impulse or impulses, the vanes are observably positioned.

From the foregoing description, it will be evident that I have provided means whereby at any desired time the position indicating mechanism upon the vessel may be rendered visible, preferably momentarily only, thus affording the enemy, who is not anticipating the movement of the position indicating means, substantially no opportunity for observation thereof.

Having thus described one illustrative embodiment of my invention, I desire it to be understood that although specific terms are employed, they are used in a generic and descriptive sense and not for purposes of limitation, the scope of the invention being set forth in the following claims.

Claims:

1. A system for the control of moving bodies by radiant energy, comprising in combination a movable body provided with a visible signal carried thereby and movable with respect thereto about a substantially horizontal axis to vary the effective visibility of said signal, steering means carried by said body, and means responsive to radiant energy to control said steering means and to move said signal about said axis.

2. The combination with a movable body of steering means carried thereby, a plurality of signals carried by said body and rotatable with respect thereto about a plurality of axes respectively to vary the effective visibility of said signals by varying the areas of the horizontal projections of said signals on a vertical plane, and means responsive to radiant energy to control said steering means and to move said signals about said axes said axes being arranged in intersecting vertical planes.

3. The combination with a movable body, of steering means carried thereby, a plurality of signals carried by said body and rotatable with respect thereto about a plurality of axes respectively to vary the effective visibility of said signals from a given point by varying the horizontal projections of said signals upon a vertical plane, said axes being fixed with respect to said body and being normally substantially horizontal, and means responsive to radiant energy for controlling said steering means and rotating said signals about said axes.

4. The combination with a movable body of steering means carried thereby, a plurality of signals carried by said body and rotatable with respect thereto about a plurality of axes respectively to vary the effective visibility of said signals from a given point by varying the horizontal projections of said signals upon a vertical plane, said axes being fixed with respect to said body and being normally substantially horizontal, and means responsive to radiant energy for controlling said steering means and for rotating said signals about said axes simultaneously.

5. The combination with a movable body, of steering means carried thereby, a guiding signal carried by said body, means responsive to radiant energy and operable to control said steering means and to vary the effective visibility of said signal.

6. The combination with a movable body, of steering means carried thereby, a guiding signal carried by said body, and means responsive to radiant energy and operable to control said steering means and to vary the effective visibility of said signal from a point substantially in horizontal alinement to said signal.

7. The combination with a movable body, of steering means carried thereby, a guiding signal carried by said body and movable with respect thereto, and means responsive

to radiant energy for controlling said steering means and for varying the effective visibility of said signal from a given point substantially in horizontal alinement therewith.

8. The combination with a movable body, of steering means carried thereby, a visible guiding signal carried by said body and movable with respect thereto to vary the horizontal projection of said signal upon a vertical plane, and means responsive to radiant energy for guiding said body and for controlling said signal to vary the effective visibility of said signal from given points substantially in horizontal alinement with said signal.

In testimony whereof, I have signed my name to this specification, in the presence of two subscribing witnesses.

JOHN HAYS HAMMOND, JR.

Witnesses:
F. J. BEHR,
JNO. P. KOEHLER.