Feb. 6, 1962

W. WELKOWITZ

3,019,661

ULTRASONIC TRANSDUCER AND IMPEDANCE MATCHING DEVICE THEREFOR

Filed April 26, 1956

Fig. 1.

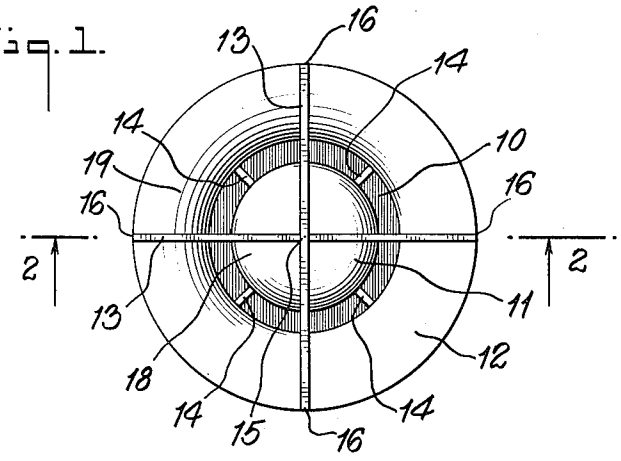

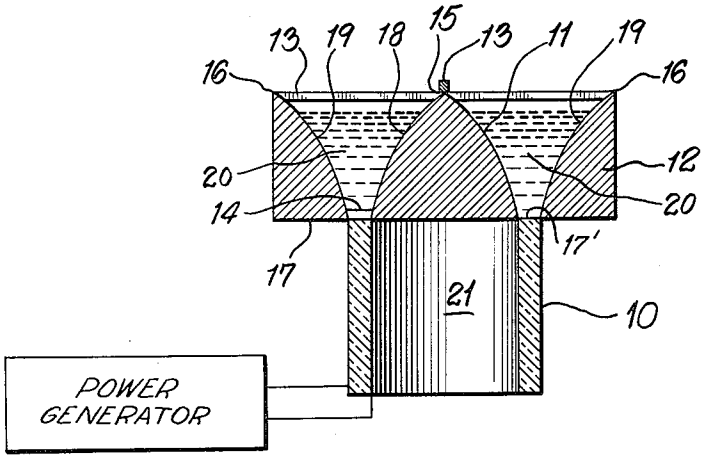

Fig. 2.

INVENTOR.
WALTER WELKOWITZ
BY
Cyrus D. Samuelson
ATTORNEY

United States Patent Office

3,019,661

Patented Feb. 6, 1962

3,019,661

ULTRASONIC TRANSDUCER AND IMPEDANCE MATCHING DEVICE THEREFOR

Walter Welkowitz, Metuchen, N.J., assignor to Gulton Industries, Inc., Metuchen, N.J., a corporation of New Jersey

Filed Apr. 26, 1956, Ser. No. 580,882
5 Claims. (Cl. 74—1)

My invention relates to ultrasonic transducers and in particular to those ultrasonic transducers which match a ring to a flat face, so that it is thereby possible to obtain uniform vibration over an area which is much larger than the area of the surface of the driving element.

Various methods and techniques for increasing the radiating area of ultrasonic transducers have been employed up to now. It has been necessary to use large discs or other shapes with large areas in order to produce uniform vibration over a large area and up to now, it has not been possible to use ring-type vibrating driving elements when it was necessary to produce vibration over a relatively large area.

Accordingly, it is a principal object of my invention to provide an ultrasonic transducer wherein it is possible to match a small area to a much larger area.

It is a further object of my invention to provide an ultrasonic transducer wherein it is possible to obtain greater transfer of energy from the vibrating driving element than is possible with driving elements of comparable dimensions.

It is a still further object of my invention to provide an ultrasonic transducer wherein the vibrating driving element is in contact with the ultrasonic transmission medium.

Other objects and advantages of my invention will be apparent during the course of the following description.

In the accompanying drawings forming a part of this application, and in which like numerals are employed to designate like parts throughout the same,

FIGURE 1 is a plan view of a preferred embodiment of my invention, illustrating an impedance matching horn affixed to the driving transducer and in which the medium in which the waves are to be propagated is in contact with an end of the driving transducer, and

FIGURE 2 is a cross-sectional view along the line 2—2 of FIGURE 1.

In the drawings, wherein, for the purpose of illustration, is shown a preferred embodiment of my invention, the numeral 10 designates the vibrating, driving element. Elements 11 and 12 are walls of high acoustic resistance compared to that of the liquid and serve to contain the acoustic wave within the liquid space between them. Elements 11 and 12 are held in place by bars 13 and 14. Both bars 13 are affixed to each other and to element 11 at point 15 and are affixed to element 12 at points 16. Bars 14 are affixed to elements 11 and 12 along end 17 and element 10 is suitably bonded to bars 14 and elements 11 and 12. 18 and 19 designate the curves which generate the surfaces of revolution of elements 11 and 12 respectively. The liquid space between the walls of elements 11 and 12 is designated as 20 and the air space within cylinder 10 is designated as 21. Elements 11 and 12 together constitute a matching section which improves the matching between cylinder 10 and the large circular area 15—16.

Element 10 is bonded to elements 11 and 12 and to bars 14 by means of a high strength thermo-setting plastic adhesive of epoxy resin having a high compliance. The adhesive is applied between elements 10 and 11 and 10 and 12 along the inner and outer circumferences of element 10. I prefer to fabricate element 10 of a polarized electrostrictive material composed largely of barium titanate but any other material or type of driving element

which may be fabricated into a hollow cylinder and driven in the mode parallel to the axis of the cylinder may be employed.

My invention permits the user to obtain good matching from the small ring at the end of element 10 to the large circular area whose radius is 15—16. Uniform acoustical output is obtained over this area and because of the improved impedance matching, it is possible to take more energy from element 10. The liquid which enters space 20 is in contact with element 10. The overall matching is improved because the transmission medium is in direct contact with the active element without an intervening coupling medium which does not match the acoustic resistance of the driving element or the transmission medium.

In operation, devices of my invention are placed in the liquid so that end 17' of element 10 is in contact with the liquid and the balance of element 10 is in air. Element 10 is driven by the usual power generator 22 through its electrodes (not shown) so that element 10 vibrates in longitudinal mode parallel to its axis. The vibration of element 10 causes the liquid in space 20 to vibrate which thereby results in an ultrasonic vibration being emitted across the area whose radius is 15—16.

If it is necessary to submerge the complete combination in the liquid, it is necessary to enclose element 10 by suitably encasing it in a liquid-proof container which is affixed to element 12 at end 17. Devices of my invention may be utilized for subaqueous signalling by attaching them to the hull of a vessel such that element 11—12 is in the water, edge 17' of element 10 is in contact with the water and element 10 is within the vessel. This can be accomplished most readily by affixing the device to the hull along end 17 of element 12.

By way of example and without limitation of the scope of my invention, I have found that excellent matching is obtained when curve 18, generating the surface of revolution of element 11, is of the form $y=y_0e^{ax}$ and curve 19, generating the inner surface of revolution 12, is the mirror of 18. Similarly excellent results have also been obtained when curve 18 is of the form

$$y=y_0\left(1+\frac{x}{x_0}\right)$$

and curve 19 is its mirror and when curve 18 is of the form $y=y_0 \cosh ax$ and curve 19 is its mirror. In these formulae x is distance along axis, y is distance away from axis, e is an exponential number, and a is a constant. Other surfaces will also be equally effective. The outer surface of revolution of element 12 is a cylindrical surface as illustrated in the figures but other surfaces may be used so long as the circumferential edge is obtained and there is a substantial solid area at end 17 of element 12. I prefer to form elements 11 and 12 of brass or any other solid material whose acoustic resistance is high compared to that of the liquid in space 20.

As an example, for a unit operating at a frequency of 40 kc., the driving element can be approximately 2" long, 2¼" outside diameter and ¼" thick. Elements 11 and 12 can be approximately 1½" long, the outside diameter of element 12 can be approximately 4", the diameter of element 11 at the driving element then is 1¾" and the inside diameter of element 12 at the driving element is 2¼". My invention may be used for frequencies down to 10 kc. and up to 200 kc. and the lengths vary in accordance with the formula

$$l=\frac{80}{f}$$

where l is in inches and f is in kilocycles, for the barium

titanate driving element and in accordance with the formula

$$l=\frac{60}{f}$$

where l is in inches and f is in kilocycles, for elements **11** and **12**.

While I have described my invention by means of specific eamples and in a specific embodiment, I do not wish to be limited thereto, for obvious modifications will occur to those skilled in the art without departing from the spirit of my invention or the scope of the subjected claims.

Having thus described my invention, I claim:

1. An ultrasonic transducer comprising a hollow cylindrical, polarized electrostrictive, electromechanically sensitive body, a matching section at one end of said electromechanically sensitive body and attached thereto by a high strength, thermo-setting adhesive of low compliance; power generating means; said matching section comprising an inner solid section, an outer solid section in spaced relationship with said inner solid section and means for maintaining said spaced relationship between said inner solid section and said outer solid section; the periphery of one end of said inner solid section being in contact with the edge of the inner surface of said electromechanically sensitive body, the surface of said inner solid section being a surface of revolution terminating in a point opposite said end in contact with said electromechanically sensitive body, the inner surface of said outer solid section being a surface of revolution greater in area than and mirroring the surface of said inner solid section, the outer surface of said outer solid section being a cylindrical surface, the periphery of one end of said inner surface of said outer solid section being in contact with the edge of the outer surface of said electromechanically sensitive body; said electromechanically sensitive body being vibrated parallel to its axis by said power generating means.

2. An ultrasonic transducer as described in claim 1 wherein the curve generating said surface of revolution of said inner solid section is of the form $y=y_0e^{ax}$, where x is distance along axis, y is distance away from axis, e is an exponential number, and a is a constant.

3. An ultrasonic transducer as described in claim 1 wherein the curve generating said surface of revolution of said inner solid section is of the form

$$y=y_0\left(1+\frac{x}{x_0}\right)$$

where x is distance along axis, and y is distance away from axis.

4. An ultrasonic transducer as described in claim 1 wherein the curve generating said surface of revolution of said inner solid section is of the form $y=y_0 \cosh ax$, where x is distance along axis, y is distance away from axis, and a is a constant.

5. An ultrasonic transducer as described in claim 1 wherein said electromechanically sensitive body is composed largely of barium titanate.

References Cited in the file of this patent

UNITED STATES PATENTS

1,380,869	Fay	June 7, 1921
2,005,741	Hayes	June 25, 1935
2,044,807	Noyes	June 23, 1936
2,102,668	Ballantine	Dec. 21, 1937
2,477,596	Gravley	Aug. 2, 1949
2,565,159	Williams	Apr. 21, 1951
2,607,858	Mason	Aug. 19, 1952
2,616,223	Jonker	Nov. 4, 1952
2,725,219	Firth	Nov. 29, 1955
2,748,298	Calosi et al.	May 29, 1956

FOREIGN PATENTS

852,150	France	Jan. 24, 1940