Office de la Propriété Intellectuelle du Canada
Un organisme d'Industrie Canada

Canadian Intellectual Property Office
An agency of Industry Canada

CA 2162472 C 2008/09/16

(11)(21) 2 162 472

(12) BREVET CANADIEN
CANADIAN PATENT

(13) C

(86) Date de dépôt PCT/PCT Filing Date: 1994/04/05
(87) Date publication PCT/PCT Publication Date: 1994/11/24
(45) Date de délivrance/Issue Date: 2008/09/16
(85) Entrée phase nationale/National Entry: 1995/11/08
(86) N° demande PCT/PCT Application No.: US 1994/003762
(87) N° publication PCT/PCT Publication No.: 1994/026926
(30) Priorité/Priority: 1993/05/14 (US08/062311)

(51) Cl.Int./Int.Cl. *C12N 1/20* (2006.01),
C12M 1/16 (2006.01), *C12Q 1/04* (2006.01)

(72) Inventeurs/Inventors:
MACH, PATRICK A., US;
HESSELROTH, KAREN E., US;
ADAMS, CARL A., US;
SCHWAB, DEBRA L., US

(73) Propriétaire/Owner:
MINNESOTA MINING AND MANUFACTURING COMPANY, US

(74) Agent: SMART & BIGGAR

(54) Titre : MILIEU DE CULTURE POUR LE COMPTAGE RAPIDE DES BACTERIES COLIFORMES
(54) Title: CULTURE MEDIUM FOR RAPID COUNT OF COLIFORM BACTERIA

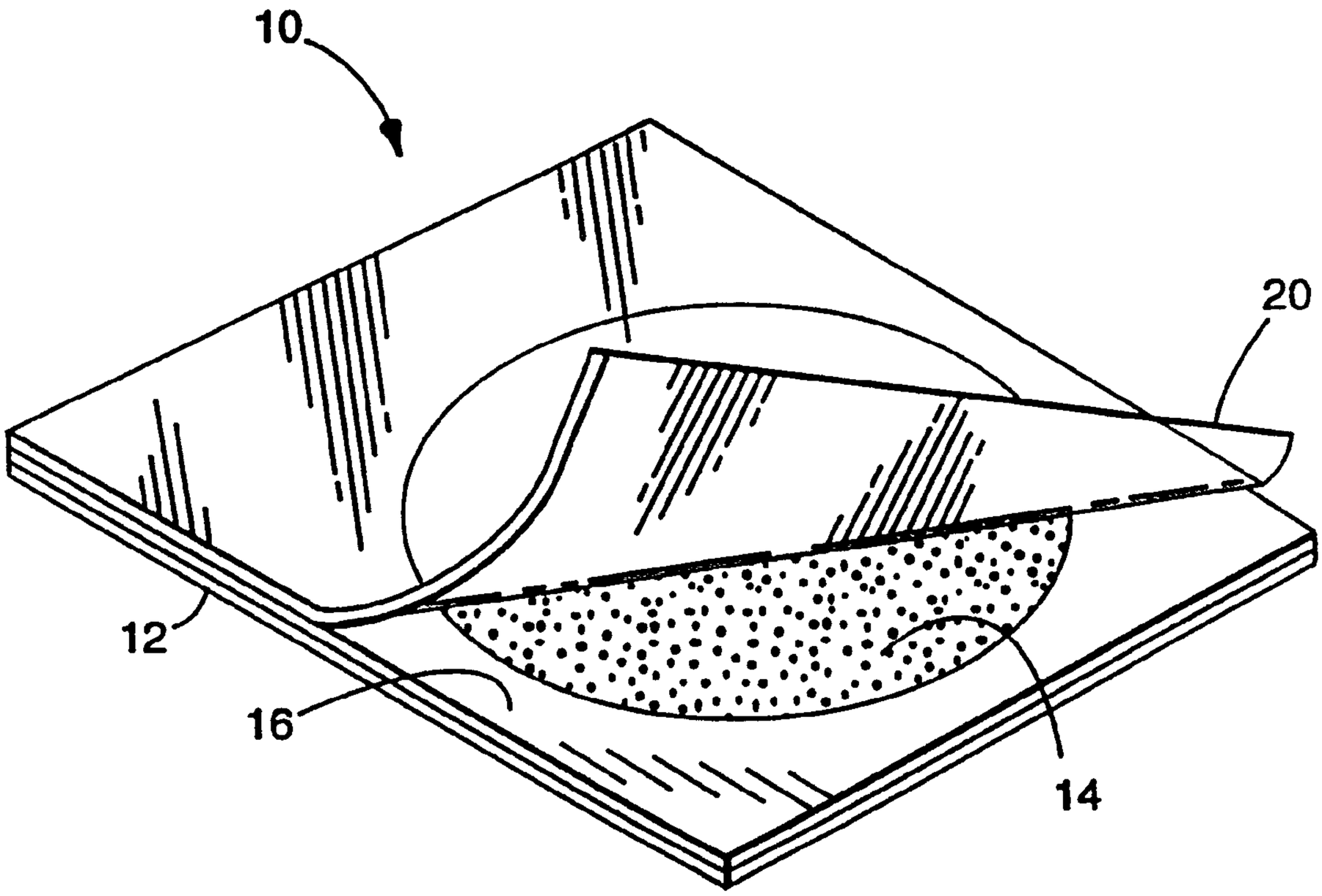

(57) Abrégé/Abstract:
This invention generally relates to products and processes used to determine the presence of bacteria in a sample and particularly relates to a culture medium which may be used in products and processes to allow early detection and count of coliform bacteria. The bacterial culture medium which facilitates the early detection and count of coliform bacteria is a mixture of tryptose, lactose, sodium chloride, bile salts, guar gum and an excess amount of phenol red sufficient to provide a high concentration of phenol red in close proximity to the growing bacteria in order to allow detection and count of the growing bacteria in less than 12 hours.

PCT WORLD INTELLECTUAL PROPERTY ORGANIZATION
International Bureau

INTERNATIONAL APPLICATION PUBLISHED UNDER THE PATENT COOPERATION TREATY (PCT)

(51) International Patent Classification 5 :
C12Q 1/04, C12M 1/16, C12N 1/20

A1

(11) International Publication Number: **WO 94/26926**

(43) International Publication Date: 24 November 1994 (24.11.94)

(21) International Application Number: PCT/US94/03762

(22) International Filing Date: 5 April 1994 (05.04.94)

(30) Priority Data:
08/062,311 14 May 1993 (14.05.93) US

(71) Applicant: MINNESOTA MINING AND MANUFACTURING COMPANY [US/US]; 3M Center, P.O. Box 33427, Saint Paul, MN 55133-3427 (US).

(72) Inventors: MACH, Patrick, A.; P.O. Box 33427, Saint Paul, MN 55133-3427 (US). HESSELROTH, Karen, E.; P.O. Box 33427, Saint Paul, MN 55133-3427 (US). ADAMS, Carl, A.; P.O. Box 33427, Saint Paul, MN 55133-3427 (US). SCHWAB, Debra, A.; P.O. Box 33427, Saint Paul, MN 55133-3427 (US).

(74) Agents: BUSSE, Paul, W. et al.; Minnesota Mining and Manufacturing Company, Office of Intellectual Property Counsel, P.O. Box 33427, Saint Paul, MN 55133-3427 (US).

(81) Designated States: AU, BR, CA, CN, JP, RU, European patent (AT, BE, CH, DE, DK, ES, FR, GB, GR, IE, IT, LU, MC, NL, PT, SE).

Published
With international search report.

2162472

(54) Title: CULTURE MEDIUM FOR RAPID COUNT OF COLIFORM BACTERIA

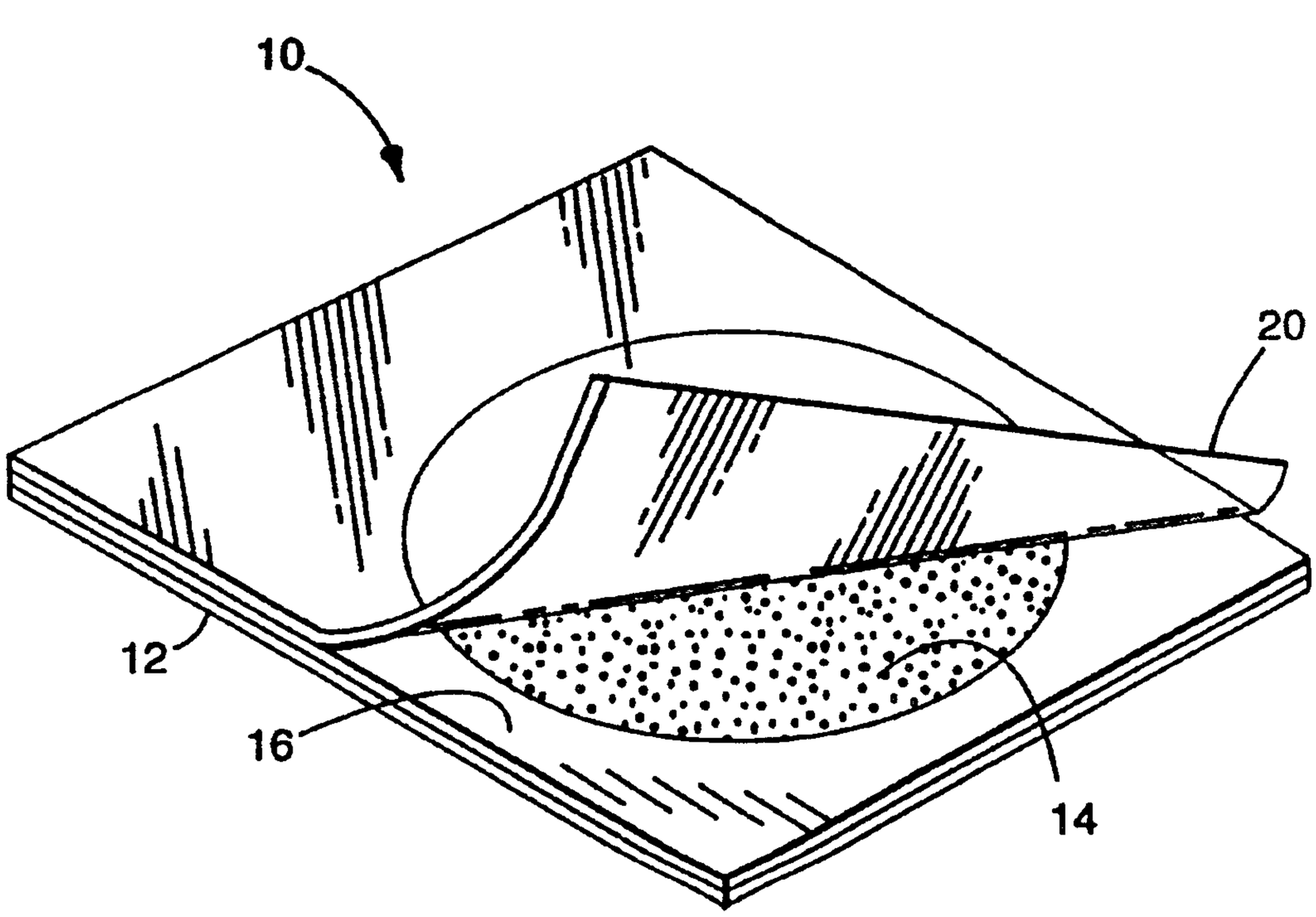

(57) Abstract

This invention generally relates to products and processes used to determine the presence of bacteria in a sample and particularly relates to a culture medium which may be used in products and processes to allow early detection and count of coliform bacteria. The bacterial culture medium which facilitates the early detection and count of coliform bacteria is a mixture of tryptose, lactose, sodium chloride, bile salts, guar gum and an excess amount of phenol red sufficient to provide a high concentration of phenol red in close proximity to the growing bacteria in order to allow detection and count of the growing bacteria in less than 12 hours.

60557-5119

CULTURE MEDIUM FOR RAPID COUNT OF COLIFORM BACTERIA

This invention generally relates to products and processes used to determine the presence of bacteria in a sample and particularly relates to a culture medium which may be used in products and processes to allow a rapid count of coliform bacteria.

BACKGROUND

Classical methods for determining the presence and number of bacteria in a sample are time consuming, tedious and labor intensive. Typically, a technician must prepare reagents and nutrients, mix the nutrients with agar, heat the mixture, pour the mixture into a petri dish, allow the agar to gel, obtain a test sample, dilute the test sample, add an aliquot of the diluted sample to the agar, incubate the inoculated plate for 24-48 hours and finally count the number of growing bacterial colonies in the petri dish. Products and processes which reduce the preparation time and which allow an earlier, rapid count of the bacteria would clearly be welcomed by those working in this field.

One example of a product which greatly simplifies the above preparation time is a dry culture device for growing microorganisms that is described in U.S. Patent 4,565,783 to Hansen et al. In a typical device reported by Hansen et al., a cold-water soluble dry powder containing a gelling agent and microbial growth nutrients is coated on a waterproof substrate. A transparent, read-through cover sheet coated on a surface with an acrylate adhesive containing an indicating dye and powdered gelling agent are attached to the coated substrate.

When the device is used, a predetermined amount of an aqueous sample is typically placed in contact with the coated substrate and the cover sheet is placed over the sample and substrate. The aqueous sample hydrates the soluble dry powder which then forms a gelled medium capable of sustaining microbial growth. During the growth period, the indicator dye adhered to the cover sheet reacts in the presence of viable microorganisms to give a detectable response that allows visualization of bacterial colonies which are grown on the culture device. A dry culture device based on the report of Hansen et al. is commercially available as PETRIFILM* plates (Catalog No. 6400, 3M, St. Paul, MN).

*Trade-mark

2162472

The dry culture devices of Hansen et al. are much simpler to use than conventional gelled agar medium/petri dish systems because there is no need for the user to heat and mix the growth medium, agar and other reagents and then add the mixture to petri dishes or pour plates. In addition, the devices of Hansen et al. are compact and easily disposed of and therefore are easier and safer to use.

In spite of the many advantages that the Hansen et al. devices have over conventional types of culture systems, the inoculated thin film plates must still be incubated for 24-48 hours before the number of bacteria may be determined. The ability to detect the presence or determine the number of bacteria at an earlier time may be very valuable in many circumstances. For example, earlier detection and rapid count of bacteria is important in the food industry. At the present time, the determination of bacteria only after an incubation time of 24-48 hours requires processors to delay distribution of food products and may allow the production of large amounts of contaminated products. Earlier detection of bacteria in food products would allow the processor to release food products for distribution at an earlier time period because contamination or lack of contamination could be established earlier. In addition, a processor would be able locate and correct a source of bacterial contamination without having to discard large amounts of contaminated products. Thus, detection of bacterial contamination in less than 24-48 hours would be extremely beneficial to food product producers.

Although the food industry would clearly benefit by determining bacterial contamination at an earlier time, other industries would also welcome the opportunity to detect bacteria more quickly. A need exists for products and processes which allow the early detection and rapid count of coliform bacteria.

SUMMARY OF THE INVENTION

This invention overcomes the deficiencies of current products and processes referred to above by providing products and processes which allow the early detection and rapid count of coliform bacteria. One embodiment of the present invention is a bacterial culture medium which facilitates the early detection and rapid count of coliform bacteria growing in the medium. The medium is a mixture of tryptose, lactose, sodium chloride, bile salts, guar gum and an excess amount of phenol red sufficient to provide a high concentration of phenol red in close proximity to the growing bacteria in order to allow detection and count of the growing bacteria in less than 12 hours.

A preferred liquid culture medium contains between about 10-20 g/l tryptose, 2.5-7.5 g/l lactose, 2.5-7.5 g/l sodium chloride, 1.35-1.65 g/l bile salts, 2.5-7.5 g/l guar gum and 0.16-5.0 g/l phenol red. A particularly preferred liquid culture medium contains about 15 g/l tryptose, 5 g/l lactose, 5 g/l sodium chloride, 1.5 g/l bile salts, 5 g/l guar gum and 1.25 g/l phenol red.

The culture medium of this invention may be used in broths, in agar or in thin film devices such as PETRIFILM plates. When used in PETRIFILM plates the culture medium is coated onto a surface of the device and the medium is then dried. When the culture medium is in a dry state on a thin film, the medium contains about 4.8 mg/in^2 tryptose, 1.6 mg/in^2 lactose, 1.6 mg/in^2 sodium chloride, 0.5 mg/in^2 bile salts, 1.6 mg/in^2 guar gum and 0.4 mg/in^2 phenol red. When the dried medium is rehydrated the above listed components of the culture media are in the same concentrations that are in the preferred liquid culture media.

Another embodiment of this invention is a method for detecting the presence of coliform bacteria in a sample. To practice this method, an aliquot of the sample containing coliform bacteria is added to a culture medium comprising tryptose, lactose, sodium chloride, bile salts, and an excess amount of phenol red sufficient to provide a high concentration of phenol red in close proximity to the bacteria. The coliform bacteria are then grown in the presence of the culture medium and the presence of bacteria is determined by detecting the color change of the phenol red as the growing bacteria metabolize. Using this method, the detection and count of coliform bacteria is possible in less than about 12 hours and preferably in less than about 8 hours.

Detection of the coliform bacteria in the culture medium may be done visually or done using an instrument. A suitable instrument is described in U.S. Patent No. 5,510,246.

Still another embodiment of this invention is a device to detect coliform bacterial growth in a sample. A preferred device includes a self-supporting, waterproof substrate and a transparent cover sheet. The present culture medium is coated on the self-supporting, waterproof substrate and then dried in order to provide a high concentration of phenol red in close proximity to growing bacteria in order to allow detection and count of the growing bacteria in less than 12 hours. Detection of coliform bacteria growing

on the device is readily made (either visually or using an instrument) when the red color of the media changes to a yellow color in the presence of acidic bacterial metabolites typical of coliform bacteria.

In another alternative embodiment, the present culture medium also contains a second indicator, triphenyltetrazolium chloride. When used in the culture medium, this second indicator provides a confirmation of the early detection and rapid count of bacteria. More specifically, after the presence of coliform bacteria are detected by the color change of phenol red, the growing bacteria continue to produce acids. When enough growing, acid-producing colonies are present, the medium eventually completely changes color from red to yellow. After about 24 hours and when the medium has changed from red to yellow, it is possible to detect the color change of the triphenyltetrazolium chloride in the medium caused by growing bacteria colonies. In the presence of coliform bacteria, triphenyltetrazolium chloride changes to a red color. The color change of the triphenyltetrazolium chloride allows confirmation of the earlier counts associated with the color change of phenol red. This later confirmation is also aided by the presence of gas bubbles around the coliform bacteria.

When triphenyltetrazolium chloride is used in the culture medium, preferred amounts of this indicator in the culture media are between about 0.025-0.120 g/l, a more preferred amount is about 0.050 g/l. When triphenyltetrazolium chloride is used on a thin film device, the dried medium preferably contains about 0.02 mg/in^2 triphenyltetrazolium chloride.

According to one aspect of the present invention, there is provided a bacterial culture medium which facilitates early detection and count of coliform bacteria growing in the medium, comprising tryptose, lactose, sodium chloride, bile salts, guar gum and phenol red in a concentration greater than about 160 mg/l.

According to another aspect of the present invention, there is provided a method of detecting the presence of coliform bacteria in a sample, comprising the steps of adding an aliquot of the sample to a culture medium comprising tryptose, lactose, sodium chloride, bile salts, guar gum and phenol red in a concentration greater than about 160 mg/l; growing the bacteria in the presence of the culture medium; and detecting a color change of the phenol red as the growing bacteria metabolize in less than about 12 hours.

According to yet another aspect of the present invention, there is provided a device to detect coliform bacterial growth in a sample, the device consisting substantially of a self-supporting, waterproof substrate coated with a culture medium as described herein, a foam spacer and a transparent cover sheet.

BRIEF DESCRIPTION OF THE DRAWING

Figure 1 is an illustration of a device containing the culture medium of the present invention.

DETAILED DESCRIPTION

This invention provides products and processes which may be used to detect the presence of coliform bacteria in a sample in less than about 12 hours (coliform bacteria include lactose fermenting, gram-negative rods).

Although a variety of products and processes have been used to detect coliform bacteria, a detection and count time of less than 12 hours is significantly shorter than the detection times of conventional products or processes.

Early detection and rapid count of coliform bacteria in most samples has been problematic for a variety of reasons. In most cases, coliform bacteria present in samples have been stressed and are not growing at an optimal level. In order to provide for optimal growth (and thus allow early detection) the stressed bacteria must be provided a period of time to recover from induced stress. The present invention provides a medium which is believed to afford rapid recovery of coliform bacteria. This medium includes known reagents and nutrients which are commercially available. These reagents and nutrients include tryptose, lactose, sodium chloride, and bile salts which are available from Acumedia, Inc., Baltimore, MD. The medium also contains guar gum which is commercially available from Rhone-Poulenc, Inc., Kreuzlinger, Switzerland, phenol red which is commercially available from Sigma-Aldrich Corp., Milwaukee, WI, and triphenyltetrazolium chloride which is commercially available from AMRESCO, Solon, OH. The preferred reagents and materials are weighed and mixed using conventional aseptic procedures.

The present culture medium includes a pH indicator, phenol red. Phenol red is a known indicator which changes color from red to yellow in the presence of acid. As a bacterial colony grows,the colony produces metabolic acids which react with the indicator and produce yellow colored areas surrounding the colony. This indicator has been used in other culture media but is generally used in very small amounts, typically less than about 10-30 mg/l (Manual of Methods of General Bacteriology, page 440 (1981)) . Specifically, phenol red has been reported in several culture media at levels of between about 18-24 mg/l (BBL Manual of Products and Laboratory Procedures, page 131 (1973)). According to the present invention, however, the amounts of phenol red are substantially greater than the amounts of phenol red, or other indicators, that are generally used in reported culture media. For example, use of about a ten-fold excess of phenol red over amounts used in conventional media, more than 160 mg of phenol red per liter, provides early detection and rapid count benefits. Furthermore, use of about a thousand-fold excess over amounts used in conventional media, more than 1000 mg of phenol red per liter, provides enhanced color contrast and is the preferred concentration in the present medium.

Surprisingly, coliform bacteria appear to recover and grow extremely well in medium which contains such a large excess of phenol red and there is apparently no toxicity to the coliform bacteria at these concentrations.

As much as about 5000 mg of phenol red per liter, the upper limit of solubility for phenol red in water, has been found to be non-toxic to coliform bacteria. It may be that the large excess of phenol red serves to act as a buffer for the medium and therefore promotes recovery and/or growth because it is believed that coliform bacterial growth may be sensitive to pH. The use of amounts of phenol red which are sufficient to provide buffering capacity to the medium is not accepted practice because indicators are generally reagents that are used in amounts or are selected to provide no buffering capacity to a solution.

Another benefit of the ability to use excess amounts of phenol red in the medium in order to provide some buffering capability to the medium is the prevention of diffusion of metabolic acids in the medium. Uncontrolled diffusion of acids through the medium may allow the yellow colored areas which surround growing colonies to overlap or run together. When the yellow colored areas overlap or run together, the resulting colony counts are either difficult to obtain or inaccurate.

Another unexpected benefit of using a large excess of phenol red is that the contrast between the red color of phenol red in neutral or basic solutions and the yellow color of phenol red in the presence of acid is maximized. The maximum contrast between the red color of the medium and yellow color of the zones surrounding growing coliform bacteria allows visual detection of coliform bacteria at a much earlier time compared to the detection time of conventional products or processes.

In this specification, the phrase "excess amount of phenol red sufficient to cause a high concentration of phenol red in close proximity to the growing bacteria in order to allow detection and count of the growing bacteria in less than 12 hours" means a concentration of phenol red greater than about 160 mg/l which allows for the visualization or instrument detection of a color change from red to yellow caused by coliform bacterial metabolites.

Fig. 1 illustrates a thin film culture device suitable for use with the media of the present invention. Briefly, the device and the processes of making and using these types of culture devices is described in U.S. Patent No. 4,565,783.

The thin film culture device 10 includes a body member having a self-supporting, waterproof substrate 12. Substrate 12 is preferably a relatively stiff material made of a waterproof material that does not absorb water such as polyester, polypropylene, or polystyrene. Other suitable waterproof materials

include substrates such as paper containing a waterproof polyethylene coating. The upper surface of substrate 12 is coated with a layer of culture media 14 which is then dried to provide a dry medium on substrate 12. Alternatively, a layer of adhesive may be coated on substrate 12 of adhesive which serves to hold a culture medium which may be applied as a powder. The adhesive should be sufficiently transparent when hydrated to allow viewing of bacterial colonies growing on the surface of the substrate through the coated substrate. The adhesive should also be coated on the substrate in a thickness which allows the substrate to be uniformly coated with dry culture medium without completely embedding the media in the adhesive.

If the liquid culture medium of this invention is to be used in a dry form or as a dry powder, the reagents, nutrients and phenol red are dried. The culture medium of this invention may be readily dried by heating liquid medium in an oven about at 220°F until essentially all of the water in the liquid has evaporated. If the medium is heated after the water has evaporated, however, the medium begins to degrade.

A foam spacer 16 having a circular opening in the foam is adhered to the medium coated surface of substrate 12. The foam spacer which covers the periphery of substrate 12 defines the area which is to be inoculated with a sample and serves to prevent the sample from leaking from the substrate. In an alternate embodiment, a device may not include a sample-containing foam layer. In this device, the amount of sample is contained on the substrate by the components of the medium alone.

A cover sheet 20 is attached to one edge of an upper surface of the foam spacer 16. Cover sheet 20 is preferably made of a transparent film or sheet material in order to facilitate counting of bacterial colonies present on the substrate. In addition, cover sheet 20 is preferably impermeable to bacteria and water vapor in order to avoid the risk of contamination and deterioration of the components. A preferred material for use as a cover sheet 20 is biaxially-oriented polypropylene.

In use, a predetermined amount of inoculum, typically about one milliliter of inoculum, is added to the device illustrated in Fig. 1 by pulling back cover sheet 20 and adding an aqueous test sample or water to the middle of substrate 12. Cover sheet 20 is then replaced over substrate 12 and the inoculum is evenly spread on the substrate. A convenient tool to do this is a weighted circular template which also is used to confine the inoculum to a specific area of substrate 12. As the inoculum contacts and is spread on

substrate 12, the culture medium on substrate 12 hydrates to form a growth-supporting nutrient gel. The inoculated device is then incubated for a predetermined time after which the number of bacterial colonies growing on the substrate may be counted through the transparent cover sheet 20.

Although the use of the culture medium of this invention on a thin film device is described above, those of ordinary skill in the art will recognize that the culture media may be used in other culturing devices which are known in the art. For example, the culture medium may be used as a broth and used to grow bacteria in suspension or the culture media may be use to grow bacteria on known agar plates.

The following examples are intended to provide further details and embodiments related to the practice of the present invention. These examples are provided for illustrative purposes and should not be construed to limit the scope of the present invention which is defined in the appended claims.

Example 1 - Growth of Coliform Bacteria in Rapid Coliform Count Medium

This example illustrates that a preferred liquid medium of this invention (rapid coliform count medium, RCCM) may be used to grow coliform bacteria in a broth, in agar, or in a thin film plate. The medium used in this example contained 15 g/l tryptose, 5 g/l lactose, 5 g/l sodium chloride, 1.5 g/l bile salts, 5 g/l guar gum, 0.050 g/l triphenyltetrazolium chloride and 1.25 g/l phenol red (all components were commercially available from the sources listed above) which the exception that no triphenyltetrazolium chloride was used in the broth medium.

Various bacteria listed in Table 1, below, were initially grown for 18-24 hours in trypticase soy broth (Difco Laboratories, Inc., Detroit, MI) at 35°C. The bacteria listed in Table 1 were either purchased from Silliaker Laboratories, Chicago, IL (indicated by "s" after bacteria name) or were quality control isolates used by 3M Microbiology Products Laboratory, St. Paul, MN. Those of ordinary skill will recognize that equivalent strains or species of bacteria are commercially available or may be isolated using well known methods or processes.

After about 24 hours of growth in the trypticase broth, the growing cultures containing about 10^8-10^9 bacteria/ml were serially diluted about 10^6-10^7 fold in Butterfields Standard Methods Buffer (SMB, Fisher

Scientific, Minneapolis, MN). An aliquot of the diluted culture (about one ml) was used to inoculate a petri dish, a screw-cap glass tube or a PETRIFILM plate containing RCCM.

For growth in agar, the culture aliquots were added to petri dishes and were then overlaid with RCCM and agar (about 12 ml of medium containing about one vol./wt.% agar) and then incubated for 24 hours at 35°C.

For growth in a broth, the culture aliquots were added to the screw-cap tubes containing RCCM (about 10 ml) and a durham tube. The tubes were then capped and also incubated for 24 hours at 35 °C.

For growth on a thin film, a layer of RCCM was forced through a small orifice in order to cover a 7.5 mil polyester substrate film (Imperial Chemical industries, Willmington, DE) at room temperature. The covered polyester film was then dried for between about 1-20 minutes at about 200-250°F. An 18 mil styrofoam spacer sheet was cut to cover the polyester film and a circular opening was cut in the styrofoam spacer. One surface of the cut styrofoam spacer was coated with an isooctylacrylate/acrylamide pressure sensitive adhesive (96/4 wt.% ratio of acrylate to acrylamide) and the styrofoam sheet was adhered to the coated surface of the polyester film.

A transparent polypropylene film was cut to cover the polyester/styrofoam laminated film. One surface of the polypropylene film (1.6 mil, 3M, St. Paul, MN) was coated with an isooctylacrylate/acrylamide pressure sensitive adhesive (96/4 wt.% ratio of acrylate to acrylamide) and coated with a layer of guar gum (Rhone-Poulenc, Inc. Kreuzlinger, Switzerland). A layer of double-sided adhesive coated tape (3M, St. Paul, MN) was placed on one exposed edge of the styrofoam spacer and the gum-containing surface of the polypropylene film was adhered to the styrofoam spacer along one edge.

The culture aliquots (one ml) were placed in the opening of the styrofoam spacer, the polypropylene film was used to cover the inoculum, and the thin film was incubated for 24 hours at 35°C.

After incubation for 24 hours, the petri dishes, glass tubes and thin film plates were evaluated for the presence of acid zones which were identified as yellow areas on the red background of the plate or dish and/or for the presence of gas bubbles. Broth cultures were evaluated for change in color from red to yellow and for the presence of gas bubbles in the durham tubes.

The data listed in Table 1 below indicate that RCCM was selective for growing coliform bacteria.

TABLE 1

Bacteria	Inoculum (Cfu/TSA)	RCCM - broth		RCCM - Agar		RCCM - Thin Film		PETRIFILM CC plate	
		Growth	Acid/Gas	Growth	Acid	Growth	Acid/Gas	Growth	Acid/Gas
E. coli 565s	30	G	(+/+)	G	(+)	-		-	
E. coli 471s	66	G	(+/+)	G	(+)	-		-	
S. sap. 789s	43	NG	(-/-)	NG	(-)	NG		NG	
B. perm 1212s	10	NG	(-/-)	NG	(-)	NG		NG	
E. fecaelis EN1094	43	NG	(-/-)	NG	(-)	NG		NG	
S. aureus 50s	41	NG	(-/-)	NG	(-)	NG		NG	
E. fecaelis SF	39	NG	(-/-)	NG	(-)	NG		NG	
E. fecaelis 3M	37	NG	(-/-)	NG	(-)	NG		NG	
S. aureus 48s	117	NG	(-/-)	NG	(-)	NG		NG	
L. dulbreckii 914s	40	NG	(-/-)	NG	(-)	NG	(-/-)	NG	(-/-)
S. typhimurium 451s	95	G	(-/-)	G	(-)	G	(+/-)	G	(-/-)
Y. ent. 572s	93	G	(+/+)	G	(+)	G		G	
L. monocytog 23s	70	NG	(-/-)	G	(-)	NG		NG	
E. fecaelis 732s	20	NG	(-/-)	NG	(-)	NG		NG	
S. saintpaul 373s	49	G	(+/-)	G	(-)	ND	(-/-)	ND	(-/-)
P. vulgaris 760s	60	G	(+/-)	G	(-)	G		G	
E. coli 503s	42	G	(+/+)	G	(+)	ND		ND	
C. freundii 614s	29	G	(+/+)	G	(+)	ND		ND	
C. freundii 433s	27	G	(+/+)	G	(+)	ND		ND	
E. coli 563s	53	G	(+/+)	G	(+)	ND		ND	
K. pneu 26	49	G	(+/+)	G	(+)	ND		ND	
E. aerog 39	95	G	(+/+)	G	(+)	ND		ND	
E. agglomerans 44s	41	G	(+/+)	G	(+)	ND		ND	

TABLE 1 (cont.)

Bacteria	Inoculum (Cfu/TSA)	RCCM - broth		RCCM - Agar		RCCM - Thin Film		PETRIFILM CC plate	
		Growth	Acid/Gas	Growth	Acid	Growth	Acid/Gas	Growth	Acid/Gas
E. coli 555s	94	G	(+/+)	G	(+)	ND	(+/+)	ND	(+/+)
E. cloacae C5	98	G	(+/+)	G	(+)	G		G	
S. newport 347s	92	G	(+/-)	G	(+)	ND	(+/+)	ND	(+/+)
E. sakazaki C3	73	G	(+/+)	G	(+)	G	(+/+)	G	(+/+)
K. oxytoca C4	48	G	(+/+)	G	(+)	G	(+/+)	G	(+/+)
H. alvei C2	80	G	(+/+)	G	(+)	G	(+/+)	G	(+/+)
S. liquefaciens C1	75	G	(+/+)	G	(+)	G		G	
E. coli 561s	76	G	(+/+)	G	(+)	ND		ND	
C. freundii 17	96	G	(+/+)	G	(+)	ND		ND	
K. oxytoca 33	97	G	(+/+)	G	(+)	ND	(+/+)	ND	(+/+)
E. coli 149	80	G	(+/+)	NG	(-)	G		G	
E. fecaelis EN1062	70	NG	(-/-)	G	(+)	NG		NG	
E. coli 627s	86	G	(+/+)	G	(+)	ND		ND	
E. aggl 611s	136	G	(+/-)	G	(+)	ND		ND	
E. coli 633s	71	G	(+/+)	NG	(-)	ND		ND	
Blank	0	NG	(-/-)	NG	(-)	NG		NG	

G - growth
NG - no growth
ND - not determined
Gas - (-) no gas bubbles, (+) gas bubbles
Acid - (-) no acid zone, (+) acid zone

2162472

PCT/US94/03762

Example 2 - Concentration Effect of Phenol Red

This example indicates that excess amounts of phenol red, i.e. amounts of phenol red greater than about 160 mg/l provide early detection and count of coliform bacteria. In this example, various bacteria were quality control isolates used by 3M Microbiology Products Laboratory, St. Paul, MN. These bacteria included Serratia liquefaciens (C1 which was used at three different dilutions; about 25 bacteria/ml, 50 bacteria/ml and 75 bacteria/ml), Hafnia alvei (C2), Enterobacter sakazaki (C3), Klebsiella oxytoca (C4), Enterobacter cloacae (C5), and Escherichia coli (149 which was used at three different dilutions; about 25 bacteria/ml, 50 bacteria/ml and 75 bacteria/ml). Equivalent strains or species of bacteria would be readily recognized by those of ordinary skill in the art. The bacteria were grown and diluted as described in Example 1 and culture aliquots were added to thin film plates as described in Example 1 with the exception that the concentrations of phenol red in the medium coated on the polyester film varied from 0.04-2.5 g/l.

The data in Table 2, below, list the percentage of colonies which were counted at 12 hours compared to the number of colonies which were counted at 24 hours. The 24 hour count was made by identifying colonies which produced gas and which were detected by the color change of triphenyltetrazolium chloride. The data indicate that amounts of phenol red in excesses of 160 mg/l allowed consistent early detection and rapid count as well as provided faster quantification of acid producing bacteria.

TABLE 2

Concentration Effect of Phenol Red

bacteria strains / phenol red g/l	C1 25 bac/ml	C1 50 bac/ml	C1 75 bac/ml	C2	C3	C4	C5	149 25 bac/ml	149 50 bac ml	149 75 bac/ml
2.50	96.30	110.0	95.56	97.16	97.50	97.92	105.8	----	----	88.55 9 hr
1.25	97.06	103.5	95.83	94.07	106.0	97.22	57.59	----	107.8 10 hr	97.27 9 hr
0.63	118.8	107.7	102.6	98.79	102.2	95.28	100.0	101.2	----	106.8 9 hr
0.31	103.7	126.1	95.00	83.54	93.18	----	100.0	----	----	94.74 9 hr
0.16	97.22	107.4	88.70	----	----	----	100.0	100.0	----	----
0.08	103.6	----	93.06	----	96.00	----	100.0	----	----	----
0.04	100.0	----	71.88	----	104.8	----	93.62	----	----	----

60557-5119

Example 3 - Comparative Example

In one experiment, thin film plates containing the culture media of this invention (RCCM) were compared to commercially available PETRIFILM coliform count plates (3M, St. Paul, MN) and to conventional pour plates containing Violet Red Bile Agar.

Thin film plates containing RCCM were prepared as described in Example 1.

Aliquots used to inoculate the thin film plates were taken from milk samples available on request from the Dairy Quality Control Institute, Minneapolis, MN which were diluted as described in Example 1. For each different sample, aliquots (one ml) were added to three plates each having a different type of media and then the inoculated plates were incubated at 35 °C. Each of the inoculated plates were evaluated visually every hour.

In addition, both RCCM and the PETRIFILM thin film plates were evaluated every thirty minutes by imaging the plates with a camera at two different wavelengths. The images at both wavelengths were then digitized and stored electronically. The stored images were further processed by dividing the images of the two wavelengths and then subtracting the divided image from the divided image calculated from the images made thirty minutes earlier. This process of image analysis is described in U.S. Patent No. 5,510,246.

The detection and count of colony forming units from the three media were determined manually.

The data provided by the above described comparison are listed in Table 3 below. The data establish that the media of this invention allow earlier detection and count when compared to either of the other media.

TABLE 3

MEDIA	COLONY-FORMING UNITS/ML (duplicate plates)	TIME (HOURS)
Violet Red Bile Agar	41/31	24
PETRIFILM coliform count plates	15/15	24
RCCM (visual)	31/39	10
RCCM (instrument)	36/35	8

In another experiment, thin film plates containing the culture media of this invention were compared to commercially available PETRIFILM coliform count plates (3M, St. Paul, MN), to a modified PETRIFILM coliform count plate having either phenol red or neutral red (another commonly used indicator available from Sigma-Aldrich Corp., Milwaukee, WI) and to a thin film plate coated with a medium which was identical to RCCM except that phenol red was replaced with neutral red, a different commonly used indicator.

Thin film plates containing the different media and indicators were prepared as described in Example 1 and were inoculated with aliquots of diluted sample containing the bacteria listed in Table 4, below. The bacteria used in this example were used in Example 2, above. The data indicate the time needed to count one hundred percent of the colonies which where observed after 24 hours as detected by the color change of triphenyltetrazolium chloride and the formation of gas bubbles.

TABLE 4

Time to Achieve Count Equivalent to 24 Hour Count

bacteria / medium - indicator	C1	C2	C3	C4	C5	149
RCCM phenol red	9 hr	11 hr	12 hr	9 hr	12 hr	10 hr
RCCM neutral red	CNR	CNR	CNR	CNR	CNR	CNR
PCC phenol red	10 hr	10 hr	12 hr	8 hr	12 hr	9 hr
PCC neutral red	CNR	CNR	13 hr	CNR	CNR	CNR
PCC	CNR	CNR	CNR	CNR	CNR	CNR

CNR - counts not readable
24 hr determined by the formation of gas bubbles and color change of triphenyltetrazolium chloride

60557-5119

CLAIMS:

1. A bacterial culture medium which facilitates early detection and count of coliform bacteria growing in the medium, comprising tryptose, lactose, sodium chloride, bile salts, guar gum and phenol red in a concentration greater than about 160 mg/l.

2. The culture medium of claim 1, wherein the concentration of phenol red is greater than about 1000 mg/l.

3. The culture medium of claim 1 or 2, wherein the culture medium further comprises triphenyltetrazolium chloride.

4. The culture medium of claim 3, comprising about 10-20 g/l tryptose, 2.5-7.5 g/l lactose, 2.5-7.5 g/l sodium chloride, 1.35-1.65 g/l bile salts, 2.5-7.5 g/l guar gum, 0.025-0.120 g/l triphenyltetrazolium chloride, and 0.16-5.0 g/l phenol red.

5. A method of detecting the presence of coliform bacteria in a sample, comprising the steps of adding an aliquot of the sample to a culture medium comprising tryptose, lactose, sodium chloride, bile salts, guar gum and phenol red in a concentration greater than about 160 mg/l; growing the bacteria in the presence of the culture medium; and detecting a color change of the phenol red as the growing bacteria metabolize in less than about 12 hours.

6. The method of claim 5, wherein the culture medium further comprises triphenyltetrazolium chloride.

7. The method of claim 6, further comprising the step of confirming the presence of coliform bacteria in the

sample by detecting gas formation and a color change in the triphenyltetrazolium chloride.

8. The method of any one of claims 5 to 7, wherein the bacteria are grown in agar containing the culture medium.

9. The method of any one of claims 5 to 7, wherein the bacteria are grown in a suspension containing the culture medium.

10. A device to detect coliform bacterial growth in a sample, the device consisting substantially of a self-supporting, waterproof substrate coated with a culture medium according to claim 1 or 2, a foam spacer and a transparent cover sheet.

11. A device to detect coliform bacterial growth in a sample, the device consisting substantially of a self-supporting, waterproof substrate coated with a culture medium according to claim 3 or 4, a foam spacer and a transparent cover sheet.

12. The device of claim 11, wherein the triphenyltetrazolium chloride changes color in the presence of coliform bacteria after about 24 hours.

13. The device of any one of claims 10 to 12, wherein the phenol red changes color from red to yellow and wherein the color change is detected by an instrument.

SMART & BIGGAR

OTTAWA, CANADA

PATENT AGENTS

2162472

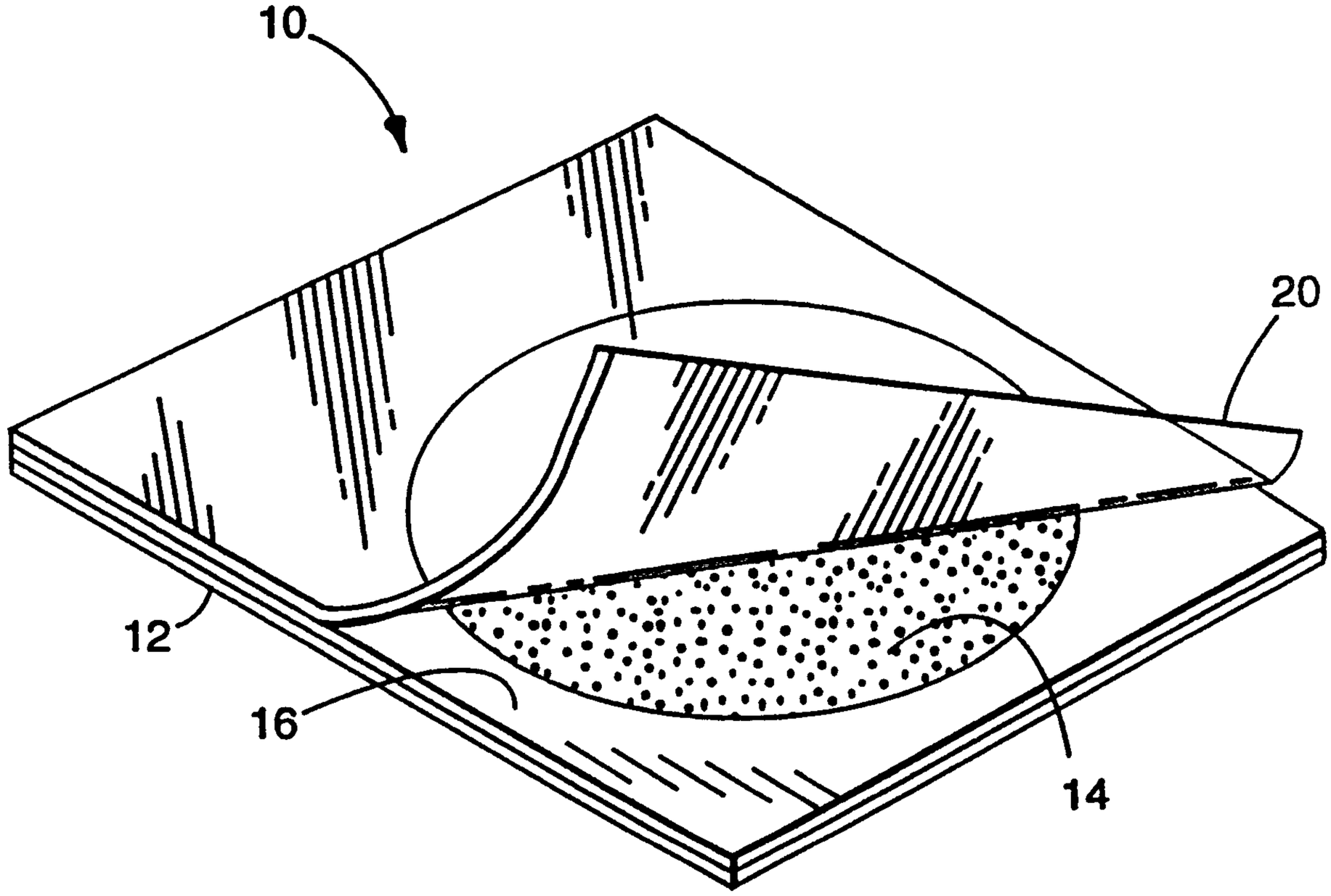

FIG.1

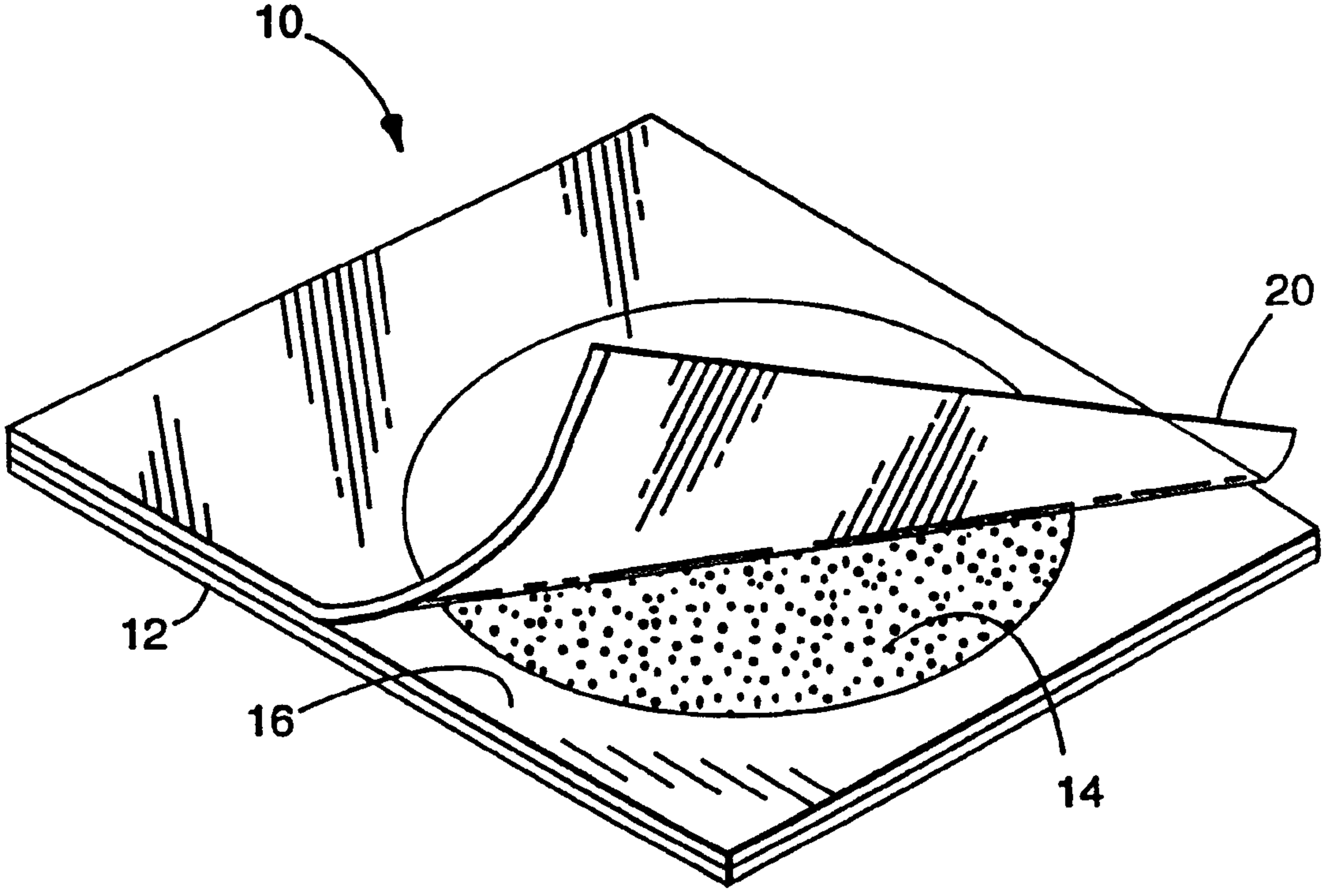
10
20
12
16
14