S. D. SHEPPERD.

ROLLER FOR COTTON GINS.

APPLICATION FILED JULY 14, 1911.

1,080,487. Patented Dec. 2, 1913.

Fig. 1.

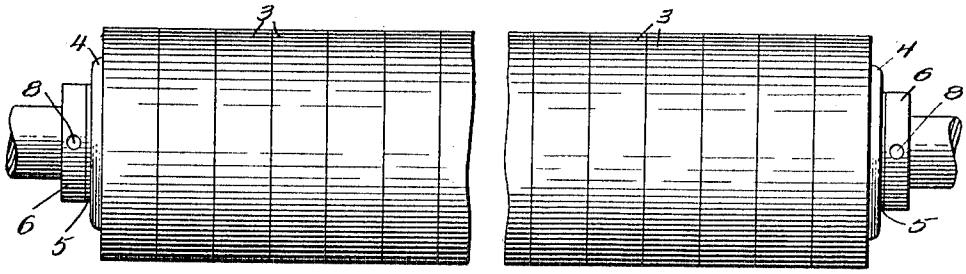

Fig. 2.

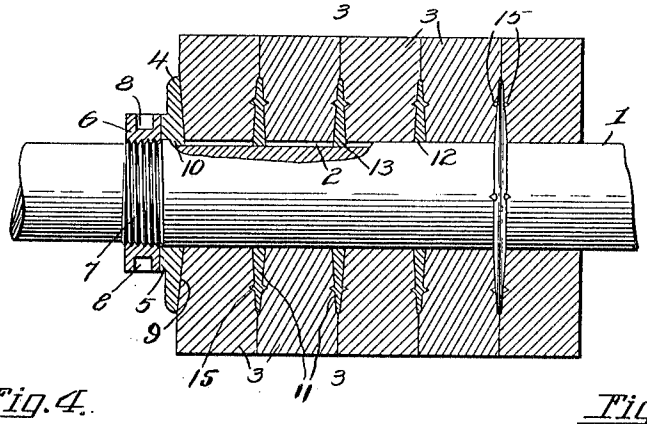

Fig. 4.

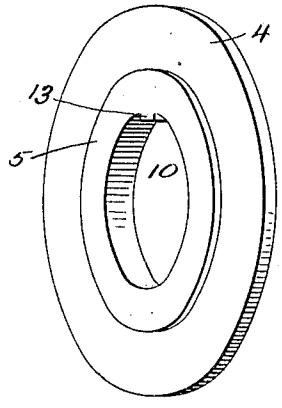

Fig. 3.

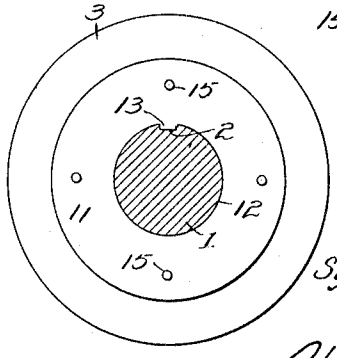

Fig. 5.

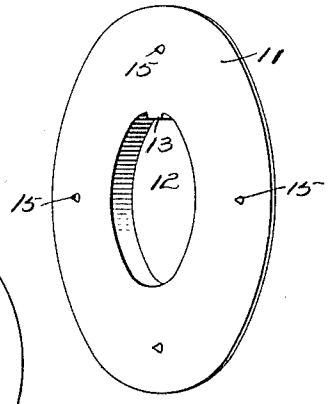

Witnesses

F. C. Gibson.

C. A. Hines.

Inventor

Sylvanus D. Shepperd

By Victor J. Evans

Attorney

COLUMBIA PLANOGRAPH CO., WASHINGTON, D. C.

UNITED STATES PATENT OFFICE.

SYLVANUS D. SHEPPERD, OF NEWARK, NEW JERSEY, ASSIGNOR TO SOUTHERN COTTON GIN COMPANY, A CORPORATION OF DELAWARE.

ROLLER FOR COTTON-GINS.

1,080,487. Specification of Letters Patent. Patented Dec. 2, 1913.

Application filed July 14, 1911. Serial No. 638,521.

To all whom it may concern:

Be it known that I, SYLVANUS D. SHEPPERD, a citizen of the United States, residing at Newark, in the county of Essex and State of New Jersey, have invented new and useful Improvements in Rollers for Cotton-Gins, of which the following is a specification.

This invention relates to rollers for cotton gins, and particularly to rollers of that type having a fiber-grasping surface formed of felt or like material.

In the manufacture of rollers of this character, it has heretofore been customary to employ a roller formed of a shaft or axle, a core of wood or other material, and a layer of felt applied to the core and forming the fiber-grasping surface. Owing to the fact that a fiber-grasping surface of felt of this construction is comparatively soft, weak and incapable of withstanding the strains of constant use, the surface of the roller rapidly becomes worn and unfit for use and must be discarded and a new surface applied.

The object of the present invention is to provide a roller in which the fiber-grasping surface is made up of a series of annular disks or sections of compact and durable felt adapted to readily withstand the wear and tear to which the ginning rollers are subjected, and which are therefore adapted to last a comparatively long period without renewal, whereby the cost of maintaining the rollers in condition for effective service is materially decreased.

A further object of the invention is to provide simple and effective means for firmly holding the disks clamped and assembled upon the shaft or axle of the roller, in such a manner as to permit ready removal of any or all of the disks for renewal or repairs when occasion requires.

The invention consists of the features of construction, combination and arrangement of parts hereinafter fully described and claimed, reference being had to the accompanying drawings, in which:—

Figure 1 is an elevational view of a ginning roller embodying my invention. Fig. 2 is a longitudinal section thereof, showing the roller partially broken away, in order that the parts may be shown more conveniently on an enlarged scale within the prescribed space. Fig. 3 is a cross section on the line 3—3 of Fig. 2. Fig. 4 is a view of one of the end clamping disks or heads. Fig. 5 is a similar view of one of the intermediate clamping disks or heads.

In carrying my invention into practice, I provide a roller comprising a shaft or axle 1 having a longitudinal key seat or groove 2, the body of the roller being formed of a series of annular disks 3, arranged side by side in abutting relation and constituting the body and fiber-grasping surface of the roller. These disks are formed of felt, of sufficient density and toughness to withstand considerable wear and tear, the opening of each disk being of just sufficient size for the passage of the shaft, whereby the disks are adapted to be applied and removed from either end of the shaft by slipping the same on to and off the shaft, as will be readily understood.

The series of disks are clamped in assembled position by annular end clamping plates or heads 4, arranged to bear against the outer surfaces of the end disks 3 of the series, each of said heads 4 being provided on its outer face with a boss 5 against which bears a clamping nut 6 engaging a threaded portion 7 of the shaft, and which may be provided with sockets 8 for the application of a spanner wrench, and if desired, with any suitable type of means for holding it firmly in position against retrograde movement and displacement. The inner face 9 of each head 4 is convexly beveled or flared outwardly from its central opening 10 through which the shaft passes, for a purpose hereinafter described.

Arranged between the disks are intermediate clamping rings or heads 11, each having a central opening 12 for the passage of the shaft, and being of less diameter than the disks 3 so as to terminate a sufficient distance inwardly from the periphery of the fiber-grasping surface to permit said surface to wear away to a considerable degree before exposing said intermediate disks or heads. The heads 4 and heads 11 are each provided with a lug, key or projection 13, entering the keyway 2 in the shaft to hold said heads from circumferential motion on the shaft, while permitting the heads to be slid longitudinally on the shaft in the operation of assembling and disassembling the parts. The said intermediate heads are tapered, the opposite faces of

each of the heads 11 being uniformly and gradually beveled from the opening 12 to comparatively thin edges at the periphery of the head, thus diminishing the thickness of the head radially at all points in an outward direction, and providing the heads 11 with convexly beveled lateral clamping faces conforming to the convexly beveled faces of the end clamping heads 4, so as to adapt the inner portions of the disks 3 to be wedged or clamped firmly in position between the respective heads, while allowing the surfaces of the projecting portions of the disks beyond the heads to come closely together. By this construction, the disks 3 are firmly and securely bound together, and a frictional engagement as well as a clamping action set up to hold them from turning on the shaft, the heads also preventing them from having relative endwise movement. In order to further increase the holding action of the intermediate heads, the opposite faces of said heads are provided with laterally-extending spurs or projections 15, which are embedded in the sides of the disks 3, and thus hold them from any possibility of shifting under working strains or pressures, about the shaft or axle 1.

It will be observed that the clamping heads 4 and 11 are of uniform size, and are made of a diameter less than that of the felt disks, but greater than one-half the diameter of the felt disks, whereby the inner portions of the felt disks are firmly clamped and held under compression, giving them a desired solidity which, in connection with the direct abutment of the disks against the shaft, provides a firm backing for the acting portion of the roll. At the same time the portions of the disks beyond the heads are compacted to a lesser degree, and accordingly are permitted to have a certain amount of lateral and radial flexibility, while such portions of the disks are also permitted to come closely together, so that their lateral faces will lie in close contact and in parallel relation, thus maintaining at all times the true circular formation of the periphery of the felt body of the roll.

In the operation of forming the roller, one of the disks or heads 4 is applied in position with its retaining nut 6, and the disks 3 and heads 11 are then alternately slipped in position upon the shaft until the body of the roller is built up, after which the other head 4 and its nut 6 are applied and the nuts firmly screwed up to clamp the assembled parts in place. When it becomes necessary to apply a new fiber-engaging surface, the worn disks in use may be removed by detaching one of the heads 4 and its securing nut, sliding the worn disks and heads 11 off the shaft, and assembling a new set of felt disks with the intermediate clamping heads, in the manner first described. A new roller may thus in effect be provided whenever occasion requires without the necessity of discarding the shaft or axle and the set of clamping heads or disks, enabling an old roller to be converted into a new one within a minimum amount of time and with a minimum cost of labor and material.

Owing to the fact that the disks 3 may be made of durable and compact felt, the period of usefulness of rollers of this character will be considerably prolonged, with less loss of time from repairs than with rollers of ordinary construction.

Having thus described the invention, what I claim as new, is:—

A roller for cotton gins comprising a shaft, end clamping heads about the shaft and having convex inner clamping faces, felt washer disks about the shaft between said clamping heads and directly backed and sustained by the shaft, intermediate clamping heads feathered to the shaft and interposed between the felt disks, said intermediate heads being gradually and uniformly tapered from their inner to their outer edges to provide convexly beveled lateral clamping faces conforming to the convex faces of the end clamping heads and extending to thin edges at their peripheries, both the end and intermediate heads being of a diameter less than the diameter of the felt disks, but of a diameter greater than one-half the diameter of said disks, substantially as and for the purpose described, means for interlocking the compressed portions of the felt disks with the lateral faces of the intermediate heads, and means for securing said end clamping heads in position to clamp said disks and intermediate clamping heads together.

In testimony whereof I affix my signature in presence of two witnesses.

SYLVANUS D. SHEPPERD.

Witnesses:
WALTER ALDERSON,
GEORGE M. BROOKS.

Copies of this patent may be obtained for five cents each, by addressing the "Commissioner of Patents, Washington, D. C."