(19) Europäisches Patentamt
European Patent Office
Office européen des brevets

(11) EP 1 052 211 B1

(12) **EUROPEAN PATENT SPECIFICATION**

(45) Date of publication and mention of the grant of the patent:
16.04.2003 Bulletin 2003/16

(51) Int Cl.[7]: **B65H 75/10**, B65H 75/18

(21) Application number: **00116709.7**

(22) Date of filing: **08.09.1997**

(54) **A core pipe for a sheet roll**

Hülsenrohr für Bandrolle

Noyau tubulaire pour rouleau de bande

(84) Designated Contracting States:
BE DE DK ES FR GB GR IE IT NL PT

(30) Priority: **20.09.1996 JP 25049296**

(43) Date of publication of application:
15.11.2000 Bulletin 2000/46

(62) Document number(s) of the earlier application(s) in accordance with Art. 76 EPC:
97115567.6 / 0 831 048

(73) Proprietor: **Kabushiki Kaisha Yuyama Seisakusho**
Toyonaka-shi, Osaka (JP)

(72) Inventors:
- **Yuyama, Shoji, K. K. Yuyama Seisakusho**
  Toyonaka-shi, Osaka (JP)
- **Nose, Hiroshi, K. K. Yuyama Seisakusho**
  Toyonaka-shi, Osaka (JP)
- **Yasunaga, Itsuo, K. K. Yuyama Seisakusho**
  Toyonaka-shi, Osaka (JP)
- **Etou, Naomichi, K. K. Yuyama Seisakusho**
  Toyonaka-shi, Osaka (JP)
- **Amano, Hirokazu, K. K. Yuyama Seisakusho**
  Toyonaka-shi, Osaka (JP)

(74) Representative: **Grünecker, Kinkeldey,**
Stockmair & Schwanhäusser Anwaltssozietät
Maximilianstrasse 58
80538 München (DE)

(56) References cited:
EP-A- 0 401 036
EP-A- 0 875 482
DE-A- 4 300 403

Note: Within nine months from the publication of the mention of the grant of the European patent, any person may give notice to the European Patent Office of opposition to the European patent granted. Notice of opposition shall be filed in a written reasoned statement. It shall not be deemed to have been filed until the opposition fee has been paid. (Art. 99(1) European Patent Convention).

EP 1 052 211 B1

Description

[0001] The present invention relates to a core pipe for a sheet roll comprising a hollow core pipe having a predetermined length for winding a sheet therearound, and magnets provided near one end of said hollow core pipe at angular intervals, determined such that the amount and diameter of the sheet roll wound therearound can be calculated by an angle sensor.

[0002] An example for such a core pipe for a sheet roll is disclosed in the European Patent Application EP 0 401 036 which shows a core pipe (spool) comprising a core shaft and a pair of flanges formed integrally with the core shaft from a synthetic resin material. Magnetized portions arranged at the outside surface of one of these flanges are used so the remaining amount of the thermal roll paper can be detected via coils which perform the task of an angle sensor.

[0003] The core pipe (spool) is supported by a pair of cylindrical fitting projections which project from a pair of support members and which are inserted into the opposite ends of an insertion hole of the spool.

[0004] Since the distance between these two cylindrical fitting projections is smaller than the outer length of the core pipe itself, a rather complex mechanism for said required sliding movement of at least one support member must be provided.

[0005] Furthermore, the exchange of the core pipe itself requires a rather complex movement since the core pipe needs to be tilted and additionally the insertion hole need to be aligned with two support members at the same time in order to insert a new core pipe.

[0006] Even more importantly, the core pipe disclosed in EP 0 401 036 A1, since it is only supported at its outer ends by the fitting projections, must bear the entire weight of the sheet roll wound about the core pipe. This is especially concerning if the sheet roll is new and of a large dimension.

[0007] Consequently, the core pipe must comprise an extremely stable center shaft so that it cannot bend during rotation when the core pipe is meant to be used for larger paper rolls as they are common, for example, in the printing industry. This, however, leads to an increased weight of the core pipe, which again increases the friction at the bearings and complicates the exchange and the transport of core pipes outside the machinery.

[0008] Accordingly, it is an objective of the present invention to improve a core pipe for a sheet roll as mentioned above in that the core pipe allows the sheets to be placed on the sheet roll, wherein the sheets are neither stretched unevenly nor distorted so that uniform quality of the sheets can be offered while at the same time the exchange of the hollow core pipe for winding a sheet thereabout can be simplified.

[0009] This objective is solved for a core pipe for a sheet roll in an inventive manner in that said hollow core pipe is rotatable together with a hollow shaft which is rotatably mounted around a fixed shaft, in that said angle sensor is provided on said fixed shaft, and in that said magnets are provided on the inner periphery of said hollow core pipe.

[0010] Since said hollow core pipe (P) is rotatable together with a hollow shaft (1c), which itself is rotatably mounted around a fixed shaft (1b), the hollow core pipe (P) is no longer subject to the entire bending moment caused by the weight of the sheet roll (R) while being rotated. Accordingly, the hollow core pipe can be manufactured of a lighter material which makes the exchange and the transport of the hollow core pipe and the sheet roll wound thereabout easier.

[0011] Furthermore, since the magnets (24) are provided in the inner periphery of said hollow core pipe, it is further possible to utilize the other end of the hollow core pipe (P), where the magnets (24) working together with the angle sensors (25) are not located, for securing the hollow core pipe (P) to the rotatable hollow shaft (1c), such guaranteeing that the sheets of paper are neither stretched nor unevenly distorted by an accidental slip of the hollow core pipe relative to the rotatable hollow shaft.

[0012] Preferably such a core pipe can be used in connection with a conventional drug packaging device which includes a sheet feed unit rotatably supporting a rolled sheet of heat-fusible packaging paper, and a sealing device 15 provided in a feed path through which the packaging sheet is unwound and fed. Upstream of the sealing device, the sheet is folded in half, drugs are supplied, and the sheet is heat-sealed in the width direction and along the edges by the sealing device to seal the drugs.

[0013] A thermal printer is usually provided upstream of the position where the sheet is folded in half for printing the packaging sheet.

[0014] Further preferred embodiments of the invention are subject to the subclaims.

[0015] Other features and objects of the present invention will become apparent from the following description made with reference to the accompanying drawings, in which:

Fig. 1 is a partial schematic view of a paper feed unit and a packaging unit of a packaging device;

Fig. 2 is a vertical sectional view of the paper feed unit with a roll of paper mounted thereon;

Fig. 3 is a schematic block diagram of a control circuit of a tension adjusting device for a packaging sheet;

Fig. 4 is a flowchart illustrating the operation of a tension adjusting device of a first embodiment;

Fig. 5 is a side view of a paper feed unit of a second embodiment as viewed in the direction of arrow V-V of Fig. 2;

Fig. 6 is a side view of the paper feed unit of the second embodiment as viewed in the direction of the arrow VI-VI of Fig. 2;

Fig. 7 is a schematic view of an angle sensor of a tension adjusting device of a second embodiment;
Figs. 8A-8D are schematic views of different type angle sensors;
Figs. 9A, 9B are views showing basic function of the tension adjusting device of the second embodiment;
Fig. 10 is a flowchart showing a special operation mode of the tension adjusting device of the second embodiment;
Fig. 11 is a flowchart showing a normal operation mode thereof;
Fig. 12 is a graph showing the relationship between the DC voltage applied and the winding length during the special mode; and
Fig. 13 illustrates how a slip detection sensor detects slipping.

[0016] The first embodiment described herein does not form part of the present invention.

[0017] Embodiments of this invention are described with reference to the drawings. Fig. 1 is a schematic diagram of a drug packaging machine showing mainly a paper feed unit and a packaging unit. The paper feed unit has a support shaft 1 on which is rotatably mounted a core pipe P on which is wound a roll R of a drug packaging paper sheet S. The sheet S is unwound from the roll R, and fed through feed rollers 2, 3 to the packaging unit.

[0018] In the packaging unit, the sheet is longitudinally folded in half by a triangular plate 4. Drugs are dropped into the space defined in the folded sheet. The sheet is then heat-sealed widthwise and along both side edges at predetermined intervals by heating rollers 6 with perforators. While the packaging unit includes numerous other parts, only essential parts are shown for simplicity.

[0019] Fig. 2 is a partial vertical section of the paper feed unit in which the roll paper R and the core pipe P are set. As shown, the support shaft 1 comprises a center shaft 1a having one end thereof fixed to a support plate 11 by a nut, an outer shaft 1b integrally mounted around the center shaft 1a, and a hollow shaft 1c rotatably mounted on the outer shaft 1b through bearings 12 provided near both ends of the outer shaft 1b.

[0020] The center shaft 1a has a shaft head 13 at one end. The outer shaft 1b has a flange 14 at the same one end. The hollow shaft 1c has a flange 15 at the other end. The core pipe P and the roll paper R, mounted on the hollow shaft 1c, are rotatable relative to the support shaft 1. A plurality of magnets 16 are provided on the inner peripheral surface of the flange 15 at suitable intervals. Ferromagnetic (iron) members 17 are provided along the circumference of an end face of the core pipe P. The magnets 16 attract the ferromagnetic member 17 to detachably mount the core pipe P and the roll paper R on the hollow shaft 1c.

[0021] Packaging sheet S unwound from the roll paper R is suitably tensioned by a motor brake 20 engaging the hollow shaft 1c. The motor brake 20, mounted on the support plate 11, is connected to a gear unit 21 through a transmission belt, not shown. The gear unit 21 has an output shaft on which is mounted a pinion 22 in mesh with a large gear 23 provided on the outer peripheral surface of the flange 15. Thus, by activating the motor brake 20, braking force is applied to the hollow shaft 1c.

[0022] The motor brake 20 is a small AC motor powered by a DC voltage. As will be described below, braking force is variable in four stages according to the tension in the packaging sheet S being unwound by changing the DC voltage applied in four stages.

[0023] Magnets 24, Hall element sensors 25, a proximity switch 26 and projections 27 are described in the second embodiment.

[0024] Fig. 3 schematically shows a brake circuit for controlling various parts of the device for feeding packaging sheet from the paper feed unit and packaging drugs. Its control unit 30 receives signals from an end sensor 31, those from a rotary encoder 32 provided near the feed rollers 3, and those from a revolving speed counter 33 mounted on the output shaft of a motor 6a coupled to the shaft of one of the heating rollers 6, and produces, based on one of the above signals, outputs for activating the motor brake 20 or the motor 6a. Numeral 34 indicates an input unit for inputting external data.

[0025] Drugs are packaged while adjusting the tension in the packaging sheet with the sheet tension adjusting device of the first embodiment.

[0026] In the first embodiment, the maximum diameter d_{max} and the minimum diameter do of the roll paper R to be set in the paper feed unit are known beforehand. Braking force produced by the motor brake 20 is varied in four stages according to the signal from the rotary encoder 32 to apply suitable tension to the sheet by adjusting the braking force according to the changing diameter of the paper roll R.

[0027] The roll paper R shown has a maximum diameter d_{max}= 160 mm, minimum diameter do ≒ 64 mm, and sheet thickness γ = 30 μm. In this case, braking force produced by the motor brake is varied every time the diameter of the paper roll R decreases (160 - 64)/4 = 24 mm.

[0028] The length of the sheet forming a roll R of a given diameter is given by the following formula:

$$L = [(d_0+2\times\gamma) + (d_0+2\times2\gamma) +\cdots+ (d_0+2\times(n-1)\gamma + (d_0+2\times n\gamma)]\pi$$

$$= [nd_0 + 2(1+2+...+n-1+n)\ \gamma]\pi$$

$$= [nd_0 + 2 \times \frac{n(n+1)}{2}\ \gamma]\pi$$

$$= [d_0 + (n+1)\gamma]\, n\pi \quad (1)$$

(wherein n is the number of turns)

[0029] The diameter of the roll R is given as follows:

$$d_{max} = do + 2 \times n\gamma \quad (2)$$

[0030] From Formula (1), the length L_{max} of the sheet forming the roll R when the roll diameter is maximum is:

$$L_{max} = [64 \times n + n(n+1) \times 30n \times 10^{-3}]\, \pi$$

From Formula (2),

$$d_{max} = 64 + 2 \times 30n \times 10^{-3} = 160$$

(mm)

Thus,

$$n = 96/6 \times 10^{-2} = 1600$$

Hence,

$$L_{max} = (64+1601 \times 30 \times 10^{-3}) \times 1600\pi$$

$$= 562{,}688 \text{ (m)}$$

[0031] Now, let the diameter range of the roll paper divide into four stages N = 1 (largest), 2 (second largest), 3 (third largest) and 4 (smallest). The maximum sheet length of the roll in each stage is given by the following formulas:

where N = 1, L_{max} = 562,688 (m), (n = 1600, d_{max} = 160)
where N = 2, L_{max} = 376,800 (m), (n = 1200, d_{max} = 136)
where N = 3, L_{max} = 221,056 (m), (n = 800, d_{max} = 112)
where N = 4, L_{max} = 95,456 (m), (n = 400, d_{max} = 88)

[0032] The control unit 30 receives the signal from the rotary encoder 32 to measure the length of packaging sheet S to the feed rollers 3 and determines in which one of the stages 1-4 the diameter of the roll R is. Then, the control unit determines the DC voltage to be applied to the motor brake 20 so that an equal tension is applied to the sheet for all the stages 1-4. For example, the DC voltage is determined as follows:

where N = 1, V = 25V
where N = 2, V = 16V
where N = 3, V = 12V
where N = 4, V = 8V

[0033] Referring now to the flowchart of Fig. 4, this method is described more specifically.

[0034] First, as shown in Fig. 1, the packaging sheet S is slightly unwound from the paper roll R to a point at least downstream of the heating rolls 6 and sandwiched between the heating rolls 6 so that the sheet can be heat-sealed by the heating rolls 6.

[0035] In this state, the control unit is started. In Step S1, data on dimensions of the paper roll R is entered through the input unit 34. Such data, that is, data on the completely wound paper roll R may be stored in the input unit 34 beforehand and fed to the control unit when a signal on an end product is entered. Otherwise, necessary data may be entered through a keyboard every time such data are needed. The latter method is advantageous when a half-used paper roll R is reset. When these data are entered, the control unit 30 begins to control the computation and feed the packaging sheet S. In Step S2, a maximum DC voltage is applied to feed the packaging sheet S with its tension kept at the maximum.

[0036] In Step S3, a signal on the sheet length data is read. In this embodiment, this signal is the signal from the rotary encoder 32 and is inputted for every processing cycle in each of the steps described below.

[0037] In Step S4, based on the input signal, the control unit calculates the number by which the turns of the paper roll has decreased from the maximum diameter until the above signal is inputted, and based on this number, calculates the remaining sheet length of the paper roll and its diameter at this moment, using the formulas (1) and (2). In Step S5, based on the thus calculated remaining sheet length of the paper roll, the tension level is determined.

[0038] That is, in Step S5, the control unit 30 determines, based on the remaining sheet length of the roll, in which one of the stages 1-4 the diameter of the paper roll R is. If the diameter of the roll is in stage N = 1, a predetermined DC voltage for tensioning the sheet S to the maximum level is applied to the motor brake 20 in Step S6.

[0039] If N # 1, the control unit determines if N = 2 in Step S7.

[0040] If N = 2, a DC voltage of 16 V is applied to the motor brake 20 in Step S8. If $N \neq 2$, the control unit determines if N = 3 in Step S9. If it is, a DC voltage 12 V is applied in Step S10. If not, the control unit determines if N = 4 in Step S11. If it is, a DC voltage 8 V is applied in Step S12.

[0041] The above operation is carried out for every cycle in the processing loop. If $N \neq 4$ in Step S11, which means that the packaging sheet S has been unwound completely, the control unit stops the feed of sheet S after confirming the signal from the end sensor 31 in

Step 13. This completes the entire control.

[0042] In this embodiment, the signal from the rotary encoder 32 is used to measure the sheet length and control the motor brake 20 based on the sheet length. But instead, the sheet length may be measured by use of signal from a sensor provided on the support shaft 1 of the paper feed unit for detecting the rotary angle of the paper roll R. This sensor is used in the second embodiment.

[0043] In the first embodiment, it is assumed that the sheet has a thickness of 30 μm. But actually, while the sheet is being fed, it is stretched due to the tension applied to the sheet. Thus, the sheet thickness is usually smaller while being fed than while in a stationary state. Thus, the sheet thickness while the sheet is being fed should be determined by reducing the sheet thickness in a stationary state by a certain rate which is estimated based on average elongation of the sheet while being fed.

[0044] Fig. 5 and the subsequent figures show the second embodiment, which is of basically the same construction as the first embodiment but includes additional elements so that the sheet tension can be controlled with higher accuracy.

[0045] The paper feed unit and the packaging unit of this embodiment are those shown in Figs. 1-3. This embodiment differs from the first embodiment in that, as shown in Fig. 3, the control unit 30 receives the signals from a rotary angle sensor assembly comprising four magnets 24 on the core pipe P and four Hall element sensors 25, and a sheet displacement sensor comprising a proximity switch 26 and projections 27 (see Figs. 2 and 5).

[0046] Specifically, the control unit accurately calculates the length of the sheet S unwound from the paper roll R based on the sheet length sensor signal of the first embodiment and the signal from the rotation angle sensor, and adjusts the braking force corresponding to the variation in diameter of the roll R to adjust the tension applied to the sheet.

[0047] As shown in Fig. 7, the four magnets 24 of the second embodiment are provided on the inner peripheral surface of the core pipe P at angular intervals of 67.5 ° around the axis of the pipe P, while the four Hall element sensors 25 are provided at one end of the support shaft 1 at equal angular intervals of 90 ° around the axis of the pipe P.

[0048] The numbers and positions of magnets 24 and sensors 25 are however not limited to those shown in Fig. 7. Fig. 8 shows some variations of their numbers and arrangement. In any variation, the Hall element sensor or sensors 25 produces a pulse signal every time the core pipe P rotates 22.5°.

[0049] Whilst not part of the invention it is possible, instead of the combination of magnets 24 and Hall elements 25, to use photosensors to detect the rotation of the core pipe P. Such photosensors comprise light emitting diodes and light interceptors and are fixed to one end of the support shaft 1 (outer shaft 1b) as with the Hall elements 25.

[0050] More particularly, such photosensors are mounted on an extension or mounting seats provided on the flange end of the outer shaft 1b, while projections are provided on the core pipe P at angular intervals of 22.5° so as to pass between the light emitting diodes and the light interceptors of the photosensors. The numbers of the photosensors and the projections are the same as the Hall element sensors 25 and the magnets 24.

[0051] Fig. 6 is a side view as viewed in the direction of arrow VI-VI of Fig. 2, and mainly shows the position of the displacement detection sensor for the packaging sheet. In this example, a single proximity switch 26 is provided on the support plate 11. Sixteen projections 27 are provided on the flange 15 of the rotatable hollow shaft 1c of the support shaft 1.

[0052] If there is a difference in pitch between the rotation angle sensor signal detected by the Hall element sensors 25 and the signal detected by the displacement detection sensor, the control unit determines that there is a displacement.

[0053] Now the operation of the second embodiment is described. As shown in Figs. 9A, 9B, this operation basically comprises determining the length of sheet forming the paper roll based on the total length 1 of the unwound sheet calculated from the sheet length signal produced by the rotary encoder 32, and the angle θ calculated from the pulse signal from the Hall element sensors 25 as the angle sensors.

[0054] In Figs. 9A, 9B, for convenience of the description of operation, the number and arrangement of magnets 24 and Hall element sensors 25 are different from those of Fig. 7 and 8. But its basic operation is the same in that one pulse signal is produced for every 22.5 ° rotation.

[0055] As shown Fig. 9A, when the radius of the paper roll is large, the angle sensor produces fewer pulses while the packaging sheet is unwound by the length 1. As the paper roll radius decreases as shown in Fig. 9B, the number of pulses increases. If the pulse numbers when the paper roll radius is at its maximum and minimum is 3 and 10, respectively, the range of pulse numbers from 3-10 are divided into four stages so as to apply D/C currents that can apply suitable tension corresponding to the respective stages to the motor brake 20 to adjust the braking force.

[0056] There is the following relationship between the above tension level N = 1-4 and the pulse number. Provide the maximum and minimum diameters of the paper roll R are 160 mm and 64 mm, respectively, the length of the sheet unwound from the roll when the roll diameter is maximum will be π× 160 mm. Since the angle sensor 25 produces one pulse signal for every 22.5° rotation (16 pulses for every full turn), the sheet is unwound by π× 160/16 = 314 m/m. For the unwound length of 3140 m/m, the pulse number will be 10.

[0057] When the roll diameter is minimum, there is the following relation between the length of sheet unwound and the pulse number. That is, since $\pi \times 64/16 = 129.5$ m/m, for the unwound length of 3140 m/m, the pulse number will be $3140/1295 \times 10 = 24.2$.

[0058] The pulse number and the DC voltage for every tension level N are determined as follows:

Tension Level N	Pulse Number	DC Voltage
N = 1	10-13	25V
N = 2	14-17	16V
N = 3	18-21	12V
N = 4	22-24.2	8V

[0059] In the above description, the tension level N is adjusted according to the pulse number for a given unwound length of sheet. But the tension level may be determined based on the unwound length of sheet when a predetermined number of pulses have been produced. More detailed description of this method follows:

[0060] Figs. 10 and 11 are flowcharts showing the operation of the tension adjusting device. Specifically, Fig. 10 is a flowchart of a special mode to be carried out before the normal mode of the tension adjusting device. Fig. 11 is a flowchart of the normal mode.

[0061] In the special mode shown in Fig. 10, the control unit checks various conditions for the normal packaging operations in the packaging unit so that the normal mode can be carried out smoothly. Before the normal packaging operation, packaging sheet has to be correctly set in the packaging unit. The packaging sheet is usually set manually by inching. The control mode always passes this special mode.

[0062] In Step S0, the control unit determines if the current mode is the special mode. The special mode starts if any one of the following conditions is met: i.e. the actuation of the end sensor or joint seal, and the detection of inching mode or reverse rotation of the winding length sensor. The joint seal is activated while one paper roll has run out and a new roll is being set and spliced to the preceding sheet.

[0063] The inching mode starts by switching on the control unit before the start of all of the operations, and the packaging sheet is manually set in the above-described manner.

[0064] The special mode is necessary because a new, complete paper roll is not always set but there is the possibility that a used roll paper having e.g. half the diameter of a new roll may be set. If the roll set has only half the diameter of a new paper roll, the tension is initially adjusted to an intermediate level smaller than the tension corresponding to the diameter of the new roll.

[0065] If the current mode is judged to be the special mode in Step S0, the tension is set at the maximum level in Step SS1, and various sensors (reference sensor, rotation number counter, winding length sensor, core pipe slip sensor) are activated (Step SS2). In this state, the packaging sheet is fed little by little by manual inching, and the signals from the sheet length sensor or rotary encoder 32, and the angle sensors or Hall element sensors 25.

[0066] In Step SS5, the control unit calculates the sheet length of the paper roll based on these signals using the above-described formulas to determine whether the roll has the maximum diameter or not, e.g. half the maximum diameter. If this calculation is not possible (NO), Step SS3 is carried out again. If possible, the control unit determines in Step SS7 if the conditions for reentering the special mode are all removed. If they are, the tension is adjusted to a suitable level in Step SS8. Steps SS9 and SS10 are steps for detecting slipping of the core pipe, which will be described later.

[0067] During tension adjustment in Step SS8, a DC voltage corresponding to maximum tension is set at 25 V if the paper roll has a maximum diameter (new) and at about 20 V if the paper roll diameter is about half the maximum diameter to prevent any abrupt change in tension.

[0068] When the tension has been adjusted to a suitable level, the program returns to Step S0 to determine whether or not to carry out the special mode operation again. This time, the program proceeds to the normal mode [A].

[0069] In the normal mode shown in Fig. 11, an inching mode switch is manually changed over, and then in Step S1, the previously set data is read out, and the various sensors are kept turned on (S2). By this time, the normal operation of the'packaging unit has started. At the start of the normal operation, the tension is controlled to the DC current value suitably set in the special mode.

[0070] Then in Steps S3, S4 and S5, the sheet length signal and angle sensor signal are inputted in the same manner as in the special mode to calculate the sheet length of the roll. This calculation is carried out substantially in the above-described manner. If, as a result of calculation, the roll R turns out to be an unused, full-volume roll, the DC voltage is set at 25 V, 16 V, 12 V or 8V in Step S7, S9, S11 or S13 according to the judgment in Steps S6, S8, S10 and S12, in the same way as in the first embodiment. Fig. 12 shows the relationship between the above-described winding length and the DC voltage control.

[0071] After the tension control has been carried out via any of the abovementioned routes, the control unit determines if the core pipe is slipping in Step S14 based on the signal from the proximity switch 26. As shown in Fig. 6, the switch 26 is provided opposite to the 16 ferromagnetic projections, and produces a pulse signal every time the core pipe rotates 22.5° in exactly the same manner as the Hall element angle sensors 25.

[0072] In the embodiments, the angle sensors 25 and 26 are different types, but they may be of the same type. The time chart of Fig. 13 shows the relationship between

the pulse signals produced by the angle sensors and the rotation angle. As shown, the pulse signals by the slip detection sensor can be obtained synchronously with the pulse signals by the winding length detecting sensor unless the winding condition changes with tension.

[0073] But if the rotation resistance of the motor brake 20 produced by each of the above-described DC voltages is inappropriate, for example, if the tension is too large at the tension level N = 2, the paper roll R will rotate strongly together with the core pipe P. This may cause a shift in the position where the ferromatnetic members 17 are attracted to the magnets 16. If this happens, although the Hall element sensors 25 keep producing pulse signals at regular angular intervals of 22.5°, the proximity switch 26 may produce two pulse signals simultaneously and fails to produce a signal when the core pipe rotates another 22.5°.

[0074] Fig. 13 shows how pulse signals change when such a position shift occurs. As shown, the slip detection sensor fails to produce pulse signals at positions C and D after the core pipe has made a complete turn. Instead, pulse signals are produced between D and A with some displacement.

[0075] In such a case, the control unit can determine that the slip detection sensor has failed to produce a pulse signal at position C by referring to the signal from the winding length detection sensor. If, for example, the DC current of 16 V is too high at the level N = 2, so that the tension is too high, the voltage may be reduced to 14 V to adjust the tension to a suitable level. With this voltage adjustment, a pulse signal can be produced at any desired position after position D.

[0076] After adjusting any position shift of the core pipe P due to sheet tension variation, the control unit checks in Step S16 if paper is still wound on the pipe P based the signal from the end sensor 31. If the sensor 31 has not yet detected the terminal end of the paper, the Step S3 operation is carried out, that is, the sheet tension is controlled according to the winding length of the paper roll by repeating the above calculations.

[0077] The tension control mode ends when the end sensor 31 detects the terminal end of the packaging sheet S. If it is necessary or desired to continue packaging thereafter, the program returns to the special mode to replace the roll R with a new one and connect the sheet ends.

[0078] Steps SS9 and SS10 are shown by chain lines in the flow chart for the special mode, which means that these steps are not essential. If provided, though, their functions are the same as Steps S14, S15 in the slip detection operation in the normal mode.

[0079] The above description has been made on the assumption that the paper roll R is a full-volume roll. If a roll about half the maximum diameter is set in the paper feed unit, after the tension has been adjusted in the special mode to a level slightly larger than the tension during the normal mode when the full-volume roll is unwound to about half the maximum diameter, the normal mode is started. It is thus possible to smoothly start the normal mode without the possibility of an abrupt rise in tension.

[0080] As described above, according to the present inventions, the paper roll diameter corresponding to the current winding length of the roll is calculated based on data on the sheet feed length measured by the single sheet length sensor and data on the full winding length of the roll to adjust the sheet tension to an optimum level by controlling the braking force in a stepwise manner based on the paper roll diameter measured. Thus, it is possible to adjust the sheet tension to an optimum level by selecting the braking force in a stepwise manner corresponding to the roll diameter corresponding to the gradually decreasing winding length of the roll, unless the winding length of the roll begins to increase. It is thus possible to smoothly adjust the sheet tension without the possibility of abrupt tension fluctuations due to sudden fluctuations in braking force when the roll diameter changes slightly.

[0081] According to another aspect of the present invention, the current winding length of the roll is determined based on the change in the signal from one of the sheet length sensor and the angle sensor relative to the signal from the other sensor, and the sheet tension is adjusted by selecting a braking force corresponding to the diameter corresponding to the current winding length. In this arrangement, even if data on the full winding length is not known, it is possible to adjust the sheet tension by selecting a braking force corresponding to the roll diameter corresponding to the current winding length determined based on the measurement data. Thus, it is possible to smoothly adjust the sheet tension without the possibility of abrupt change in tension, in the same manner as in the first invention.

Claims

1. A core pipe for a sheet roll (R) comprising a hollow core pipe (P) having a predetermined length for winding a sheet (S) therearound, and magnets (24) provided near one end of said hollow core pipe (P) at angular intervals, determined such that the remaining sheet length and the diameter of the sheet roll (R) wound therearound can be calculated by an angle sensor (25), in conjunction with a sheet feed length sensor
   characterized in that said hollow core pipe (P) is rotatable together with a hollow shaft (1c) which is rotatably mounted around a fixed shaft (1b),
   in that said angle sensor (25) is provided on said fixed shaft (1 b), and **in that** said magnets (24) are provided on the inner periphery of said hollow core pipe (P).

2. A core pipe for a sheet roll according to claim 1,

characterized in that said hollow shaft (1c) is insertable through said hollow core pipe (P).

3. A core pipe for a sheet roll according to claim 1 or 2, **characterized in that** means for allowing said hollow core pipe (P) to rotate together with said hollow shaft (1c) comprise magnetizable members (17) provided on an end face of said hollow core pipe (P), and magnets (16) provided on said hollow shaft (1c).

Patentansprüche

1. Kemrohr für eine Bahnrolle (R) mit einem hohlen Kemrohr (P), das eine vorbestimmte Länge zum darauf Aulwickeln einer Bahn (S) hat, und Magnete (24), vorgesehen nahe eines Endes des hohlen Kemrohres (P) in Umfangsabständen, derart bestimmt, dass die verbleibende Bahnlänge und der Durchmesser der darauf aufgewickelten Bahnrolle (R) durch einen Winkelsensor (25) in Verbindung mit einem Bahnführungslängensensor berechnet werden kann, **dadurch gekennzeichnet, dass** das hohle Kemrohr (P) zusammen mit einer Hohlwelle (1c), die drehbar um eine feststehende Welle (1b) montiert ist, drehbar ist, dass der Winkelsensor (25) auf der feststehenden Welle (1b) vorgesehen ist, und dadurch dass die Magnete (24) auf dem Innenumfang des hohle Kemrohres (P) vorgesehen sind.

2. Kemrohr für eine Bahnrolle (R) nach Anspruch 1, **dadurch gekennzeichnet, dass** die Hohlwelle (1c) durch das hohle Kemrohr (P) einsetzbar ist.

3. Kemrohr für eine Bahnrolle (R) nach Anspruch 1 oder 2, **dadurch gekennzeichnet, dass** mittel, um dem hohlen Kemrohr (P) zu gestatten, sich zusammen mit der Hohlwelle (1c) zu drehen, magnetisierbare Teile (17) sind, vorgesehen an einer Endfläche des hohlen Kemrohres (P), und Magnete (16), vorgesehen an der Hohlwelle (1c).

Revendications

1. Tube central pour un rouleau de feuille (R) comprenant un tube central creux (P) ayant une longueur prédéterminée permettant d'enrouler une feuille (S) autour, et des aimants (24) disposés à intervalles angulaires près d'une extrémité dudit tube central creux (P), de telle façon que la longueur de feuille restante et le diamètre du rouleau de feuille (R) enroulé autour puissent être calculés par un détecteur d'angle (25), en conjonction avec un détecteur de longueur de feuille, **caractérisé en ce que** ledit tube central creux (P) effectue une rotation avec un mandrin creux (1c) monté de manière rotative autour d'un mandrin fixe (1b), **en ce que** ledit détecteur d'angle (25) est disposé sur ledit mandrin fixe (1b), et **en ce que** lesdits aimants (24) sont disposés sur la périphérie interne dudit tube central creux (P).

2. Tube central pour rouleau de feuille selon la revendication 1, **caractérisé en ce que** ledit mandrin creux (1c) peut être inséré dans ledit tube central creux (P).

3. Tube central pour rouleau de feuille selon la revendication 1 ou 2, **caractérisé en ce que** les moyens permettant audit tube central creux (P) d'effectuer une rotation avec ledit mandrin creux (1c) comprennent des éléments magnétisables (17) disposées sur une extrémité du tube central creux (P), et des aimants (16) disposés sur ledit mandrin creux (1c).

FIG. 1

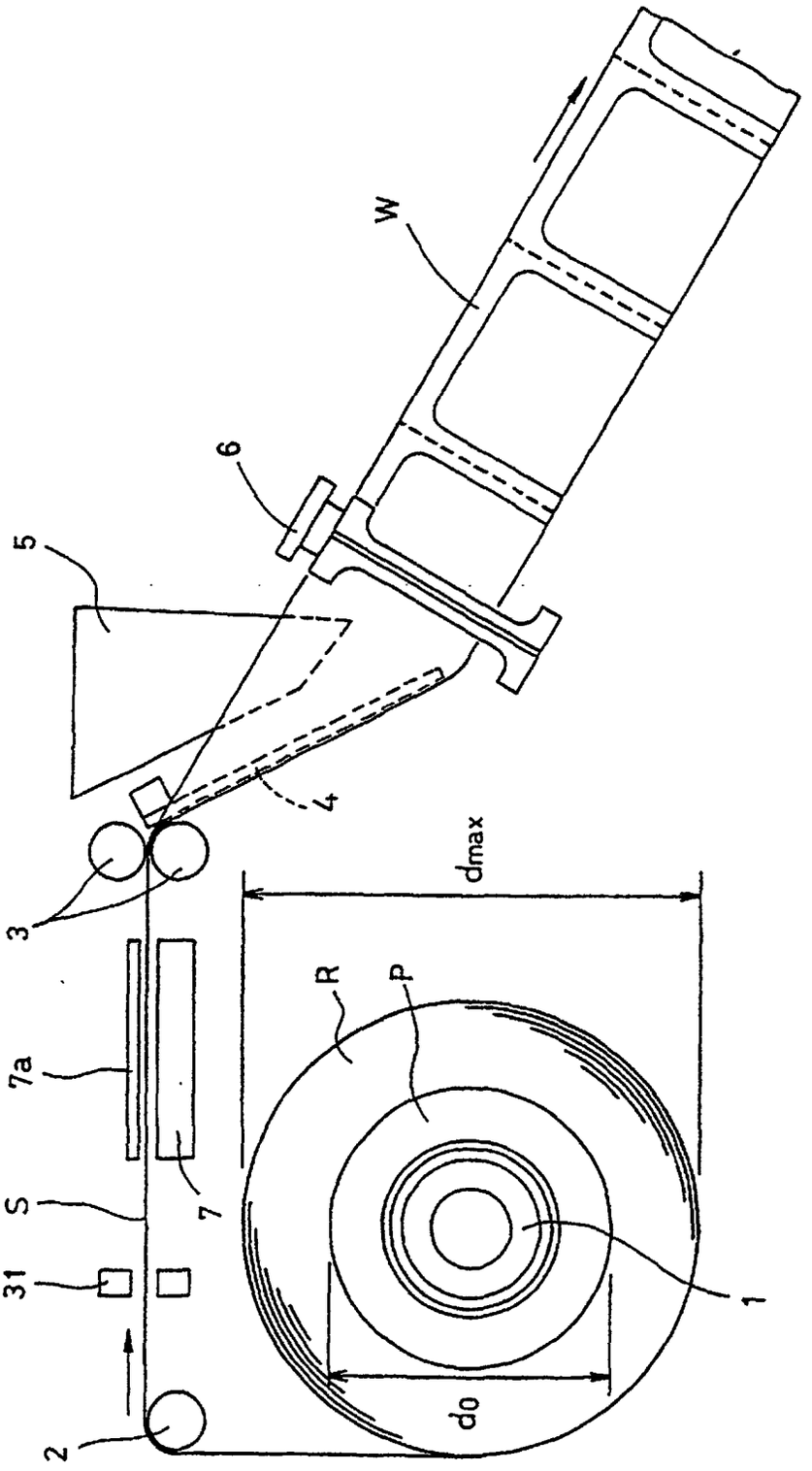

FIG. 2

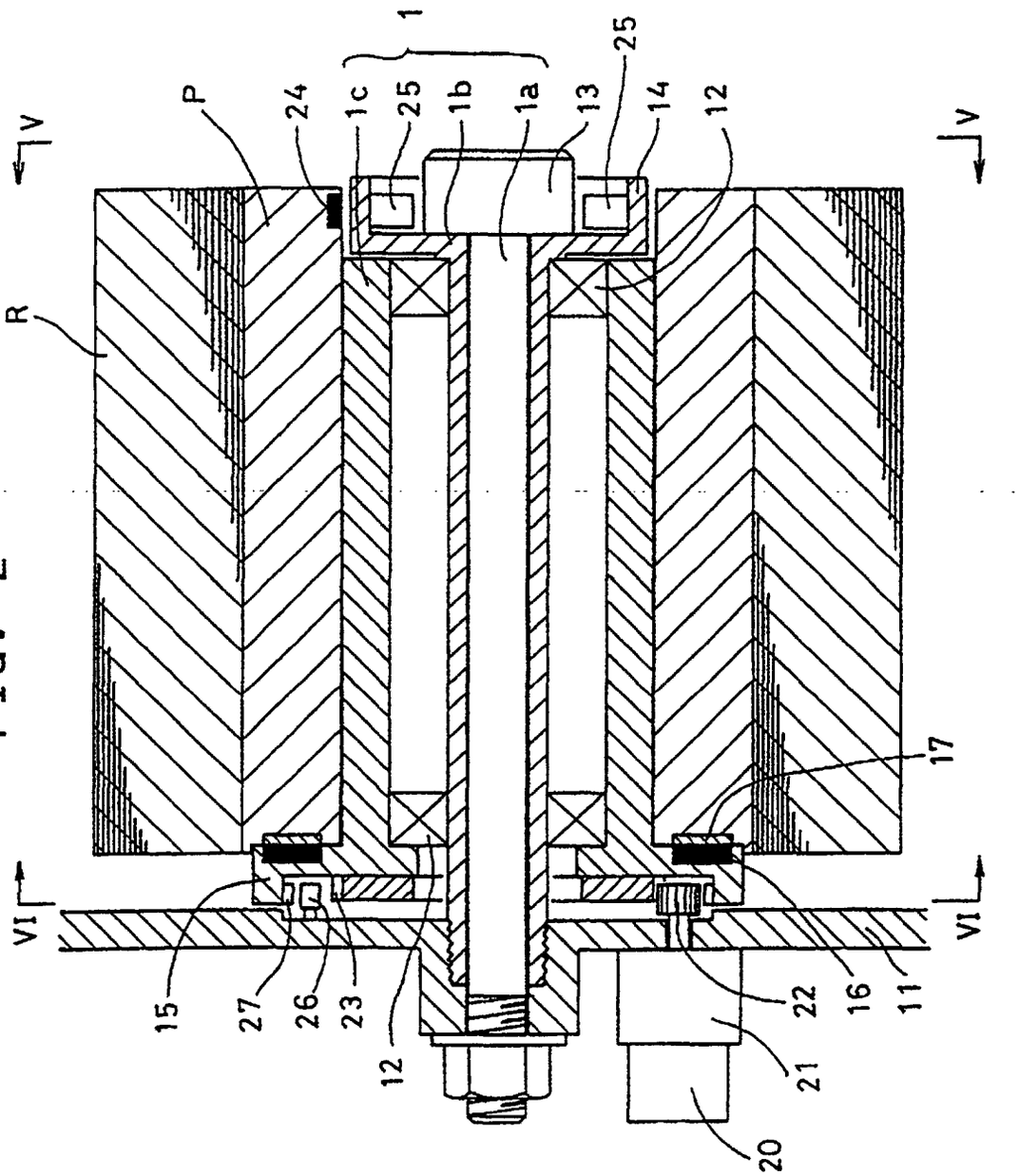

FIG. 3

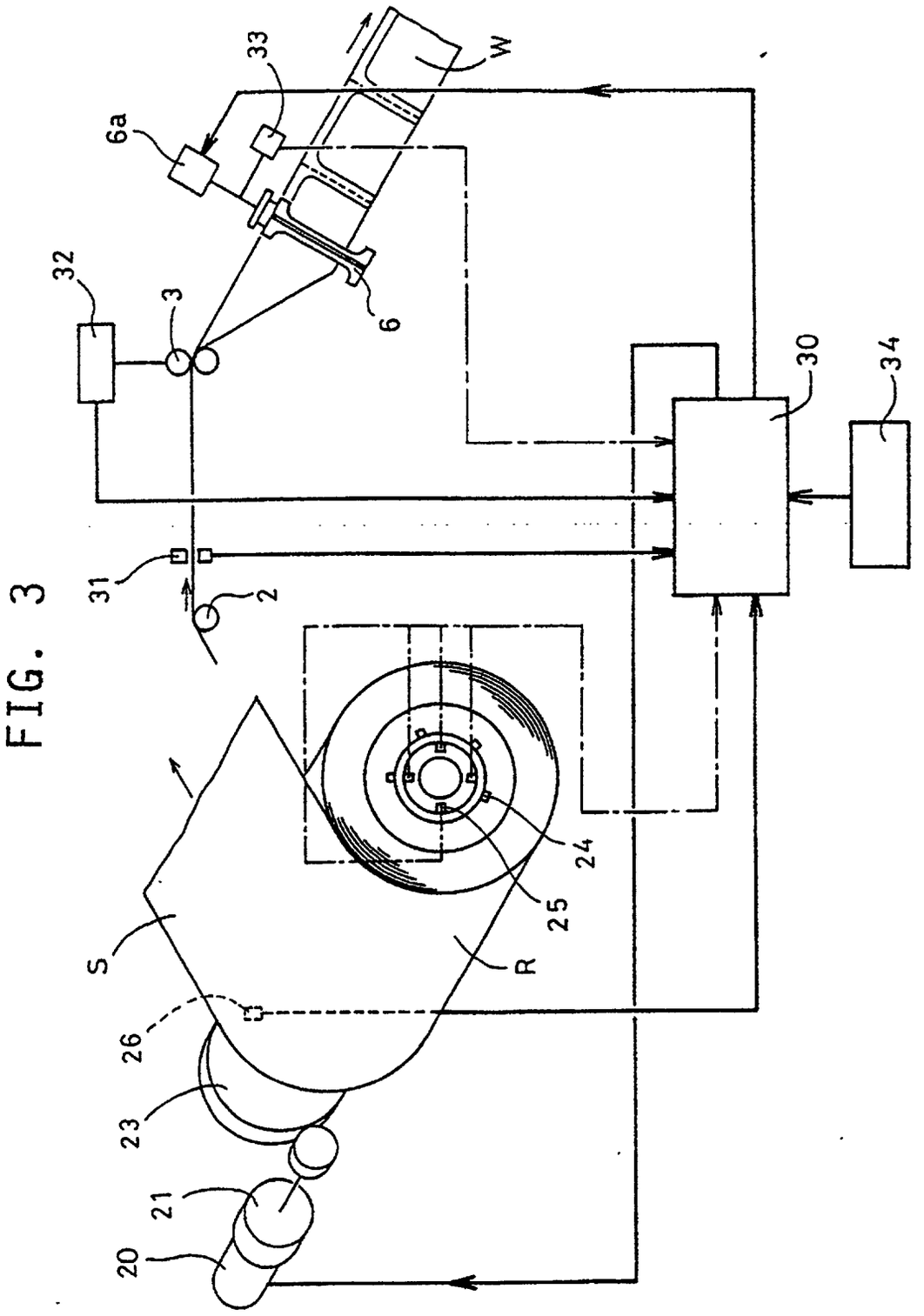

FIG. 4

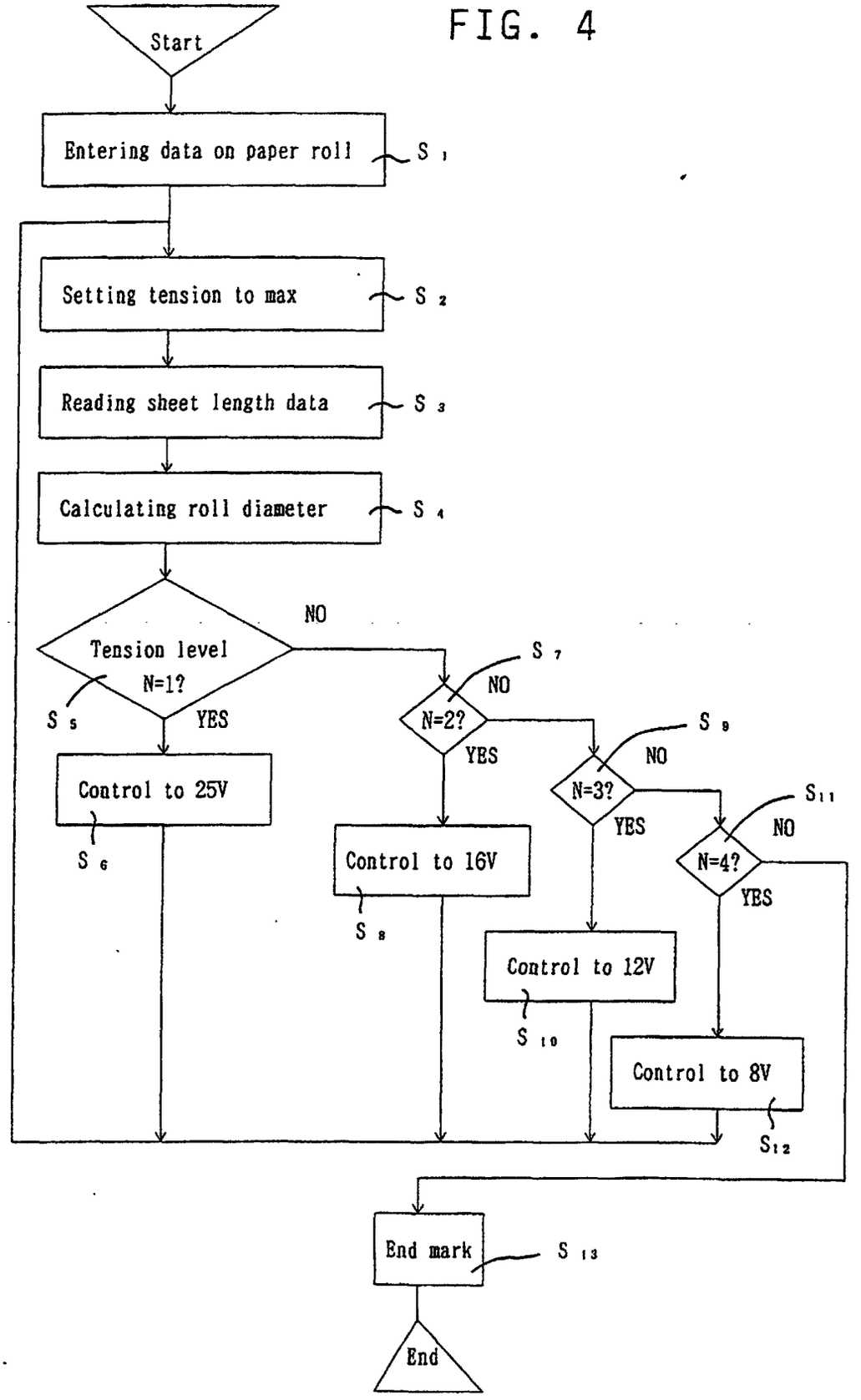
Start
Entering data on paper roll
S 1
Setting tension to max
S 2
Reading sheet length data
S 3
Calculating roll diameter
S 4
Tension level N=1?
S 5
NO
YES
Control to 25V
S 6
N=2?
S 7
NO
YES
Control to 16V
S 8
N=3?
S 9
NO
YES
Control to 12V
S 10
N=4?
S 11
NO
YES
Control to 8V
S 12
End mark
S 13
End

FIG. 5

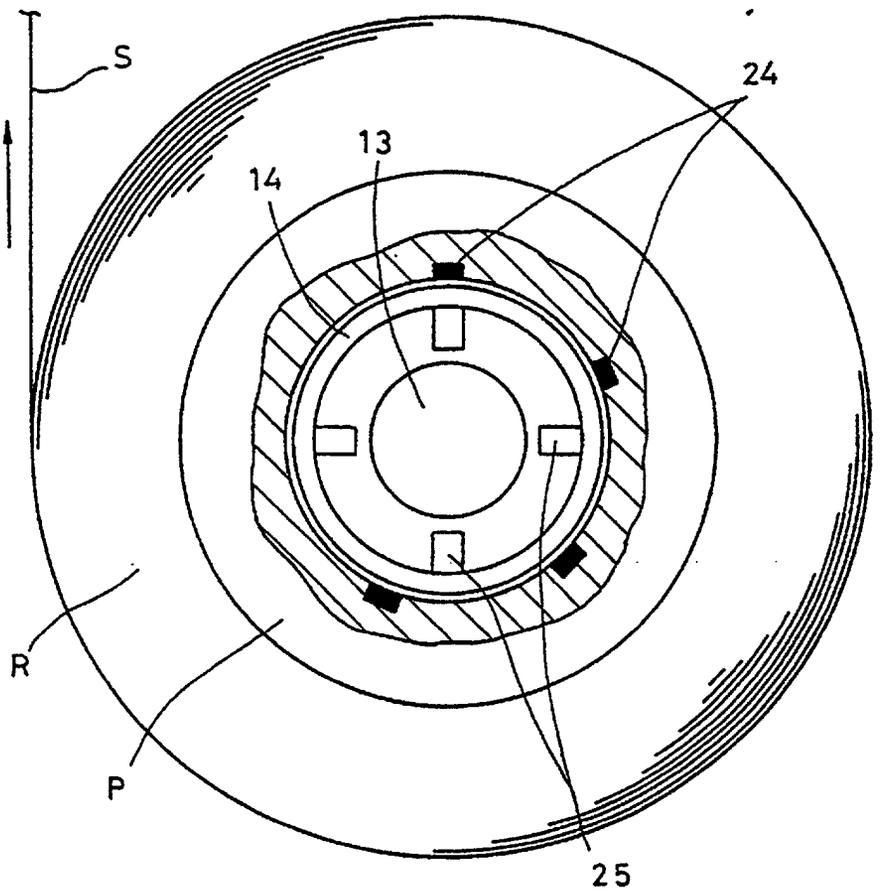

FIG. 6

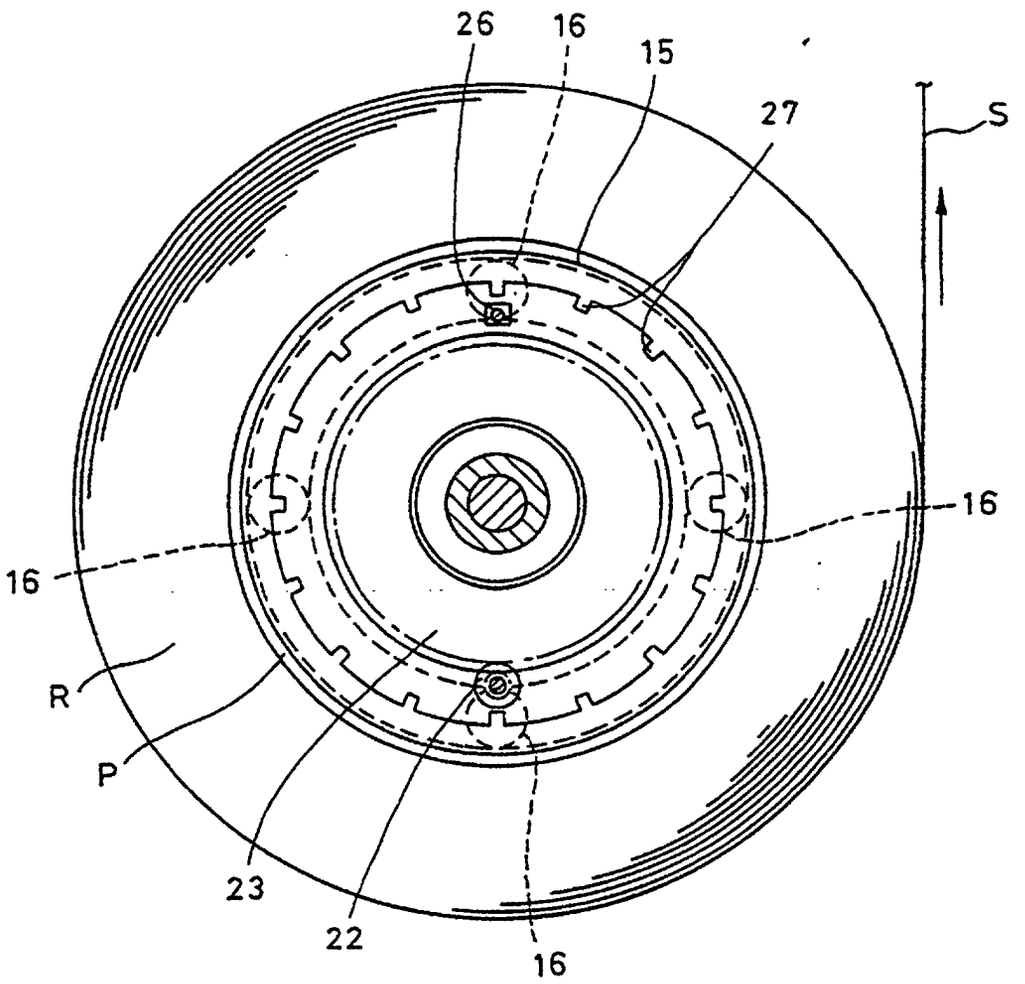

FIG. 7

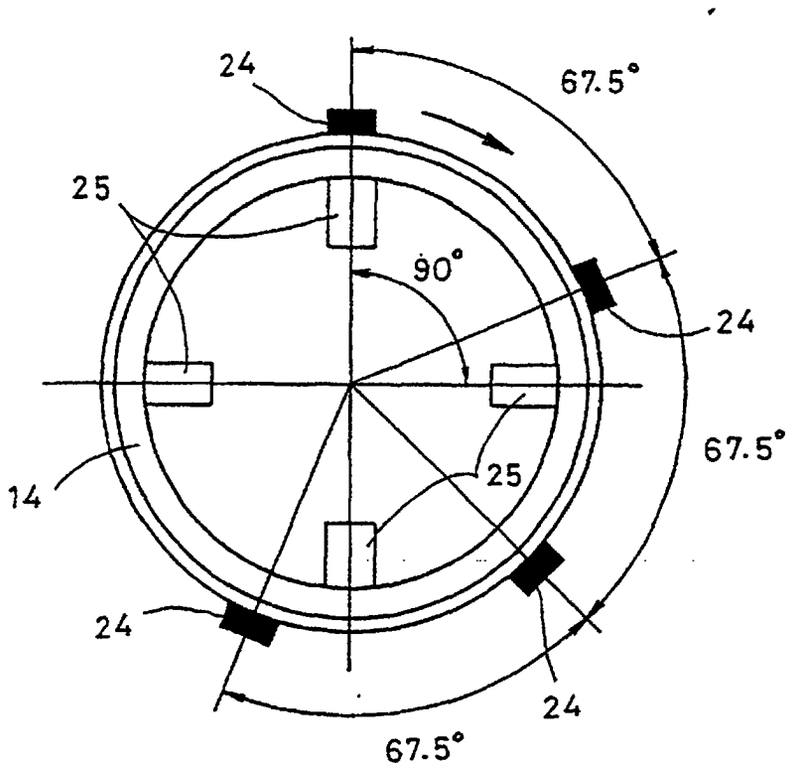

FIG. 8A

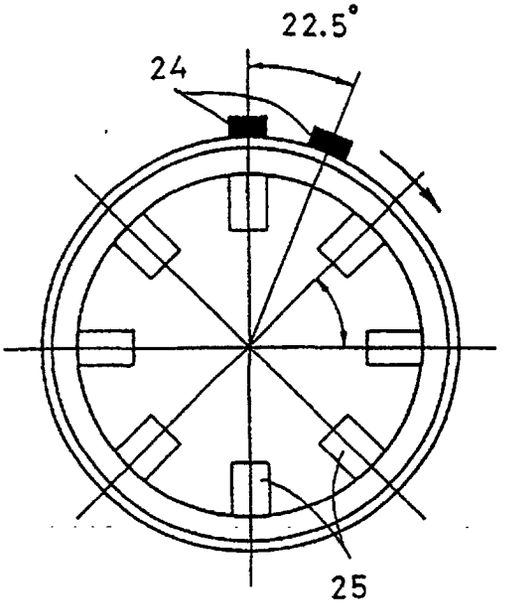

FIG. 8B

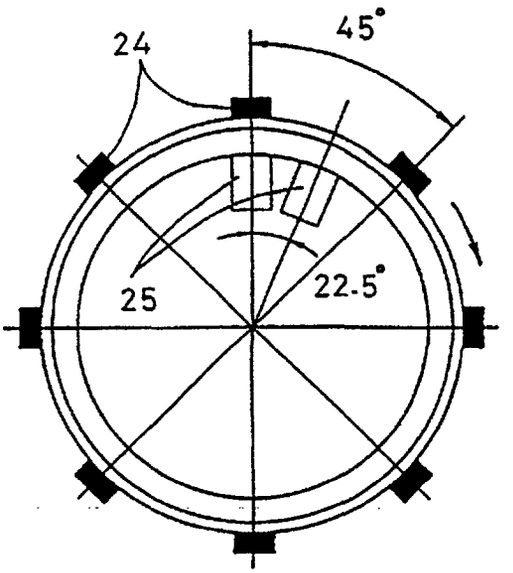

FIG. 8C

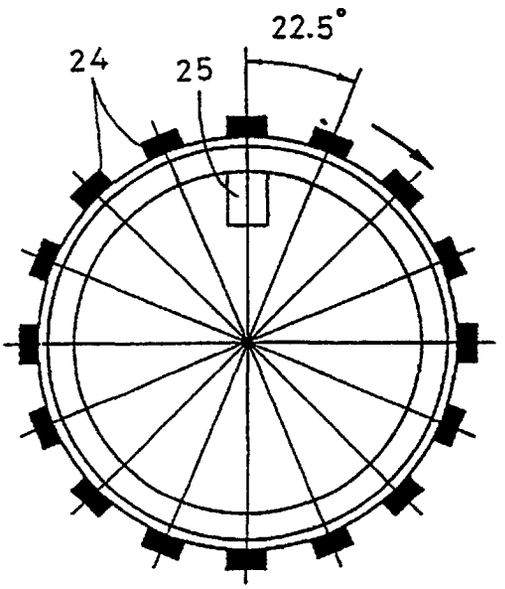

FIG. 8D

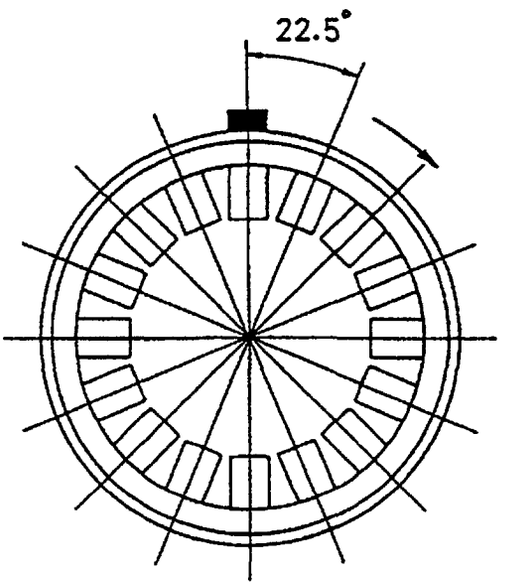

FIG. 9A

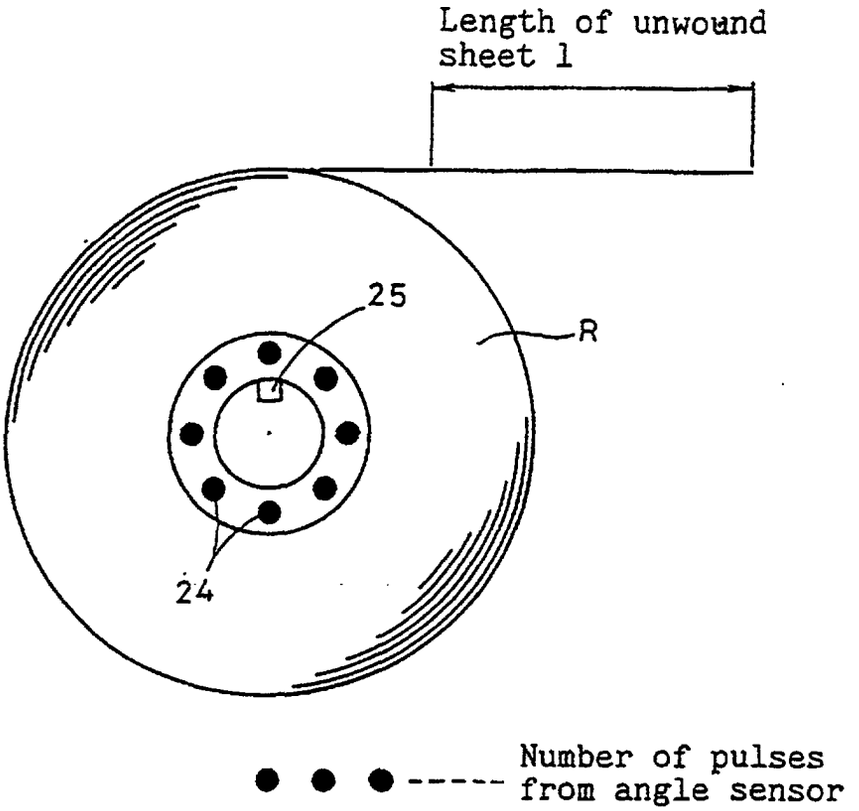
Length of unwound sheet l
25
R
24
Number of pulses from angle sensor

FIG. 9B

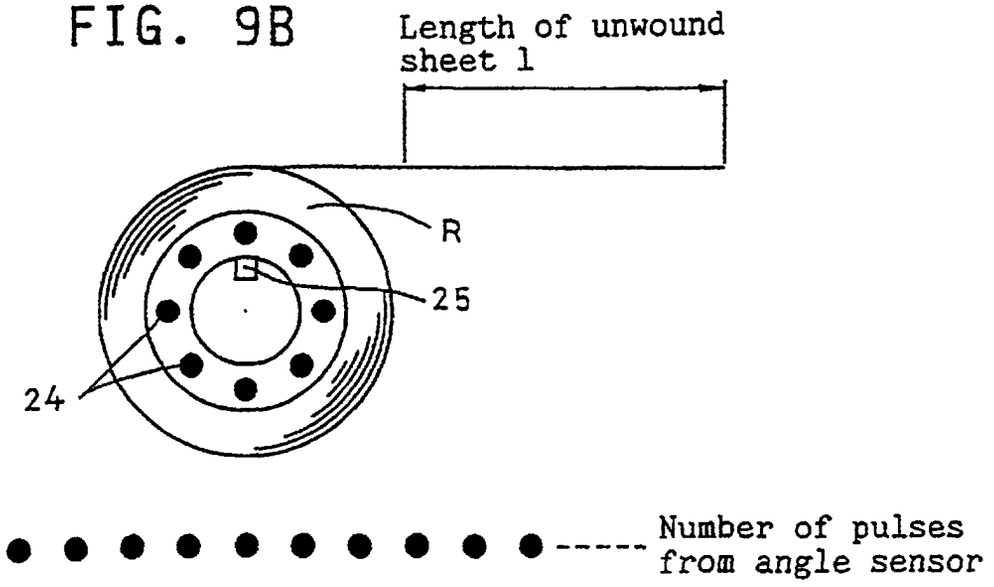
Length of unwound sheet l
R
25
24
Number of pulses from angle sensor

FIG.10

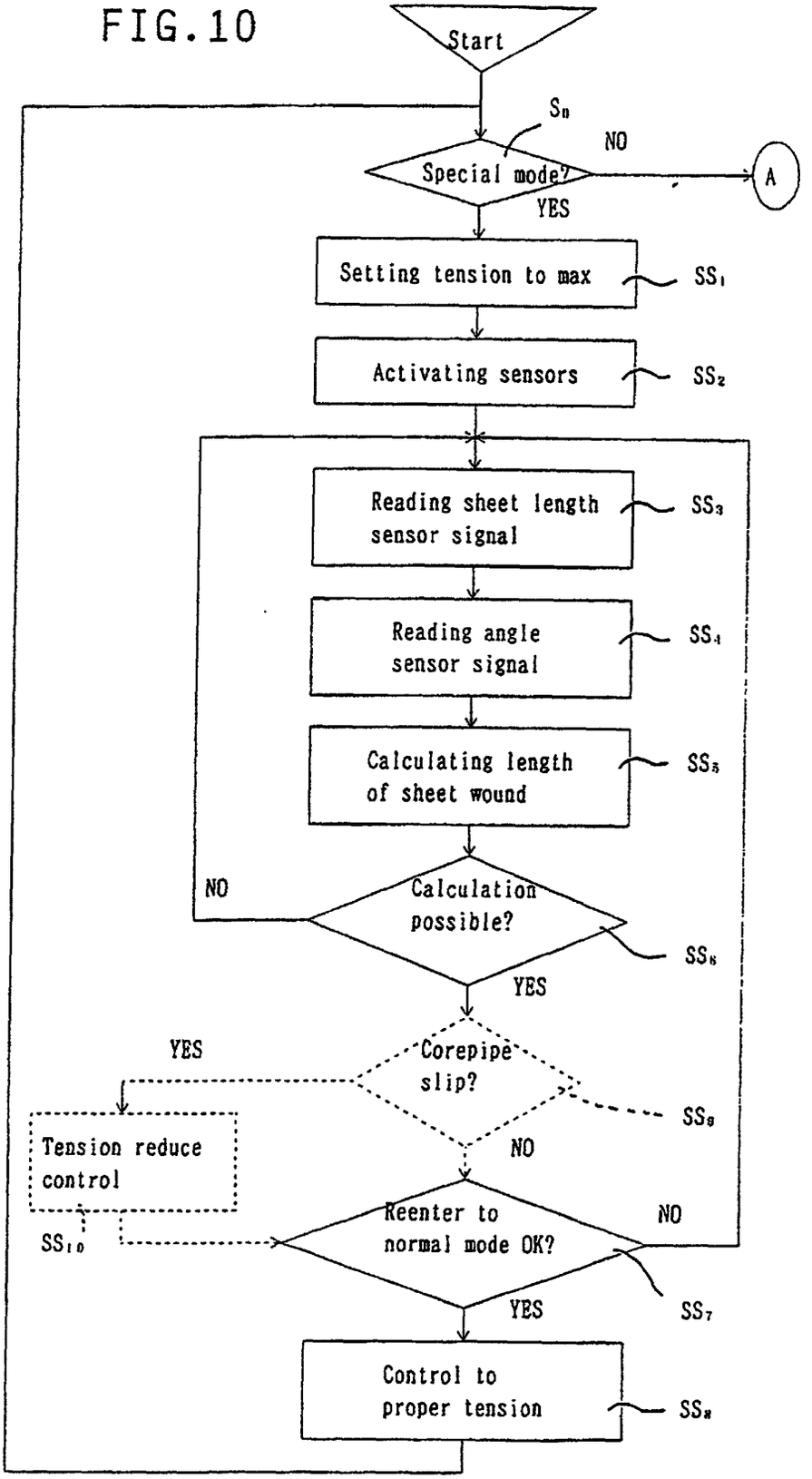
Start
Sn
Special mode?
NO
A
YES
Setting tension to max
SS1
Activating sensors
SS2
Reading sheet length sensor signal
SS3
Reading angle sensor signal
SS4
Calculating length of sheet wound
SS5
NO
Calculation possible?
SS6
YES
YES
Corepipe slip?
SS9
Tension reduce control
NO
SS10
Reenter to normal mode OK?
NO
YES
SS7
Control to proper tension
SS8

FIG.11

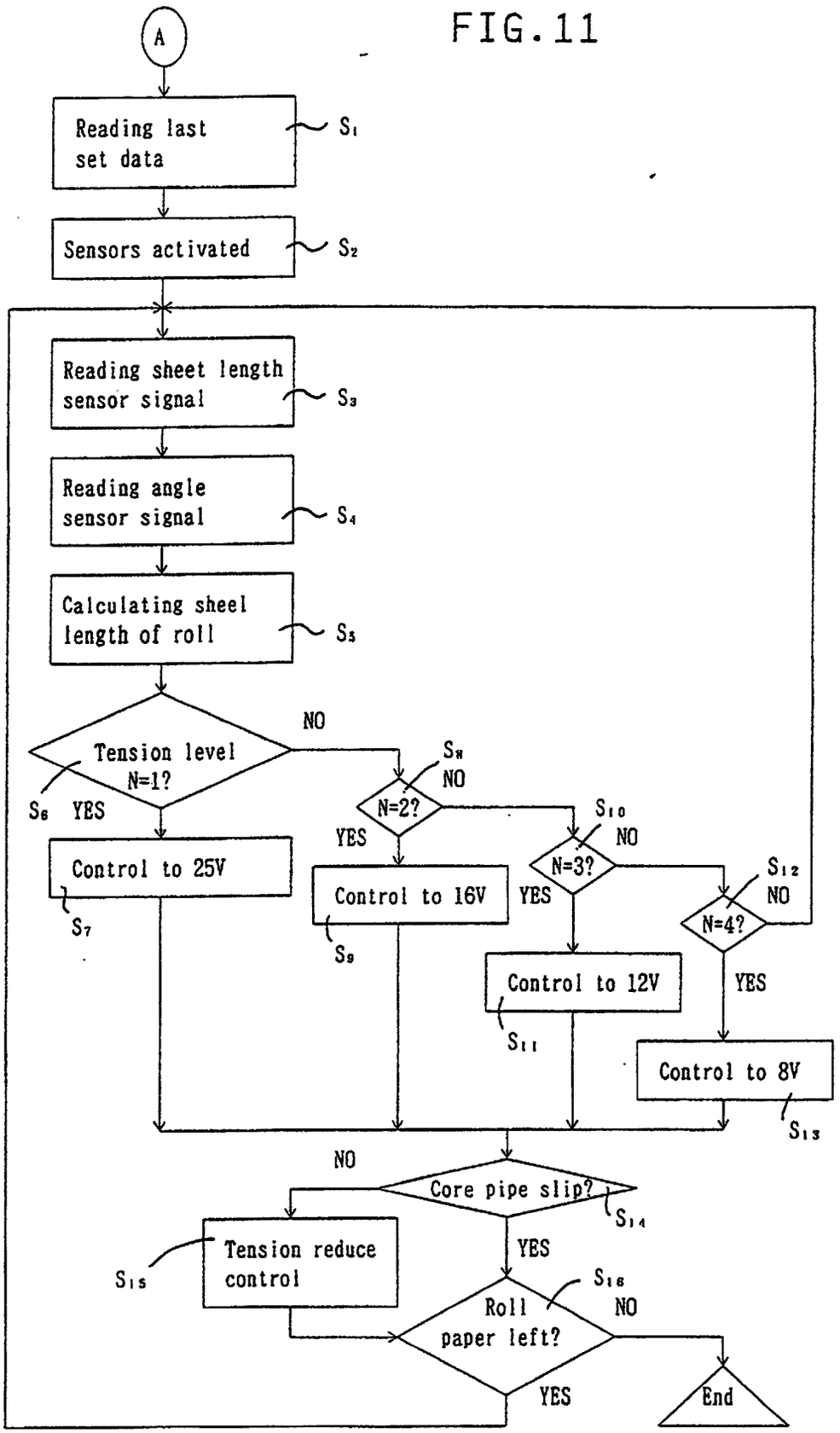
A
Reading last set data
S1
Sensors activated
S2
Reading sheet length sensor signal
S3
Reading angle sensor signal
S4
Calculating sheel length of roll
S5
Tension level N=1?
S6
YES
NO
Control to 25V
S7
N=2?
S8
NO
YES
Control to 16V
S9
N=3?
S10
NO
YES
Control to 12V
S11
N=4?
S12
NO
YES
Control to 8V
S13
Core pipe slip?
S14
NO
YES
Tension reduce control
S15
Roll paper left?
S16
NO
YES
End

FIG.12

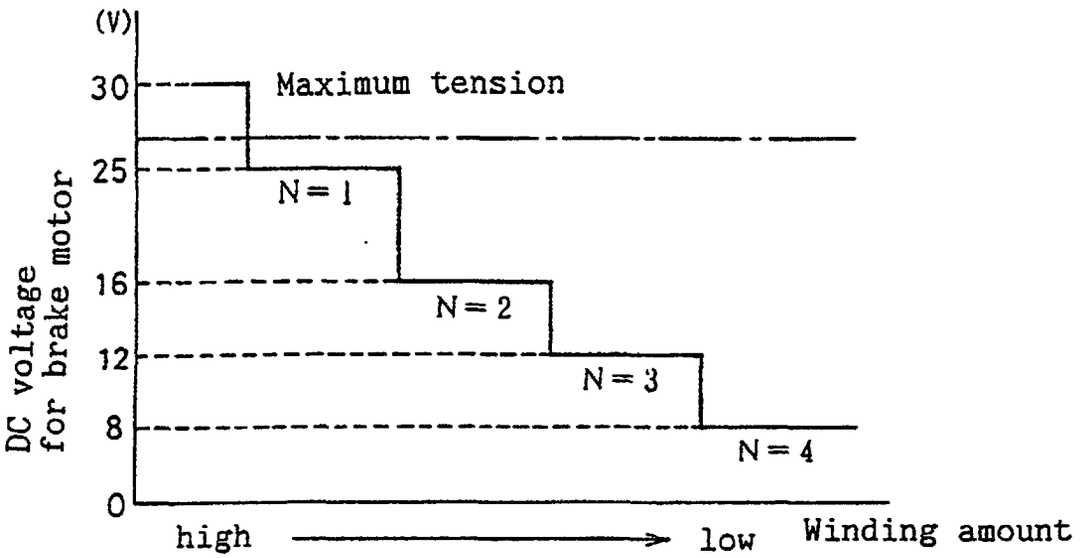
(V)
30
25
16
12
8
0
Maximum tension
N = 1
N = 2
N = 3
N = 4
DC voltage for brake motor
high
low
Winding amount

FIG.13

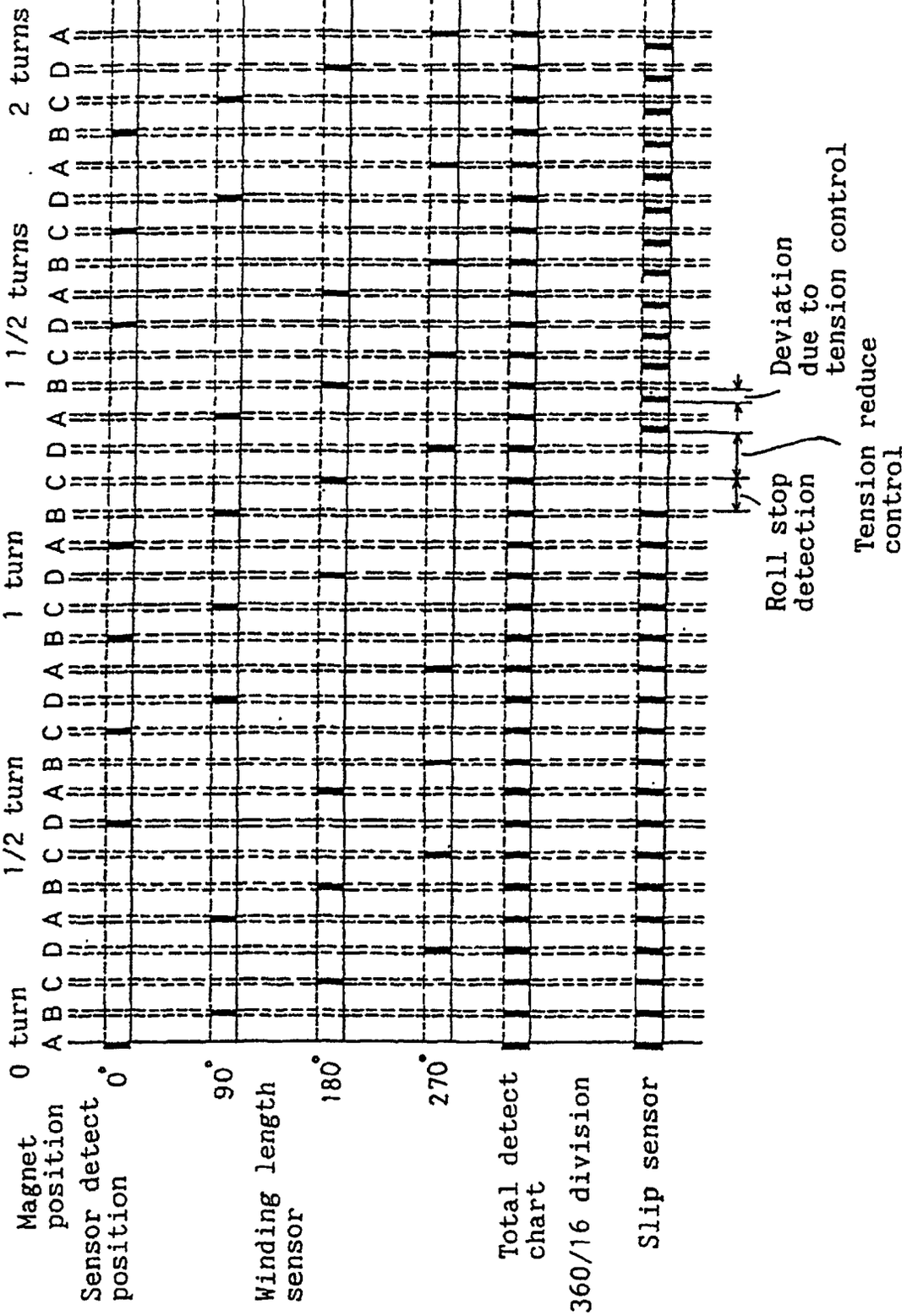
Magnet position
Sensor detect position
0°
90°
180°
270°
Winding length sensor
Total detect chart
360/16 division
Slip sensor
0 turn
1/2 turn
1 turn
1 1/2 turns
2 turns
A B C D A B C D A B C D A B C D A
Roll stop detection
Deviation due to tension control
Tension reduce control