Dec. 21, 1954 U. F. LUEBBEN 2,697,615

ADJUSTABLE VEHICLE TONGUE

Filed Aug. 31, 1951 3 Sheets-Sheet 1

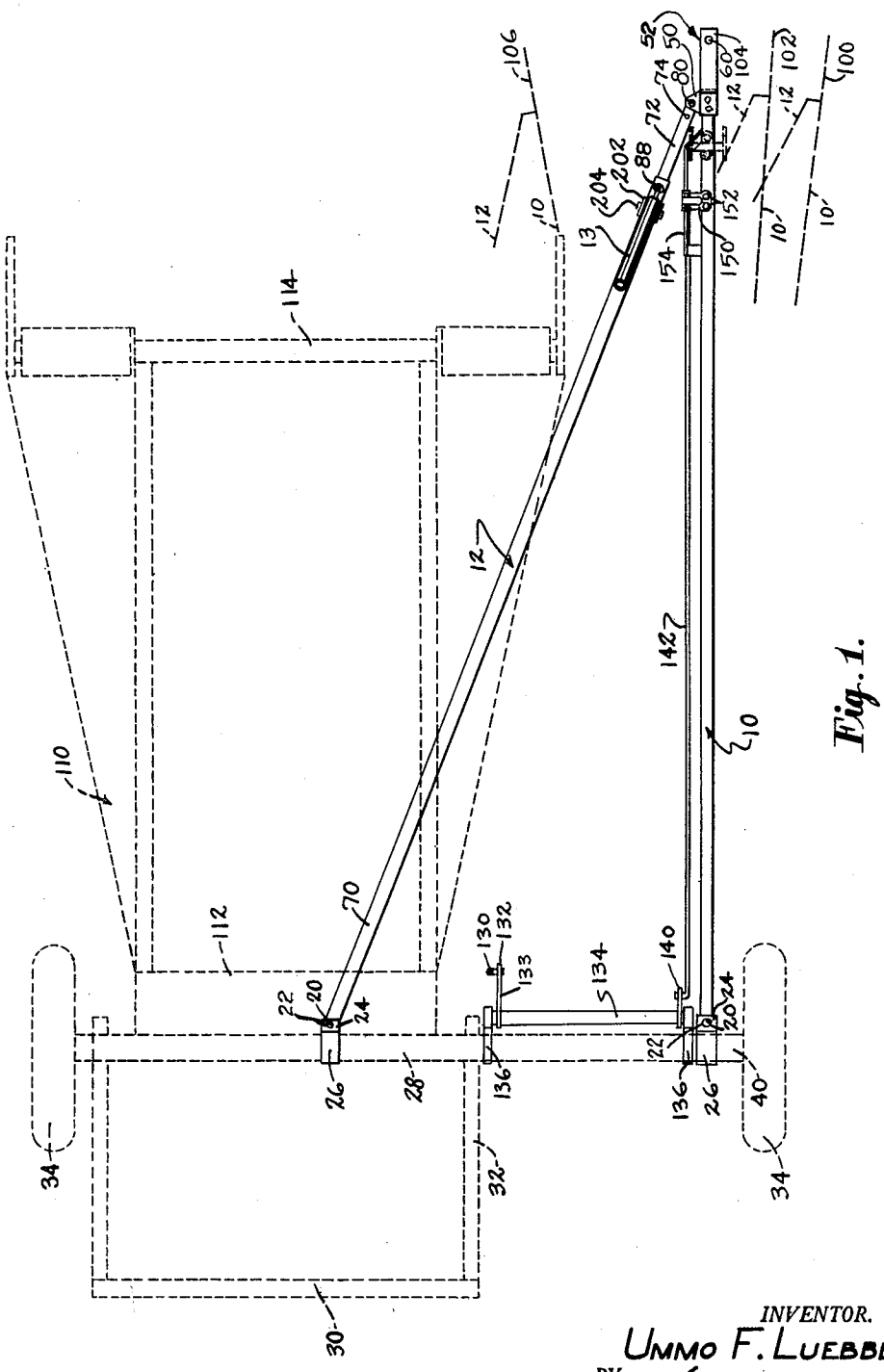

Fig. 1.

INVENTOR.
UMMO F. LUEBBEN
BY

Dec. 21, 1954 U. F. LUEBBEN 2,697,615

ADJUSTABLE VEHICLE TONGUE

Filed Aug. 31, 1951 3 Sheets-Sheet 2

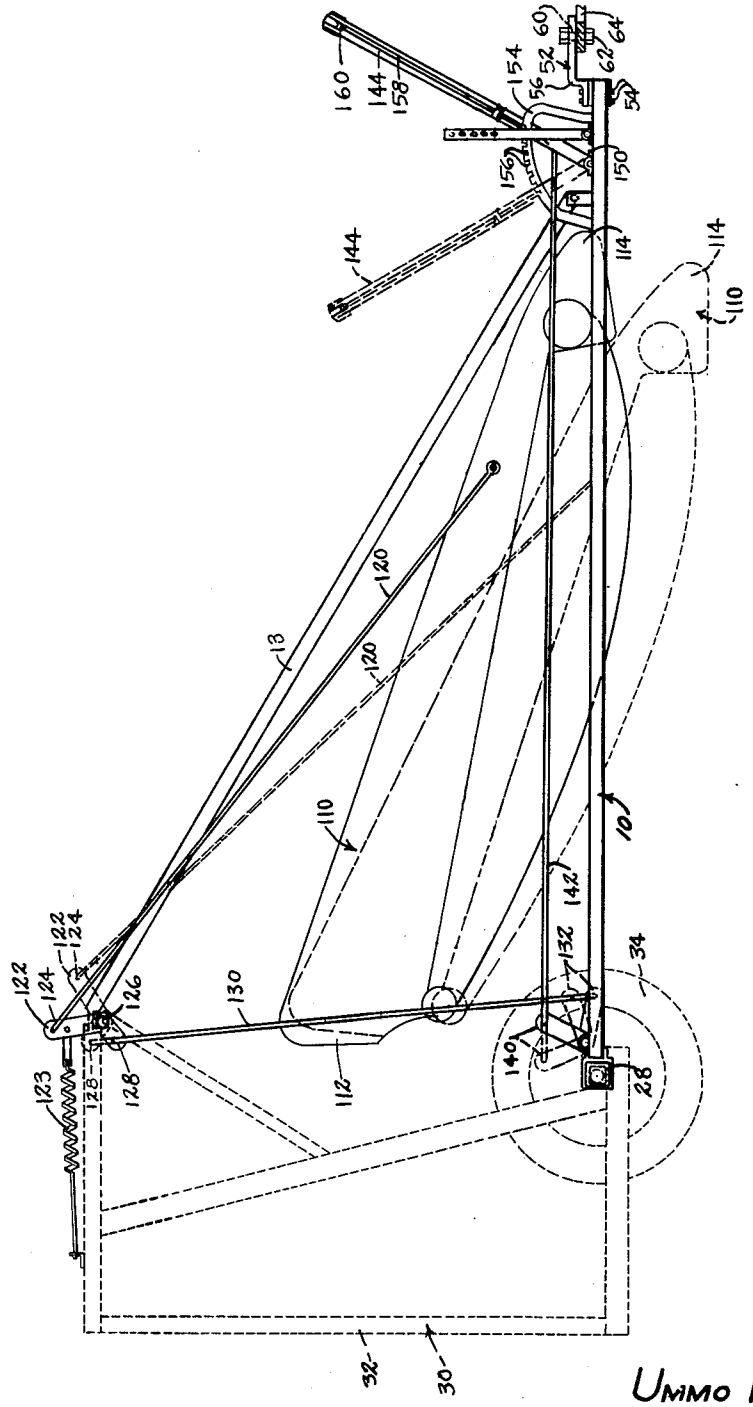

Fig. 2.

INVENTOR.
UMMO F. LUEBBEN
BY

Dec. 21, 1954 U. F. LUEBBEN 2,697,615

ADJUSTABLE VEHICLE TONGUE

Filed Aug. 31, 1951 3 Sheets-Sheet 3

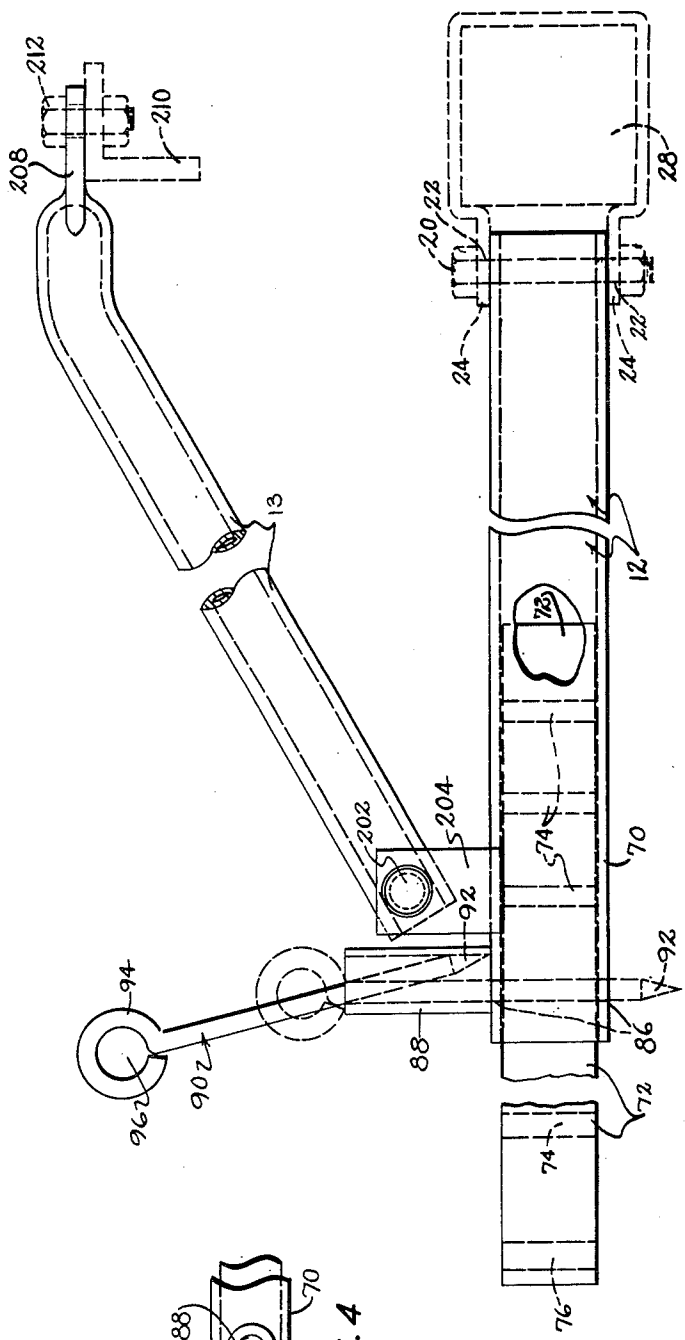

Fig. 3.

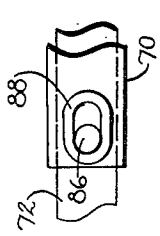

FIG. 4

INVENTOR.
UMMO F. LUEBBEN
BY
A. Hiram Sturges

United States Patent Office

2,697,615

Patented Dec. 21, 1954

2,697,615

ADJUSTABLE VEHICLE TONGUE

Ummo F. Luebben, Omaha, Nebr.

Application August 31, 1951, Serial No. 244,569

2 Claims. (Cl. 280—462)

This invention relates to rotary balers of the type described in my previous patents issued to U. F. Luebben, both titled "Rotary Baler," Nos. 2,336,491, issued December 6, 1943, and 2,096,990, issued October 26, 1937.

It is an object of this invention to provide improvements upon the towing tongue now being used on this type of machinery.

Balers of this type trail to one side of the tractor when in operation and must trail more directly behind the tractor for highway travel. At present, to adjust the position of the baler with respect to the tractor, it is necessary for an operator to climb down from his tractor and pull out pins, then manually and laboriously swing the machine to the new position.

It is a primary object of this invention to provide an adjustable tongue for a rotary baler which will make it possible for the operator to make the above-described adjustment, without having to leave the seat of his tractor, by utilizing the power of the tractor without manual labor.

Another object of the invention is to provide a tongue which can be adjusted to more than two different positions so that the position of the baler can be adjusted for the widths of tractors of different sizes, thus eliminating the necessity of having the baler farther to the side than is necessary with a smaller tractor.

A further object is to have the baler position with regard to the tractor and windrow adjustable as described for proper central feeding of the machine.

Yet a further object is to provide a tongue assembly in which adjustable members are telescopically disposed one within another rather than being pivotally connected, thus providing greater strength.

Still another object of the invention is to provide an improved lock-pin assembly in which the use of chains is eliminated, the lock-pin being in an easily reachable position.

Still other objects are to provide an easily adjustable tongue assembly of greatly reduced weight, of reduced cost, of greatly simplified construction, of greater rigidity, and with greater adjustability.

Yet another object of the invention is to provide a device for the purpose described which is sturdy and durable in construction, reliable and efficient in operation, and relatively simple and inexpensive to manufacture, assemble and utilize.

In the drawings:

Figure 1 is a plan view of the adjustable tongue of this invention. A portion of a baling machine and various positions of the tongue are shown in dotted lines.

Figure 2 is a side elevation view of the adjustable tongue of this invention. A portion of a baling machine frame is shown in dotted lines.

Figure 3 is an enlarged side elevation view of the telescoping portion of the tongue of this invention, portions of the baling machine and one position of a locking pin being shown in dotted lines.

Figure 4 is an enlarged plan view of a portion of Figure 3.

Referring now to the drawings in detail and first to Figure 1, the adjustable tongue of this invention generally includes a normally horizontal elongated rigid longitudinal tongue portion **10**, a normally horizontal telescoping portion **12** and a later described upwardly extending brace portion **13**.

The rearward ends of the rigid portion **10** and the telescoping portion **12** are laterally spaced apart, and each

are pivotally disposed about bolts **20** for rotation in a horizontal plane.

Each of the bolts **20** are vertically disposed through apertures **22**, the latter being disposed through the forwardly extending ends **24** of a hinge bracket **26**.

The brackets **26** are preferably of strap metal and are welded or otherwise secured around the outside of a transversely disposed normally horizontal axle **28** of the baling machine **30**.

As best seen in Figure 1 the baling machine **30** has a generally rectangular frame **32**, the latter being disposed rearwardly from the axle **28**, and at least two laterally spaced apart wheels **34**, one of which latter is rotatably mounted on each end of the axle **28**. One end **40** of the axle **28** extends outwardly from the side of the frame **32**.

The bracket **26**, upon which the rigid portion **10** is mounted, is disposed on the end **40** of the axle **28** and adjacent to the inner side of the wheel **34**. The bracket **26**, upon which the telescoping portion is mounted, is disposed adjacent to the center of the length of the axle **28**.

As best seen from the side in Figure 2 the rigid portion **10** is rectangularly shaped. A pair of flat sheet metal brackets **50** are secured one each to the top and bottom surfaces of the extreme forward end of the rigid portion **10**, and extend to one side thereof.

A tongue extension **52** is secured to the forward end of the longitudinal portion **10**, having a portion of its bottom surface secured against the upper surface of the upper one of the brackets **50**, by bolts **54**. The extension **52** may be described as being rectangular as would be seen from the plan view, and has an upwardly extending offset portion **56** adjacent the center thereof and a forwardly extending horizontal portion **58**.

The extension **52** has a vertically disposed aperture **60** through the forward end thereof to receive a bolt **62**. The extension **52** is secured to a tractor drawbar **64** by the bolt **62**.

As best seen in Figure 3 the telescoping portion **12** comprises a sleeve **70**, the latter being rectangular in shape as will be seen from the left hand end. An elongated rectangular shaped forward member **72** having a plurality of vertically disposed apertures **74** therethrough is telescopically disposed in the forward end of the sleeve **70**. The member **72** has yet another vertically disposed aperture **76** at the front end thereof, which latter is pivotally disposed about a bolt **80**, and between the laterally extending portions of the brackets **50**.

The sleeve **70** is provided with a vertically disposed aperture **86** through both the upper and lower walls thereof. A vertically extending hollow pipe **88** which latter is oblong in shape, as will be seen from the plan view, has its bottom end welded or otherwise secured to the upper surface of the member **70** in such a manner that the forward end of its hollow interior is an axial alignment with the aperture **86**.

The invention further provides a locking pin **90**, which latter is preferably made from a steel rod having one lower pointed end **92** and one upper end **94** bent into a circular shape leaving an aperture **96** therethrough so that it may be easily grasped by the operator and removed.

The pin is shown in full lines in the adjusting position where the lower pointed end **92** is disposed slightly to the rear of the aperture **86**, and the body of the pin **90** is leaning against the forward portion of the interior surface of the pipe **88**. The pin **90** is shown in dotted lines in the position that it assumes when it engages the apertures **86** and a selected one of the apertures **74** at such times as the telescoping action of the member **72** brings the aperture **74** into axial alignment with the aperture **86**.

As is best seen in Figure 1, the tongue extension **52** at the forward end of the members **10** and **12** may be locked in any selected one of the positions **100**, **102**, **104** and **106**.

The positions **100**, **102** and **104** are for towing the machine **30** during the baling operation. The position **106** is for towing the machine **30** during road travel.

The baling machine **30** is provided with a forwardly and downwardly inclined pick-up conveyor of the number **110** which latter is trapezoidal in outline as seen from the plan view.

The rear or small end **112** of the conveyor is pivotally mounted on the forward portion of the baler frame **32** and directly above the rearward end of the telescoping member **12**.

The lower forward or wide end **114** of the conveyor **110** is adapted to follow along the surface of the ground during baling operations, and to rest on the upper surface of the forward end of the member **12** when the tongue is in the position **106**.

In Figure 2 the transporting position of the conveyor **110** is shown in full lines and the position for operation is shown in dotted lines.

The conveyor **110** is raised and lowered by a pair of upwardly and rearwardly inclined link rods **120**, best seen in Figure 2, each of the rods **120** has its lower end pivotally attached to one side of the conveyor **110** and its upper end pivotally attached to an upwardly and forwardly extending leg **122** of a bellcrank **124**.

Each of the bellcranks **124** is rigidly mounted at one end of a shaft **126**, the latter being journaled at the upper forward end of the frame **32**. One of the bellcranks **124** is provided with a downwardly and rearwardly extending leg **128** that is integral with the leg **122**.

Each of a pair of rearwardly extending coiled springs **123** have one end secured to the leg **122** and the other to the top of the frame **32**, and the springs **123** balance most of the weight of the forward end of the conveyors **110**.

A vertically disposed link rod **130** has its upper end pivotally attached to the leg **128**, and its lower end pivotally attached to the forward end **132** of a forwardly extending lever **133**, the rearward end of which latter is mounted on a transversely disposed shaft **134**.

The shaft **134** has its ends journaled in bearing brackets **136**, which latter are welded or otherwise secured to the axle **28**.

One of the brackets **136** is disposed adjacent to the baler frame **32**, and the other is disposed adjacent to the inner side of the bracket **26** on the end **40** of the axle **28**.

An elongated forwardly extending link rod **142** has its rearward end pivotally attached to the upper end of the lever **140** and its forward end pivotally attached near the bottom of a conveyor lift lever **144**. The lever **144** has its lower end pivotally attached to a bracket **150** and extends upwardly therefrom.

The bracket **150** is secured near the forward end of the member **10** by bolts **152**, and extends to one side thereof in the direction of the member **12**. A lever quadrant **154** has each of its lower ends attached to the side of the member **10** on opposite sides of the bracket **150**, the outline of the quadrant **154** being an arc having the bracket **150** as a center.

The quadrant **154** is provided with a plurality of teeth **156** cut into the upper arcuate surface thereof to engage the lower end of a pawl **158**, the latter being in the form of an elongated rod having its upper end pivotally attached to a transversely disposed lever handle **160**, the latter being pivotally mounted to the upper end of the lever **144**.

As thus described, forward and rearward motions of the lift lever **144** will cause the conveyor **110** to be raised and lowered.

The invention is further provided with the before mentioned inclinedly disposed frame brace **13** best seen in Figures 2 and 3; the brace **13** being preferably of tubular pipe, having its lower end secured by a bolt **202** between a pair of rectangularly shaped brackets **204**.

The brackets **204** are welded or otherwise secured to the sides of the member **70** and extend upwardly therefrom.

As best seen in Figure 3, the upper and rearward end of the brace **13** has a short portion bent to a horizontal position, and its most rearward end **208** flattened.

The flattened end **208** is pivotally attached to an upper forward member **210** of the frame **32** at a position directly above the rearward end of the member **70** by a bolt **212** for rotation therewith.

It will be understood that the pivot bolt **212** should be approximately directly above and aligned with the pivot bolt **20** of the telescoping member **70**, but that certain misalignment is permissible because of the long length of the brace **13** and telescoping assembly **12** yet still affording approximately horizontal swinging.

From the foregoing description, it is thought to be obvious that an adjustable tongue constructed in accordance with my invention is particularly well adapted for use, by reason of the convenience and facility with which it may be assembled and operated, and it will also be obvious that my invention is susceptible of some change and modification without departing from the principles and spirit thereof, and for this reason I do not wish to be understood as limiting myself to the precise arrangement and formation of the several parts herein shown in carrying out my invention in practice, except as claimed.

I claim:

1. A towing tongue assembly for a rotary baler comprising: an elongated longitudinal member pivotally attached at its rearward end to the axle of said baler at one end of said baler axle for pivotal movement in a horizontal plane; outer and inner telescoping members having adjustable combined effective length, said inner member having a plurality of longitudinally spaced apertures therethrough, said outer member having an aperture therethrough registerable with any selected one of said inner member apertures; an upwardly extending annular pin-holding member having its lower end attached to said outer member and opening onto its said aperture, said annular member being of large inner diameter at its lower end than said outer member aperture; a pin in said annular member supportable at times on said outer member adjacent said outer member aperture and disposable at other times through said outer member aperture and through a selected one of said inner member apertures, one of said telescoping members having a rearward end pivotally attached to said baler axle at a point adjacent the center of said axle, the other of said telescoping members having a forward end pivotally attached to said longitudinal member for pivotal movement in a horizontal plane; and means for attaching the forward end of said longitudinal member to a towing vehicle.

2. A towing tongue assembly for a rotary baler having a frame comprising: an elongated longitudinal member pivotally attached at its rearward end to the axle of said baler at one end of said baler axle for pivotal movement in a horizontal plane; two telescoping members having adjustable combined effective length, one of said telescoping members having a rearward end pivotally attached to said baler axle at a point adjacent the center of said axle, the other of said telescoping members having a forward end pivotally attached to said longitudinal member for pivotal movement in a horizontal plane; means for locking said telescoping members together in any one of a plurality of positions to vary said combined effective length for variable adjustment of the position of the forward end of said longitudinal member with respect to said baler; and a brace member extending from the forward end of said one telescoping member upwardly and rearwardly, the rearward end of said brace being pivotally secured to said baler frame approximately directly above the pivotally attached rearward end of said one telescoping member.

References Cited in the file of this patent

UNITED STATES PATENTS

Number	Name	Date
794,850	Bryan	July 18, 1905
1,408,672	Wills	Mar. 7, 1922
1,906,606	Hyman	May 2, 1933
2,457,745	Suess	Dec. 28, 1948