COMMONWEALTH OF AUSTRALIA

PATENTS ACT 1952

DECLARATION IN SUPPORT OF CONVENTION OR NON-CONVENTION APPLICATION FOR A PATENT

In support of the Application made for a patent for an invention entitled: "ROTARY TYPE MOLDING MACHINE"

Insert title of invention.

Insert full name(s) and address(es) of declarant(s) being the applicant(s) or person(s) authorized to sign on behalf of an applicant company.

I / ~~We~~ DAIICHI AOKI,
c/o Nissei ASB Machine Co., Ltd.,
6100-1, Chazaminamijo, Sakakimachi,
Hanishina-gun, Nagano-ken,
JAPAN.

do solemnly and sincerely declare as follows :-

Cross out whichever of paragraphs 1(a) or 1(b) does not apply

1(a) relates to application made by individual(s)

1(b) relates to application made by company; insert name of applicant company.

1. (a) ~~I / We are~~

or (b) I am authorized by NISSEI ASB MACHINE CO., LTD.

the applicant..... for the patent to make this declaration on ~~its~~ behalf.

Cross out whichever of paragraphs 2(a) or 2(b) does not apply

2(a) relates to application made by inventor(s)

2(b) relates to application made by company(s) or person(s) who are not inventor(s); insert full name(s) and address(es) of inventors.

2. (a) ~~I / We are~~

or (b) Yoshinori Nakamura, c/o Nissei ASB Machine Co., Ltd. 6100-1, Ohazaminamijo, Sakakimachi, Hanishina-gun, Nagano-ken, JAPAN.

~~is~~ the actual inventor..... of the invention and the facts upon which the applicant..... ~~is~~ entitled to make the application are as follows :-

State manner in which applicant(s) derive title from inventor(s)

The applicant would, if a patent were granted upon an application made by the said actual inventor, be entitled to have the patent assigned to it.

Cross out paragraphs 3 and 4 for non-convention applications. For convention applications, insert basic country(s) followed by date(s) and basic applicant(s).

3. The basic application...S..... as defined by Section 141 of the Act ~~was~~ / were made

in Japan on the 17th July, 1987

by Nissei ASB Machine Co., Ltd.

in Japan on the 15th July, 1988

by Nissei ASB Machine Co., Ltd.

in ..... on the .....

by .....

4 The basic application...S..... referred to in paragraph 3 of this Declaration ~~was~~ / were the first application S..... made in a Convention country in respect of the invention the subject of the application.

Insert place and date of signature.

Declared at Nagano-ken this 8th day of April 1991

Signature of declarant(s) (no attestation required)

DAIICHI AOKI President

Note Initial all alterations.

Daiichi Aoki

DAVIES & COLLISON, MELBOURNE and CANBERRA.

(12) PATENT ABRIDGMENT (11) Document No. AU-B-20768/88
(19) AUSTRALIAN PATENT OFFICE (10) Acceptance No. 612391

(54) Title
ROTARY MOLDING MACHINE

(51)[4] International Patent Classification(s)
B29C 049/36 B29C 045/06 B29C 049/06 B29C 049/08

(21) Application No. : 20768/88 (22) Application Date : 18.07.88

(87) PCT Publication Number : WO89/00491

(30) Priority Data

(31) Number	(32) Date	(33) Country
62-179595	17.07.87	JP JAPAN
63-176419	15.07.88	JP JAPAN

(43) Publication Date : 13.02.89

(44) Publication Date of Accepted Application : 11.07.91

(71) Applicant(s)
NISSEI ASB MACHINE CO., LTD.

(72) Inventor(s)
YOSHINORI NAKAMURA

(74) Attorney or Agent
DAVIES & COLLISON , 1 Little Collins Street, MELBOURNE VIC 3000

(57) Claim

1. A rotary molding machine, comprising:

a machine bed;

a plurality of operational stations disposed on the machine bed, including an injection molding station, a temperature control station, an orientation blow molding station, and a molded product removing station;

a transfer plate disposed above the machine bed, rotating means for rotating the transfer plate about an axis and moving means for moving the transfer plate vertically along said axis, up and down relative to said machine bed;

a plurality of lip molds supported by the transfer plate, said lip molds being effective for interacting with said operational stations located on said machine bed;

said moving means comprising a stationary cylinder having a piston movable therein, said piston coupled to said transfer plate and effective for moving the same vertically up and down; and

said rotating means comprising a stationary rotating driving device having a driving shaft coupled to said piston and effective to rotate said piston to thereby rotate said transfer plate, said driving shaft being flexibly coupled to said piston in a manner which maintains a driving connection with said piston in all vertical positions of said piston.

AU-AI-20768/88

PCT

世界知的所有権機関
国際事務局

特許協力条約に基づいて公開された国際出願

(51) 国際特許分類 4
B29C 49/36, 49/06, 49/08
B29C 45/06 // B29L 22:00

A1

(11) 国際公開番号 WO 89/ 00491

(43) 国際公開日 1989年1月26日 (26.01.89)

(21) 国際出願番号 PCT/JP88/00712
(22) 国際出願日 1988年7月18日 (18. 07. 88)
(31) 優先権主張番号 特願昭62-179595
特願昭63-176419
(32) 優先日 1987年7月17日 (17. 07. 87)
1988年7月15日 (15. 07. 88)
(33) 優先権主張国 JP

(71) 出願人（米国を除くすべての指定国について）
日精エー・エス・ビー機械株式会社
(NISSEI ASB MACHINE CO., LTD.) (JP/JP)
〒389-06 長野県埴科郡坂城町大字南条6100番地1 Nagano, (JP)
(72) 発明者；および
(75) 発明者／出願人（米国についてのみ）
中村喜則 (NAKAMURA, Yoshinori) (JP/JP)
〒389-06 長野県埴科郡坂城町大字南条6100番地1
日精エー・エス・ビー機械株式会社内 Nagano, (JP)
(74) 代理人
弁理士 秋元輝雄，外 (AKIMOTO, Teruo et al.)
〒107 東京都港区南青山1丁目1番1号 Tokyo, (JP)

(81) 指定国
AT (欧州特許), AU, BE (欧州特許), CH (欧州特許),
DE (欧州特許), FR (欧州特許), GB (欧州特許), IT (欧州特許),
KR, LU (欧州特許), NL (欧州特許), SE (欧州特許), US.
添付公開書類 国際調査報告書

R.O.J.P. 6 APR 1989

AUSTRALIAN
13 FEB 1989
PATENT OFFICE

(54) Title: ROTARY MOLDING MACHINE
(54) 発明の名称 回転式成形機

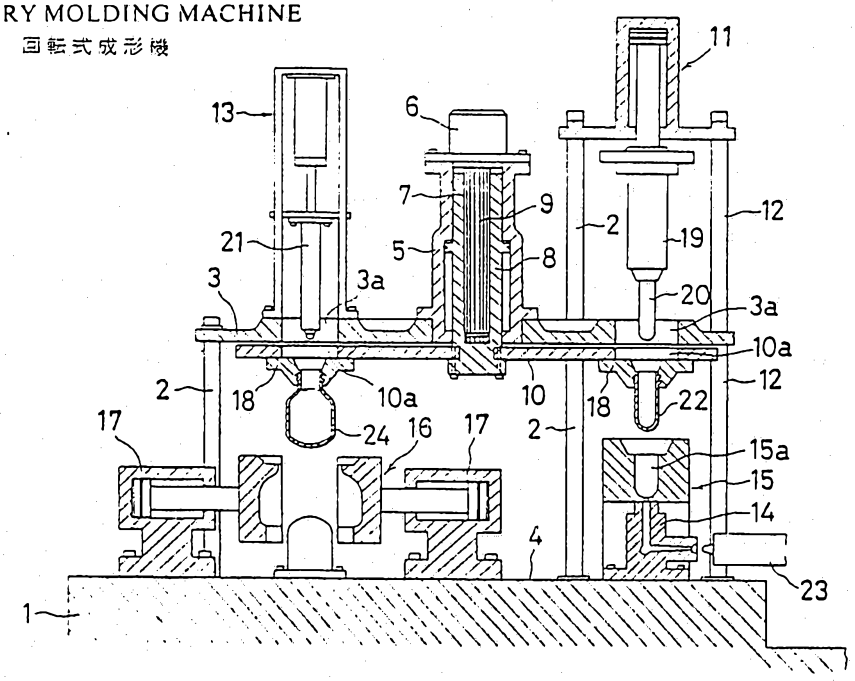

(57) Abstract

This invention relates to a rotary molding machine for molding a preform and hollow molded articles having a construction wherein a round transfer disc (10) having lip molds (18) at four sides of the lower side surface is supported rotatably at the center by a rotary shaft above a machine bed (1), and the stop positions of the lip molds (18) are used respectively as an injection molding operation part, a temperature controlling part, a stretch-blow molding operation part and a molded article withdrawing part to dispose molds (15, 16) and other devices. The rotary shaft of the transfer disc (10) consists of a piston (8) of an elevation cylinder (5) and this piston (8) and a driving shaft (7) of a driving device (6) for intermittent rotation are connected in a free state with respect to an axial direction so that the piston (8) can move up and down or intermittently rotate the transfer disc (10) with respect to each mold (15, 16).

(57)要約

この発明は下側面の四方にリップ型（１８）を有する円形の移送盤（１０）を、回転軸により盤体中央を支持して機台（１）の上方に回転自在に設け、上記リップ型（１８）の停止位置を順に射出成形操作部、温調操作部、延伸吹込成形操作部、成形品取出操作部として金型（１５，１６）及び各装置を配設したプリフォームと中空成形品成形用の回転式成形機であって、上記移送盤（１０）の回転軸を昇降用シリンダ（５）のピストン（８）をもって構成するとともに、該ピストン（８）と間欠回転用の駆動装置（６）の駆動軸（７）とを軸方向に対しては自由な状態の下に連結して、移送盤（１０）をピストン（８）により各金型（１５，１６）に対し上下動及び間欠回転自在に設けてなるものである。

情報としての用途のみ

PCTに基づいて公開される国際出願のパンフレット第1頁にPCT加盟国を同定するために使用されるコード

AT オーストリア	FR フランス	MR モーリタニア
AU オーストラリア	GA ガボン	MW マラウイ
BB バルバドス	GB イギリス	NL オランダ
BE ベルギー	HU ハンガリー	NO ノルウエー
BG ブルガリア	IT イタリー	RO ルーマニア
BJ ベナン	JP 日本	SD スーダン
BR ブラジル	KP 朝鮮民主主義人民共和国	SE スウエーデン
CF 中央アフリカ共和国	KR 大韓民国	SN セネガル
CG コンゴー	LI リヒテンシュタイン	SU ソビエト連邦
CH スイス	LK スリランカ	TD チャード
CM カメルーン	LU ルクセンブルグ	TG トーゴ
DE 西ドイツ	MC モナコ	US 米国
DK デンマーク	MG マダガスカル	
FI フィンランド	ML マリー	

COMMONWEALTH OF AUSTRALIA

PATENTS ACT 1952

COMPLETE SPECIFICATION

NAME & ADDRESS
OF APPLICANT:

Nissei ASB Machine Co., Ltd.
6100-1, Ohazaminamijo, Sakakimachi
Hanishina-gun
Nagano-ken
Japan

NAME(S) OF INVENTOR(S):

Yoshinori NAKAMURA

ADDRESS FOR SERVICE:

DAVIES & COLLISON
Patent Attorneys
1 Little Collins Street, Melbourne, 3000.

COMPLETE SPECIFICATION FOR THE INVENTION ENTITLED:

Rotary type molding machine

The following statement is a full description of this invention, including the best method of performing it known to me/us:-

Technical Field

This invention relates to a rotary type molding machine which can be utilized for a continuous molding of a preform or in the case where molding of a preform to orientation blow molding of a hollow molded product are continously carried out.

Background of Art

The rotary type molding machine of the type as described includes one type having a construction in which a base plate is secured upwardly of a machine bed, and an injection mold device is disposed movably up and down with respect to a transfer plate provided intermittently rotatably on the underside of the base plate, said injection mold device being moved up and down to effect clamping, and the other having a construction in which an injection mold device side is secured to a machine bed side, a base plate side is disposed movably up and down opposedly, and a rotary plate is moved down together with the base plate to effect clamping.

The former machine in which the base plate and the transfer plate are fixed has problems that since the

injection mold device is moved up and down every injection molding of a preform, an injection nozzle need be separated every time and therefore starting of measurement of resins as material is delayed; and drooling or wire-drawing occur every time the injection nozzle is separated according to the resins, and as a result, marginal portions of the injection nozzle or mold gate become stained and in addition a sprue gate is damaged by the resins adhered to the injection nozzle.

The latter machine has been developed in which the base plate side is moved up and down in order to solve such problems. However, this molding machine involves a problem that the transfer plate, the driving device therefor and various other devices required for molding are also moved up and down together with the base plate, and therefore the vertically-moving weight is great and as the molding machine becomes large in size, the vertically-moving speed is restricted, making it difficult to open and close the lip mold at the high speed. Particularly, when the vertically-moving stroke increases, the downwardly moving speed is accelerated so that the lip mold comes into collision with the mold, thus requiring a buffer means. An injection orientation blow molding machine for hollow molded products which are longitudinally lengthy such as bottles has been desired to be further improved.

It is an object of the present invention to provide an improved rotary molding machine which alleviates one or more of the aforementioned problems.

According to the present invention there is provided a rotary molding machine, comprising:

a machine bed; a plurality of operational stations disposed on the machine bed, including an injection molding station, a temperature control station, an orientation blow molding station, and a molded product removing station; a transfer plate disposed above the machine bed, rotating means for rotating the transfer plate about an axis and moving means for moving the transfer plate vertically along said axis, up and down relative to said machine bed; a plurality of lip molds supported by the transfer plate, said lip molds being effective for interacting with said operational stations located on said machine bed; said moving means comprising a stationary cylinder having a piston movable therein, said piston coupled to said transfer plate and effective for moving the same vertically up and down; and said rotating means comprising a stationary rotating driving device having a driving shaft coupled to said piston and effective to rotate said piston to thereby rotate said transfer plate, said driving shaft being flexibly coupled to said piston in a manner which maintains a driving connection with said piston in all vertical positions of said piston.

The aforesaid vertically-moving cylinder may comprise a hydraulic cylinder installed on a support body disposed upwardly of the machine bed or the base plate provided on the machine bed, and a hydraulic oscillating motor, a servomotor or the like as an intermittently rotating driving device is provided on the upper end or lower end of the first mentioned hydraulic cylinder.

The support body is not limited to a plate-like body but may be of a frame mounted over tie bars stood upright in the periphery of the machine bed. The piston for the vertically-moving cylinder serving as a rotary shaft and the driving shaft for the driving device are connected through a spline, the piston being rotated along with the driving shaft but only the piston being

AUSTRALIAN PATENT OFFICE

moved in an axial direction and moved up and down along with the transfer plate.

The aforementioned injection molding operation portion is equipped with an injection mold but the mold in the orientation blow molding operation portion is changed to a cooling mold when the rotary molding machine is used for continuous molding of a preform.

With the above-described structure, by the extension of the piston of the vertically-moving cylinder. The transfer plate is moved upward or downward so that the mold and lip molds are closed.

When the piston is contracted, the transfer plate is moved upward or downward so that the lip molds are separated from the mold and standby at a fixed level position. In such state, when the driving device is operated, the piston along with the driving shaft are rotated through the spline. Thereby, the transfer plate at the end of the piston also rotates so that the preform or molded product held by the lip mold rotates to the succeeding operation portion and stops.

The drawings schematically show example embodiments of

AUSTRALIAN PATENT OFFICE

a rotary type molding machine according to this invention. FIG. 1 is a longitudinal sectional side view when mold is opened in a first embodiment; FIG. 2 is a longitudinal sectional side view when mold is closed; FIG. 3 is a partly cutaway plan view; FIG. 4 is a longitudinal sectional view when mold is opened in a further embodiment; and FIG. 5 is a plan view. The drawings illustrates a rotary type molding machine in the case of carrying out injection orientation blow molding.

BEST MODE FOR CARRYING OUT THE INVENTION

FIGS. 1 and 2 are respectively longitudinal sectional side views of an injection molding operation portion and an orientation blow molding operation portion which are positioned opposedly, in which tie bars 2, 2 are stood upright at four locations in the periphery of a machine bed 1. A plate-like support body 3 is horizontally secured to the tie bars 2, 2 in a fixed spaced relation with a flat base plate 4 on the machine bed.

A hydraulically-operated vertically-moving cylinder 5 is longitudinally provided in the central portion of the support body 3, and an intermittently rotating driving device 6 in the form of a hydrualic oscillation motor whose rotational angle is 90° is connected to the top of the vertically-moving cylinder 5. A driving shaft 7 of the

AUSTRALIAN PATENT OFFICE

driving device 6 is inserted into a piston 8 of the vertically moving cylinder 5 and connected to the piston 8 by way of a spline 9.

A central portion of a transfer plate 10 is connected to the lower end of the piston 8 whereby the transfer plate 10 is moved up and down by the vertically-moving cylinder 5 and is intermittently rotated every angle of 90° by the driving device 7.

A working space is formed between the transfer plate 10 and the machine bed 1 for utilization similarly to the conventional molding machine of this kind, and four portions are utilized as an injection molding operation portion, a temperature control operation portion, an orientation blow molding operation portion and a molded production removing operation portion, respectively.

Upwardly of the transfer plate of the injection molding operation portion, a clamping device 11 in the form of a hyraulic cylinder is fixedly provided on the tie bars 2 and 12, and a temperature control device 25, an orientation blowing device 13 and a molded product removing device 26 are provided on the respective operation portions of the support body 3. Although not shown, an air cylinder for vertically moving members to be operated or the like is provided on each of these devices similarly to prior art devices.

AUSTRALIAN PATENT OFFICE

Furthermore, an injection mold 15 provided at its lower part with a hot runner block 14 is upwardly secured onto the base plate 4 of the injection molding operation portion, and a blow mold 16 is provided on the base plate 4 of the orientation blow molding operation portion so that it may be laterally opened and closed by hydraulically-operated opening and closing cylinders 17 and 17.

Four lip molds 18 and 18 for closing both the molds are provided in a fixed spaced relation in the periphery of the lower surface of the transfer plate 10, and an injection core 20 and a blow core 21 at the end of a clamping member 19 are inserted into the lip molds 18 and 18 while extending through the member receiving holes 3a and 10a from the support body 3 and the transfer plate 3.

In the above-described rotary type molding machine, when the vertically-moving cylinder 5 is operated to extend the piston 8, the transfer plate 10 lowers from the support body side to the mold side, one lip mold 18 is closed in connection with the injection mold 15, the other lip mold 18 is closed in connection with the blow mold 16, and a preform 22 assumes a position of a blow cavity 16a. When the clamping device 11 and the orientation blowing device 13 are downwardly operated after the mold has been closed, in the clamping device 11, the injection core 20 extends through the support body 3, the transfer plate 10 and the

AUSTRALIAN PATENT OFFICE

lip mold 18 and enters the injection cavity 15a, and the lower end of the clamping member 19 is pressed against the lip mold 18 to bring forth powerful clamping thereat. In the orientation blowing device 3, the orientation blow core 21 is inserted into a lip portion of the preform 22 from the member receiving holes 3a and 10a.

In the injection molding operation portion, the resin is poured into the injection cavity 15a from the injection device 23 to mold the preform 22, and in the orientation blow molding operation portion, the preform 22 is axially oriented and expanded to the mold surface of the blow cavity 16a by blowing compressed air to mold a hollow product 24.

After completion of the molding, the clamping device 11 and the orientation blowing device 13 are upwardly operated and returned to their original position, and the blow mold 16 is opened.

However, when the piston 9 of the vertically-moving cylinder 5 is contracted, the transfer plate 10 is returned to the original position in the state wherein the preform 22 and the molded product 24 are held on the lip molds 18 and 18. When the driving device 6 is then rotated through 90° counterclockwise, the transfer plate 10 also rotates along with the piston 9 through 90° to transfer the lip molds 18 and 18 to the succeeding operation portion.

AUSTRALIAN PATENT OFFICE

Accordingly, by alternately carrying out the expansion operation in the vertically-moving cylinder 5 and the rotational operation at fixed angle by the driving device 6, it is possible to continuously carry out opening and closing of the lip molds and the mold devices and intermittent rotational movement of the transfer plate.

In the embodiment shown in FIGS. 4 and 5, the vertically-moving cylinder 5 is installed upwardly directed on the base plate 4 provided on the machine bed 1, in which case the driving device 6 is also mounted superposed to the lower end of the vertically-moving cylinder 5 with the driving shaft 7 having the spline 9 in the periphery thereof directed upwardly.

In the case where the vertically-moving cylinder 5 is installed on the base plate 4, the support body in the aforesaid embodiment can be simplified, and the orientation blowing device 13, the temperature control device 25, the molded product removing device 26 and the like installed on the support body are individually independently instlled on the base plate 4 so that they may be moved up and down by the hydraulic cylinder 27.

In this embodiment, the transfer plate 10 is moved upward by the extension of the piston and moved downward by the contraction thereof. Other embodiment is operated in a manner similar to that of the previous embodiment

AUSTRALIAN PATENT OFFICE

except such point as noted above, and will not be further described with other parts indicated by the reference numerals in the drawings.

While the above-described embodiments have been described of the case where the rotary type molding machine is utilized as an injection orientation blow molding machine, it is to be noted in the present invention that the rotary type molding machine can be also utilized as a continuous injection molding machine for a preform. In this case, a blow molding device and a blow mold device are merely changed to a preform cooling device and a cooling mold device, though not shown in the drawings.

Moreover, the rotational angle is not limited to 90° but the rotational angle of 120°, 180° or the like can be used according to the number of the molding operation portions to be set.

INDUSTRIAL APPLICABILITY

In this invention, as mentioned above, the rotational shaft of the transfer plate is constituted by the piston for the vertically-moving cylinder, the piston and the driving shaft of the intermittently rotating driving device are connected in the state free with respect to the axial direction, and the transfer plate is provided so that the latter may be moved up and down and provided rotatably intermittently with respect to the molds. Therefore,

AUSTRALIAN PATENT OFFICE

the injection device can be always placed in nozzle touch with the injection mold secured to the machine bed for effecting molding. Furthermore, since only the transfer plate is moved up and down, the load is smaller than the prior art in which the upper base plate and the transfer plate are moved up and down, and even if the vertically-moving stroke is large, the high speed opening and closing can be carried out smoothly and the unbalance load, eccentricity and the like are hard to occur, whereby the machine of the present invention can be widely utilized.



THE CLAIMS DEFINING THE INVENTION ARE AS FOLLOWS:

1. A rotary molding machine, comprising:

a machine bed;

a plurality of operational stations disposed on the machine bed, including an injection molding station, a temperature control station, an orientation blow molding station, and a molded product removing station;

a transfer plate disposed above the machine bed, rotating means for rotating the transfer plate about an axis and moving means for moving the transfer plate vertically along said axis, up and down relative to said machine bed;

a plurality of lip molds supported by the transfer plate, said lip molds being effective for interacting with said operational stations located on said machine bed;

said moving means comprising a stationary cylinder having a piston movable therein, said piston coupled to said transfer plate and effective for moving the same vertically up and down; and

said rotating means comprising a stationary rotating driving device having a driving shaft coupled to said piston and effective to rotate said piston to thereby rotate said transfer plate, said driving shaft being flexibly coupled to said piston in a manner which maintains a driving connection with said piston in all vertical positions of said piston.

2. The rotary molding machine of claim 1, further comprising a respective member receiving hole in each of said lip molds for enabling insertion through said receiving holes of means for interacting with said stations.

3. The rotary molding machine of claim 2, wherein said transfer plate is circular and said moving and rotating means are disposed centrally relative to said circular transfer plate and further wherein said lip molds are located on said circular transfer plate in a manner which approximately equalizes the distribution of weight on said transfer plate relative to the center thereof.

4. The molding machine of claim 2, wherein said driving shaft is inserted into

AUSTRALIAN PATENT OFFICE

said piston and connected thereto by a spline.

5. The rotary molding machine of claim 2, wherein said driving shaft comprises at least first and second members which are telescopically disposed relative to one another.

6. The rotary molding machine of claim 2, wherein said rotating driving device comprises a hydraulically operated oscillation motor, and said cylinder comprises a hydraulic cylinder.

7. The rotary molding machine of claim 2, wherein said rotating driving device comprises a servomotor.

8. The rotary molding machine of claim 2, wherein said injection molding station comprises an injection mold and said orientation blow molding station comprises a blow molding mold.

9. The rotary molding machine of claim 2, wherein said injection molding station comprises an injection mold and said orientation blow molding station comprises a cooling mold.

10. The rotary molding machine of claim 2, further comprising a support body supported stationarily and horizontally above said machine bed and above said transfer plate, said moving and rotating means being secured at said support body.

11. The molding machine of claim 10, wherein said driving shaft is inserted into said piston and connected thereto by a spline.

12. The rotary molding machine of claim 10, wherein said driving shaft comprises at least first and second members which are telescopically disposed relative to one another.

13. The rotary molding machine of claim 10, wherein said rotating driving device comprises a hydraulically operated oscillation motor, and said cylinder comprises a hydraulic cylinder.

14. The rotary molding machine of claim 10, wherein said rotating driving device comprises a servomotor.

15. The rotary molding machine of claim 10, wherein said injection molding station comprises an injection mold and said orientation blow molding station

AUSTRALIAN PATENT OFFICE

comprises a blow molding mold.

16. The rotary molding machine of claim 10, wherein said injection molding station comprises an injection mold and said orientation blow molding station comprises a cooling mold.

17. The rotary molding machine of claim 2, further comprising a base plate supported stationarily and horizontally on said machine bed below said transfer plate, said cylinder of said moving means and said rotating driving device of said rotating means being stationarily affixed relative to said base plate.

18. The molding machine of claim 17, wherein said driving shaft is inserted into said piston and connected thereto by a spline.

19. The rotary molding machine of claim 17, wherein said driving shaft comprises at least first and second members which are telescopically disposed relative to one another.

20. The rotary molding machine of claim 17, wherein said rotating driving device comprises a hydraulically operated oscillation motor, and said cylinder comprises a hydraulic cylinder.

21. The rotary molding machine of claim 17, wherein said rotating driving device comprises a servomotor.

22. The rotary molding machine of claim 17, wherein said injection molding station comprises an injection mold and said orientation blow molding station comprises a blow molding mold.

23. The rotary molding machine of claim 17, wherein said injection molding station comprises an injection mold and said orientation blow molding station comprises a cooling mold.

24. A rotary molding machine substantially as herein described with reference to the accompanying drawings.

Dated this 31st day of January, 1991.

DAVIES & COLLISON

Patent Attorneys for

NISSEI ASB MACHINE CO., LTD.

AUSTRALIAN PATENT OFFICE

第 1 図

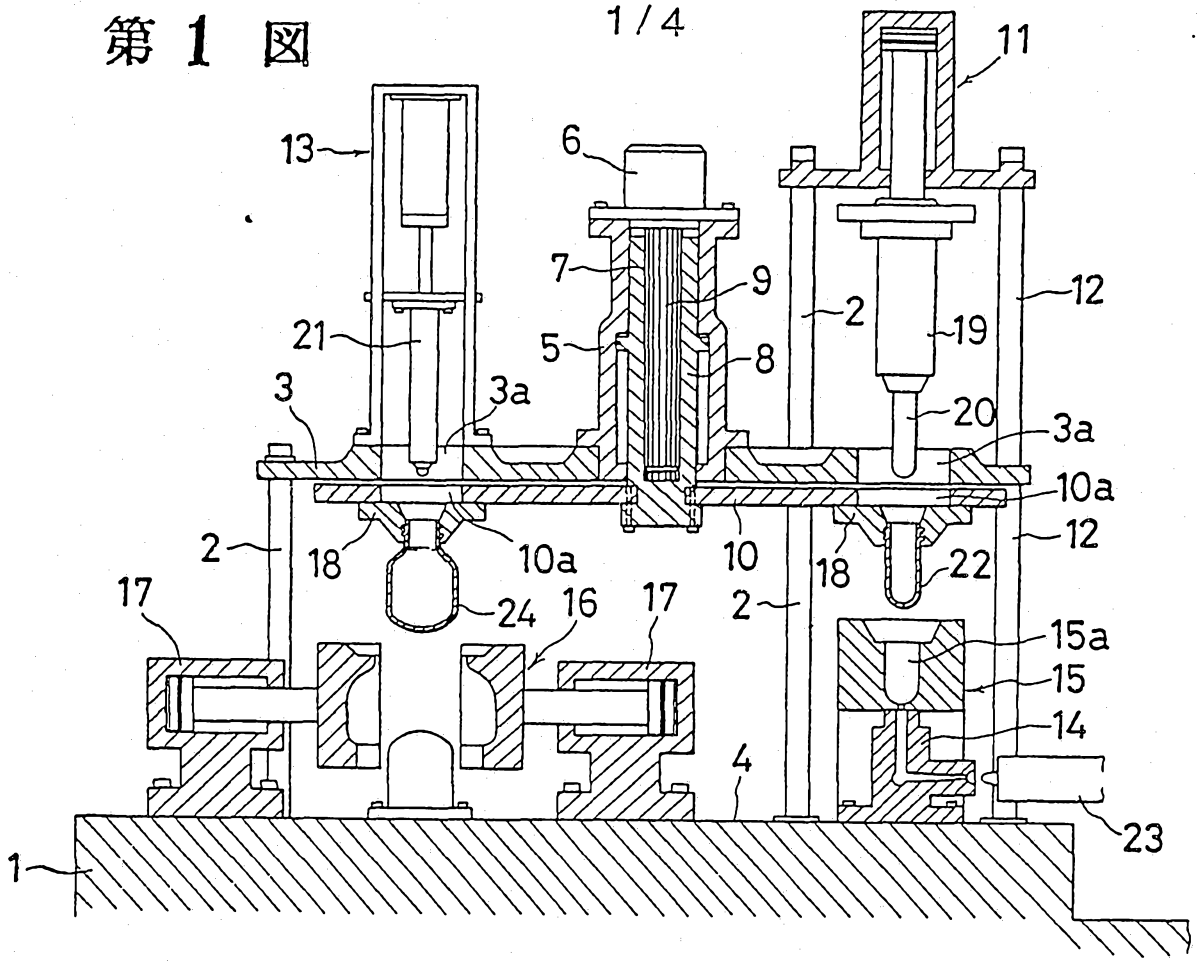
11
13
6
7
9
12
2
19
21
5
8
3
3a
20
3a
10a
2
18
10a
10
18
22
12
17
24
16
17
2
15a
15
14
4
23
1

第 3 図

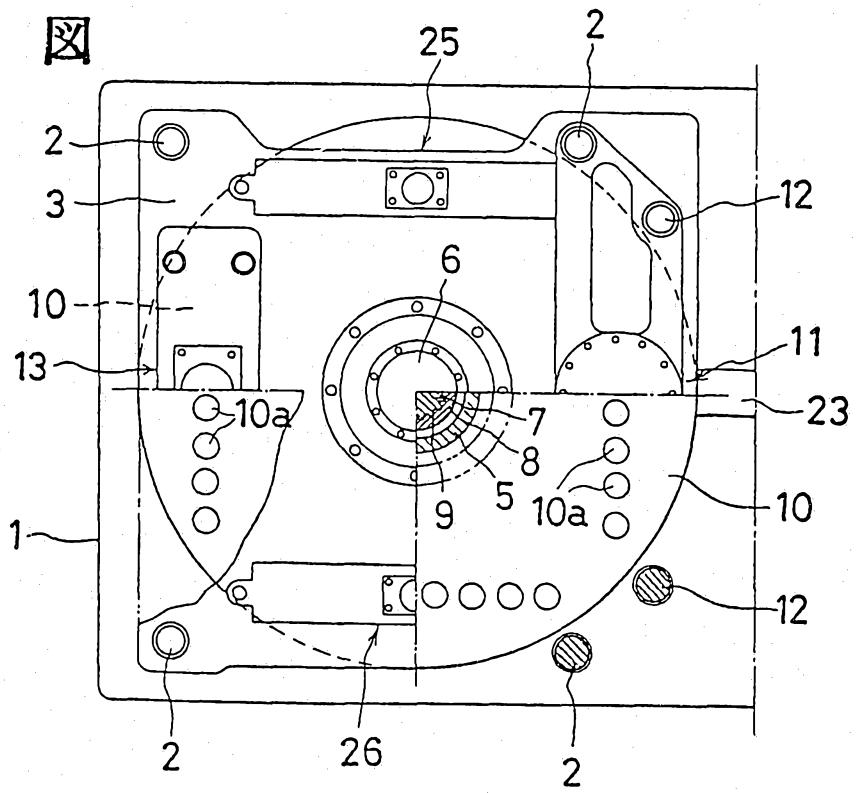
25
2
2
12
3
6
10
11
13
23
10a
7
8
5
10a
9
10
1
12
2
26
2

第 2 図

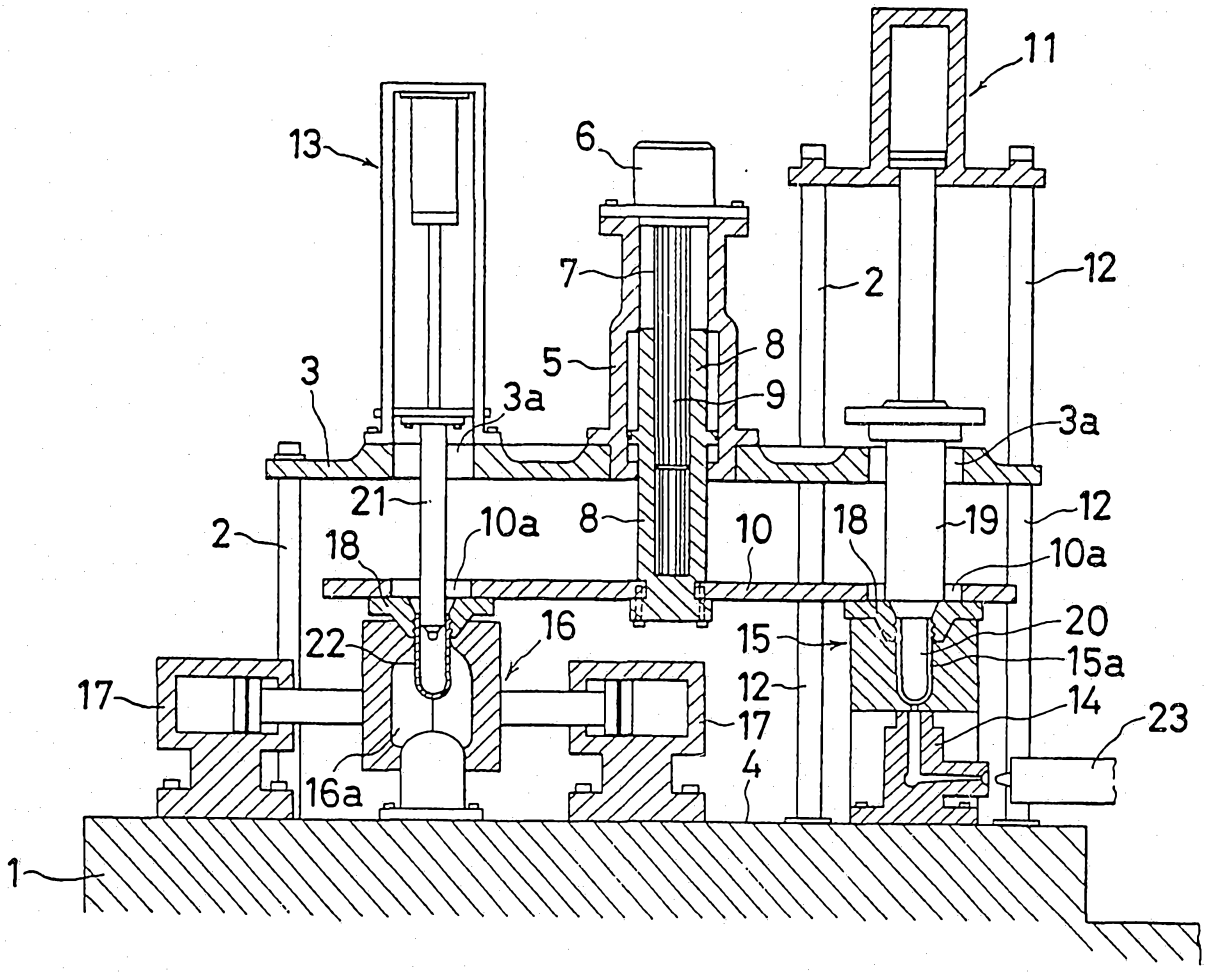
11
13
6
7
2
12
5
8
3
9
3a
3a
21
10a
8
10
18
19
12
2
18
10a
16
22
15
20
15a
17
12
14
23
17
4
16a
1

第 4 図

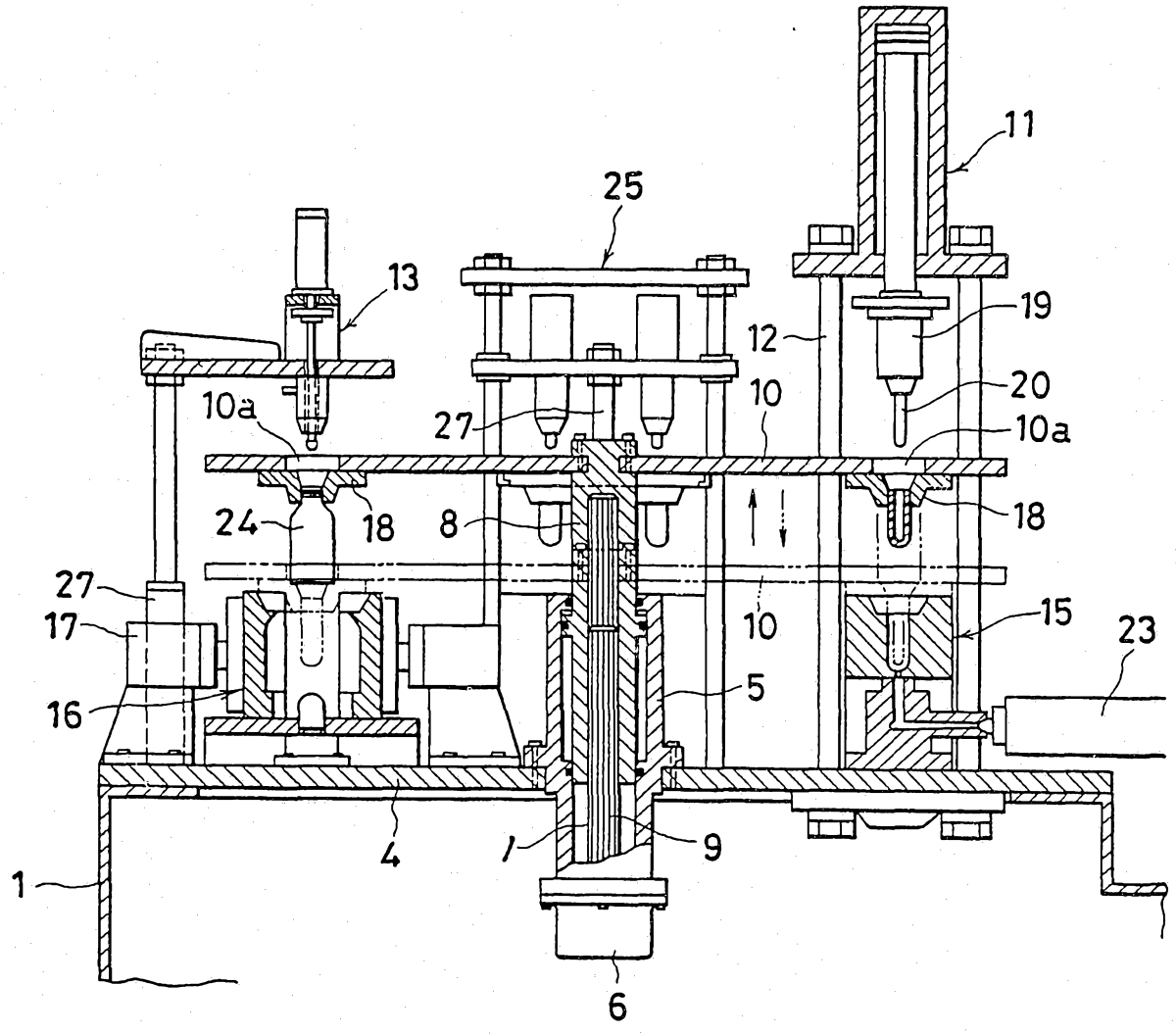

第 5 図

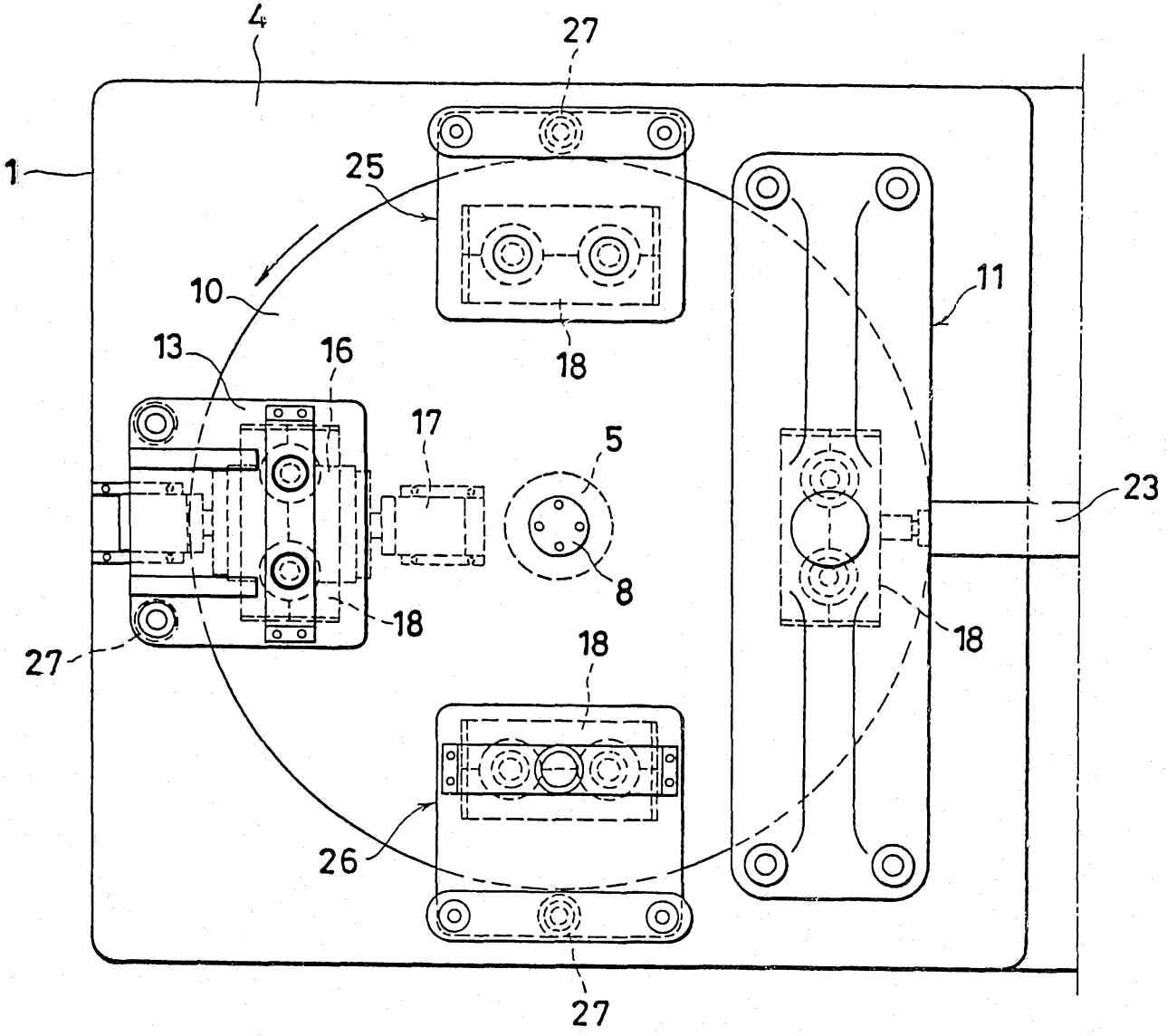

INTERNATIONAL SEARCH REPORT

International Application No PCT/JP88/00712

I. CLASSIFICATION OF SUBJECT MATTER (If several classification symbols apply, indicate all) [6]

According to International Patent Classification (IPC) or to both National Classification and IPC

Int.Cl[4] B29C49/36, 49/06, 49/08, 45/06
// B29L22:00

II. FIELDS SEARCHED

Minimum Documentation Searched [7]

Classification System	Classification Symbols
IPC	B29C49/30-36, 49/06-12, 45/04-13

Documentation Searched other than Minimum Documentation to the Extent that such Documents are Included in the Fields Searched [8]

Jitsuyo Shinan Koho 1955 - 1988
Kokai Jitsuyo Shinan Koho 1971 - 1988

III. DOCUMENTS CONSIDERED TO BE RELEVANT [9]

Category *	Citation of Document, [11] with indication, where appropriate, of the relevant passages [12]	Relevant to Claim No. [13]
A	JP, A, 50-139163 (Owens-Illinois, Inc.) 6 November 1975 (06. 11. 75) Fig. 6-7 & FR, A, 2267874 & US, A, 4004872	1-7
A	JP, A, 47-6240 (Maschinenfabrik und Giesserei Netstal A.G.) 7 April 1972 (07. 04. 72) Fig. 1-2 & DE, A, 2142881 & CH, A, 520591	1-7
A	JP, A, 57-128519 (Aoki Katashi) 10 August 1982 (10. 08. 82) Figs. 1 to 2 & DE, A, 3203662 & US, A, 4457689	1-6
A	JP, A, 60-244518 (Aoki Katashi) 4 December 1985 (04. 12. 85) Figs. 9 to 10 & EP, A, 162424 & US, A, 4648824	1-7

* Special categories of cited documents: [10]

"A" document defining the general state of the art which is not considered to be of particular relevance

"E" earlier document but published on or after the international filing date

"L" document which may throw doubts on priority claim(s) or which is cited to establish the publication date of another citation or other special reason (as specified)

"O" document referring to an oral disclosure, use, exhibition or other means

"P" document published prior to the international filing date but later than the priority date claimed

"T" later document published after the international filing date or priority date and not in conflict with the application but cited to understand the principle or theory underlying the invention

"X" document of particular relevance; the claimed invention cannot be considered novel or cannot be considered to involve an inventive step

"Y" document of particular relevance; the claimed invention cannot be considered to involve an inventive step when the document is combined with one or more other such documents, such combination being obvious to a person skilled in the art

"&" document member of the same patent family

IV. CERTIFICATION

Date of the Actual Completion of the International Search	Date of Mailing of this International Search Report
October 4, 1988 (04. 10. 88)	October 17, 1988 (17. 10. 88)
International Searching Authority	**Signature of Authorized Officer**
Japanese Patent Office	

FURTHER INFORMATION CONTINUED FROM THE SECOND SHEET

A	JP, A, 61-195766 (Ube Industries, Ltd.) 30 August 1986 (30. 08. 86) Figs. 1 to 2 & GB, A, 2171626 & DE, A, 3606066 & US, A, 4754801	7

V. ☐ OBSERVATIONS WHERE CERTAIN CLAIMS WERE FOUND UNSEARCHABLE [10]

This international search report has not been established in respect of certain claims under Article 17(2) (a) for the following reasons:

1. ☐ Claim numbers....., because they relate to subject matter [12] not required to be searched by this Authority, namely:

2. ☐ Claim numbers....., because they relate to parts of the international application that do not comply with the prescribed requirements to such an extent that no meaningful international search can be carried out [13], specifically:

VI. ☐ OBSERVATIONS WHERE UNITY OF INVENTION IS LACKING [11]

This International Searching Authority found multiple inventions in this international application as follows:

1. ☐ As all required additional search fees were timely paid by the applicant, this international search report covers all searchable claims of the international application.

2. ☐ As only some of the required additional search fees were timely paid by the applicant, this international search report covers only those claims of the international application for which fees were paid, specifically claims:

3. ☐ No required additional search fees were timely paid by the applicant. Consequently, this international search report is restricted to the invention first mentioned in the claims; it is covered by claim numbers:

4. ☐ As all searchable claims could be searched without effort justifying an additional fee, the International Searching Authority did not invite payment of any additional fee.

Remark on Protest

☐ The additional search fees were accompanied by applicant's protest.

☐ No protest accompanied the payment of additional search fees.

国　際　調　査　報　告

国際出願番号PCT/JP88/00712

Ⅰ．発明の属する分野の分類

国際特許分類（IPC）　Int. Cl⁴
B29C49/36，49/06，49/08，45/06
// B29L22:00

Ⅱ．国際調査を行った分野

調　査　を　行　っ　た　最　小　限　資　料

分類体系	分類記号
IPC	B29C49/30-36，49/06-12，45/04-13

最小限資料以外の資料で調査を行ったもの

日本国実用新案公報　　1955-1988年
日本国公開実用新案公報　　1971-1988年

Ⅲ．関連する技術に関する文献

引用文献のカテゴリー※	引用文献名　及び一部の箇所が関連するときは、その関連する箇所の表示	請求の範囲の番号
A	JP，A，50-139163 （オーエンスーイリノイ・インコーポレーテッド） 6．11月．1975（06．11．75） Fig 6-7&FR，A，2267874&US，A，4004872	1－7
A	JP，A，47-6240 （マシーネンファブリーク・ウント・ジーゼライ・ネットスタル・アーゲー） 7．4月．1972（07．04．72） Fig1-2&DE，A，2142881&CH，A，520591	1－7
A	JP，A，57-128519（青木固） 10．8月．1982（10．08．82） 第1－2図&DE，A，3203662&US，A，4457689	1－6
A	JP，A，60-244518（青木固） 4．12月．1985（04．12．85）	1－7

※引用文献のカテゴリー
「A」特に関連のある文献ではなく、一般的技術水準を示すもの
「E」先行文献ではあるが、国際出願日以後に公表されたもの
「L」優先権主張に疑義を提起する文献又は他の文献の発行日若しくは他の特別な理由を確立するために引用する文献（理由を付す）
「O」口頭による開示、使用、展示等に言及する文献
「P」国際出願日前で、かつ優先権の主張の基礎となる出願の日の後に公表された文献
「T」国際出願日又は優先日の後に公表された文献であって出願と矛盾するものではなく、発明の原理又は理論の理解のために引用するもの
「X」特に関連のある文献であって、当該文献のみで発明の新規性又は進歩性がないと考えられるもの
「Y」特に関連のある文献であって、当該文献と他の1以上の文献との、当業者にとって自明である組合せによって進歩性がないと考えられるもの
「&」同一パテントファミリーの文献

Ⅳ．認　　証

国際調査を完了した日	国際調査報告の発送日
04．10．88	17.10.88
国際調査機関	権限のある職員
日本国特許庁（ISA/JP）	4F 7365 特許庁審査官　野村康秀 ㊞

様式PCT／ISA／210（第2ページ）（1981年10月）

第2ページから続く情報

	（Ⅲ欄の続き） 第9－10図&EP，A，162424&US，A，4648824 JP，A，61－195766（宇部興産株式会社） 30．8月．1986（30．08．86） 第1－2図&GB，A，2171626&DE，A，3606066 &US，A，4754801	
A		7

V．☐ 一部の請求の範囲について国際調査を行わないときの意見

次の請求の範囲については特許協力条約に基づく国際出願等に関する法律第8条第3項の規定によりこの国際調査報告を作成しない。その理由は、次のとおりである。

1．☐ 請求の範囲＿＿＿＿＿は、国際調査をすることを要しない事項を内容とするものである。

2．☐ 請求の範囲＿＿＿＿＿は、有効な国際調査をすることができる程度にまで所定の要件を満たしていない国際出願の部分に係るものである。

3．☐ 請求の範囲＿＿＿＿＿は、従属請求の範囲でありかつPCT規則6.4(a)第2文の規定に従って起草されていない。

Ⅵ．☐ 発明の単一性の要件を満たしていないときの意見

次に述べるようにこの国際出願には二以上の発明が含まれている。

1．☐ 追加して納付すべき手数料が指定した期間内に納付されたので、この国際調査報告は、国際出願のすべての調査可能な請求の範囲について作成した。

2．☐ 追加して納付すべき手数料が指定した期間内に一部分しか納付されなかったので、この国際調査報告は、手数料の納付があった発明に係る次の請求の範囲について作成した。
請求の範囲＿＿＿＿＿

3．☐ 追加して納付すべき手数料が指定した期間内に納付されなかったので、この国際調査報告は、請求の範囲に最初に記載された発明に係る次の請求の範囲について作成した。
請求の範囲＿＿＿＿＿

4．☐ 追加して納付すべき手数料を要求するまでもなく、すべての調査可能な請求の範囲について調査することができたので、追加して納付すべき手数料の納付を命じなかった。

追加手数料異議の申立てに関する注意

☐ 追加して納付すべき手数料の納付と同時に、追加手数料異議の申立てがされた。

☐ 追加して納付すべき手数料の納付に際し、追加手数料異議の申立てがされなかった。