June 18, 1940. E. E. ANDERSON 2,205,005

MACHINE FOR FORMING THE BOTTOMS OF BAGS

Filed May 20, 1939 2 Sheets-Sheet 1

Fig. 1

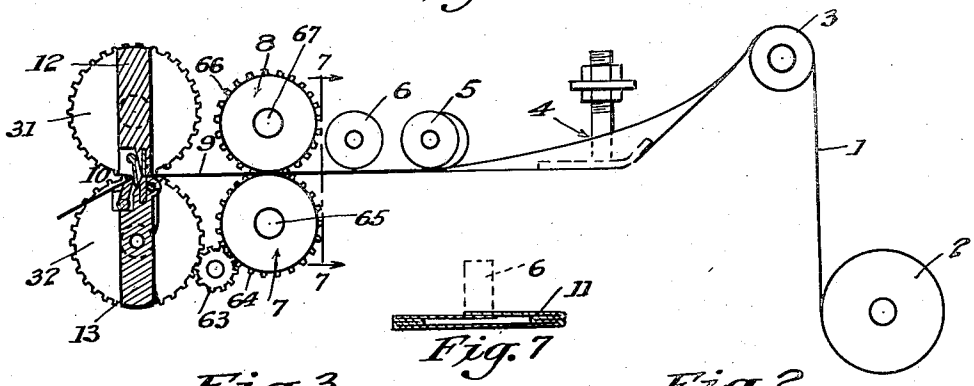

Fig. 7

Fig. 3

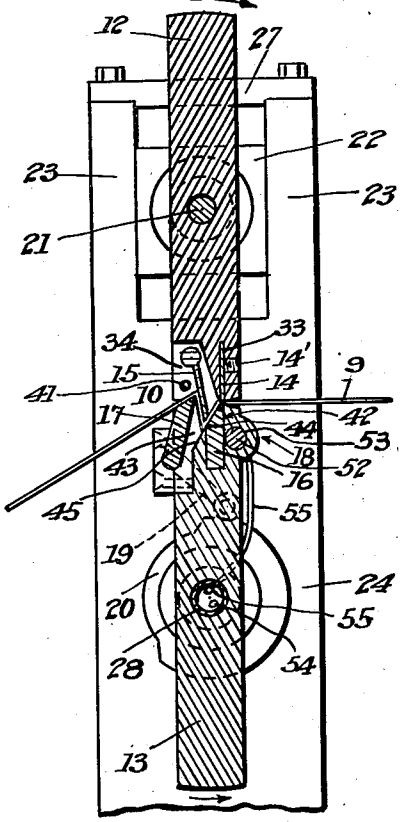

Fig. 2

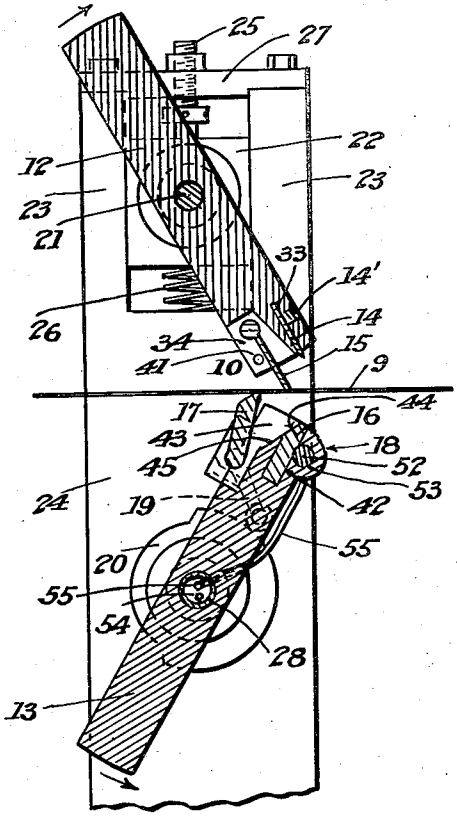

Fig. 9

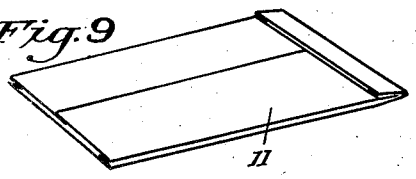

INVENTOR:
Edward E. Anderson,
BY Alan Franklin
ATTORNEY.

June 18, 1940. E. E. ANDERSON 2,205,005

MACHINE FOR FORMING THE BOTTOMS OF BAGS

Filed May 20, 1939 2 Sheets-Sheet 2

Fig. 4

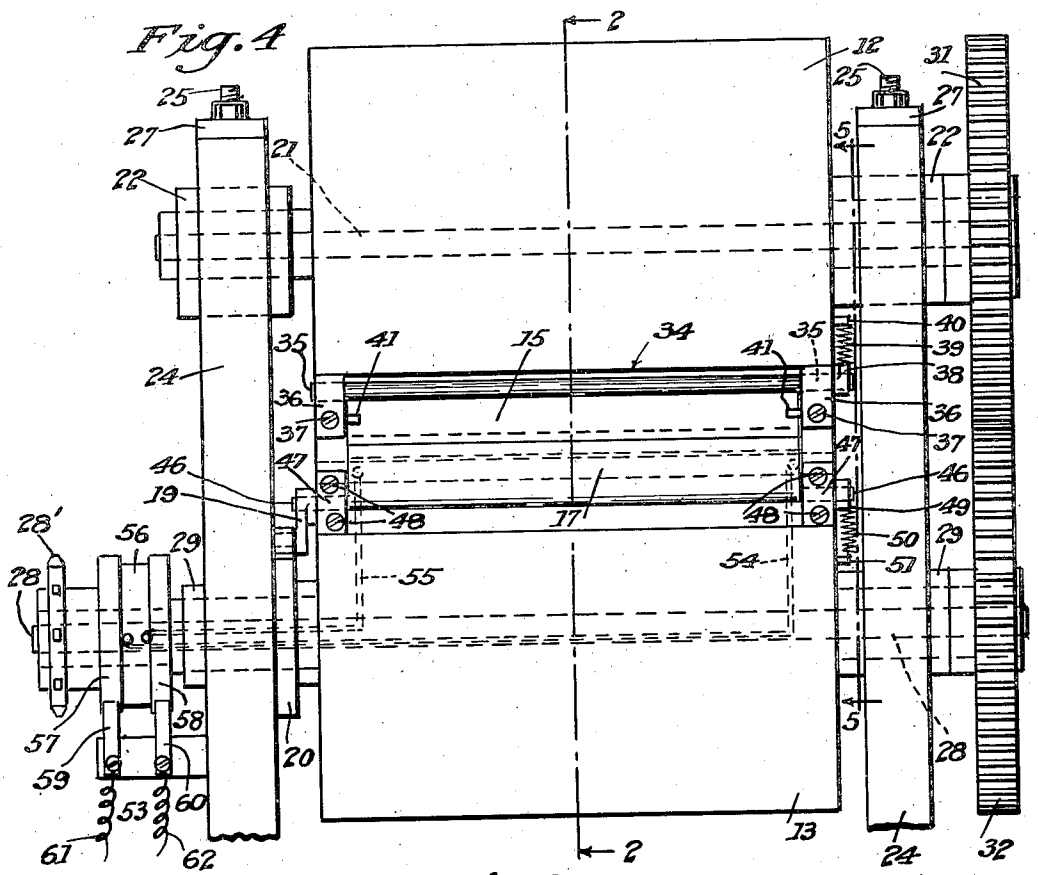

Fig. 5

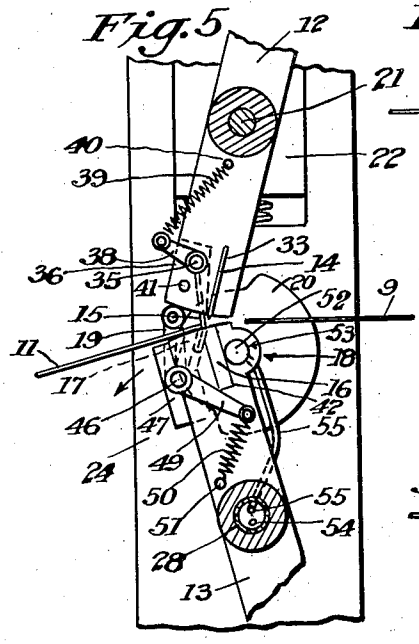

Fig. 6

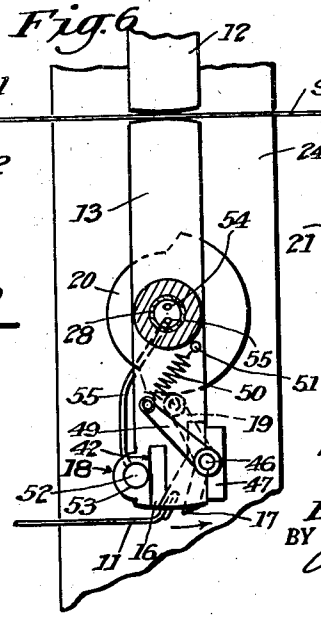

Fig. 8

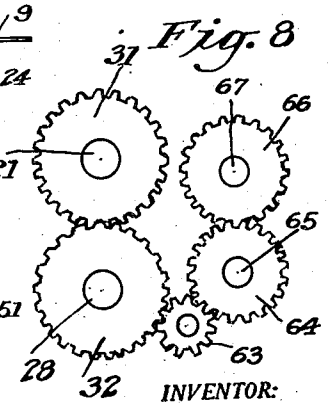

INVENTOR:
Edward E. Anderson,
BY
Alan Franklin
ATTORNEY.

Patented June 18, 1940 2,205,005

UNITED STATES PATENT OFFICE

2,205,005

MACHINE FOR FORMING THE BOTTOMS OF BAGS

Edward E. Anderson, Loma Linda, Calif.

Application May 20, 1939, Serial No. 274,769

4 Claims. (Cl. 93—26)

This invention relates to machines for making bags and particularly to bags of cellulose sheet material.

One of the objects of the invention is to provide a bag making machine for folding and sealing the bottom of a bag in an improved manner.

Another object is to provide an improved bag making machine by means of which bags of minimum length may be made.

With the above and other objects in view, the invention consists in the novel and useful provision, formation, construction, association, and relative arrangement of parts, members and features, all as shown in a certain embodiment in the annexed drawings, forming a part of this specification in which the invention is described generally, and more particularly pointed out in the claims.

In the drawings,

Fig. 1 is a diagrammatic view of a bag-making machine embodying my invention.

Fig. 2 is a transverse vertical section, taken on line 2—2 of Fig. 4, of my mechanism for cutting an elongated sheet of tubular formed material into bag lengths and folding and sealing the rear ends of said lengths to form the bottoms of bags, the parts of my said mechanism being shown in position receiving said elongated sheet of tubular formed material.

Fig. 3 is a view like Fig. 2, but showing the parts of my mechanism in their position cutting off a bag length of the sheet of tubular formed material and partly folding the rear or bottom end of said bag length to form a bag.

Fig. 4 is a rear view of my mechanism for forming and sealing the bottoms of bags.

Fig. 5 is a view like Fig. 2, but showing the parts of my mechanism in position completely folding and sealing the bottom of the bag.

Fig. 6 is a view like Fig. 2, but showing the parts of my mechanism in position releasing and discharging the bag after its bottom is completely formed and sealed by my mechanism.

Fig. 7 is a cross section of the tubular folded sheet for making the bags, taken on line 7—7 of Fig. 1.

Fig. 8 is a view of the drive gearing of my invention.

Fig. 9 is a perspective of a bag with its bottom folded by my invention.

Referring more particularly to the drawings, in which corresponding parts are designated by the same reference numerals in all of the figures, 1 designates an elongated sheet of cellulose paper, which is unwound from a roll 2 and extends first over a guide roller 3, then under a folder 4, which folds said sheet longitudinally in tubular form, then in tubular guide rollers 5 and 6, and then between a pair of feed rollers 7 and 8 of a conventional bag making machine.

The feed rollers 7 and 8 feed the sheet 1 in tubular form, as indicated at 9, into my cutting, folding and sealing mechanism, designated generally 10, for forming and sealing the bottoms of bags indicated 11 in Figs. 5 and 6 of the drawings. My cutting, folding and sealing mechanism 10 includes generally a pair of cooperating rotary carrier bars 12 and 13, a knife 14 and a tucker 15 mounted in carrier bar 12, an anvil 16, a folder 17, and an electric heater 18 mounted on carrier bar 13, and a cam-engaging arm 19 and a cam 20 engaged by said arm for swinging said folder out of folding position to release the bag 11, when its bottom is formed and sealed, so that the bag will drop from my cutting, folding and sealing mechanism 10, as shown in Fig. 6.

The carrier bar 12 is secured on a shaft 21, extending longitudinally and centrally therethrough, and the projecting ends of said shaft are journaled in adjustable bearings 22 mounted in vertical guides 23 in the upper ends of a pair of standards 24 respectively. Said bearings 22 rest upon adjusting screws 25 threaded in the upper ends of the standards 24, and springs 26 are interposed between the upper ends of said bearings and plates 27 bolted to the upper ends of the guides 23 of said standards respectively. The bearings 22 are moved upwardly by the screws 25 when turned in one direction, and when said screws are turned in the other direction and lowered the springs 26 ensure downward movement of said bearings against the upper ends of said screws, whereby the carrier bar 12 is adjusted upwardly or downwardly with relation to the carrier bar 13. The carrier bar 13 is secured on a shaft 28 extending longitudinally and centrally therethrough, and the projecting ends of said shaft are journaled in fixed bearings 29 in the lower portions of the standards 24 respectively. Intermeshing gears 31 and 32 are secured on the carrier shafts 21 and 28 respectively, which cause the carrier bars 12 and 13 to rotate in opposite directions, when power is applied to a pulley 28' the shaft 28 to rotate said shaft counterclockwise, as viewed in Figs. 1 to 3 inclusive and Figs. 5 and 6.

In one of the longitudinal edges of the rotary carrier bar 12 is formed a slot 33, and a recess 34, in which slot the knife 14 is tightly fitted and is secured by a set screw 14' in said carrier bar

with its outer cutting edge extending slightly beyond said edge of said carrier bar, while the tucker 15 in the form of a blade is pivotally mounted in said recess by means of trunnions 35 extending from its ends at its inner edge and turnable in bearings 36 secured to the carrier bar 12 in the ends of said recess 34 by screws 37. An arm 38 is secured to the outer end of one of said trunnions 35 and is connected to one end of a spring 39, which is connected at its other end to a pin 40 projecting from one end of the carrier bar 12, whereby the tucker 15 is swung outwardly on its trunnions 35 in the recess 34 against pins 41 projecting from the inner sides of the bearings 36, in the manner and for the purpose hereinafter more fully described.

In one of the longitudinal edges of the carrier bar 13 is formed a slot 42 and a recess 43, in which slot is secured the anvil 16 with its outer edge flush with said edge of said carrier bar, said anvil being formed with a beveled surface 44 at one side extending from its outer edge flush with the inner inclined wall 45 of said recess 43, in the inner end of which recess the folder 17 is fulcrumed to swing on trunnions 46, turnable in bearings 47, which trunnions extend from the ends of said folder at its inner edge, and which bearings are secured to one side of the carrier bar 13 by screws 48. An arm 49 is secured to the outer end of one of trunnions 46 and is connected to one end of a spring 50 which is connected at its other end to a pin 51 on one end of said carrier bar 13 whereby the folder 17 is swung inwardly toward the inner inclined wall 45 of the recess 42. The cam engaging arm 19 is secured on the outer end of the other trunnion 46 of the folder 17 and the cam 20 is secured to the inner side of the adjacent standard 24.

The electric heater 18 comprises a gray rod 52, fitted in a bore 53 in the carrier bar 13, with the inner side of said rod extending against the adjacent side of the anvil 16 from one end of said anvil to the other, which rod 52 is included in an electrical circuit 53, of which the leads 54 and 55 are connected at one end to the ends respectively of said rod and extend therefrom through the tubular shaft 28 of the carrier bar 13 to a commutator 56 secured on one end of said shaft, and said leads 54 and 55 are connected respectively at their other ends to the commutator ring contacts 57 and 58, which contacts are wiped by brushes 59 and 60 respectively, and to which brushes are connected leads 61 and 62 respectively, extending from a generator (not shown).

The gear 32 on the carrier-bar shaft 28 meshes an idler 63, which in turn meshes with a gear 64 on the shaft 65 of the feed roller 7, whereby said feed roller is driven from the carrier-bar shaft 28, and the feed roller 8 is driven from said gear 64 by a gear 66 in mesh with said gear 64 and secured on the shaft 67 of said feed roller 8.

The operation, uses and advantages of my invention are as follows:

Power is applied to the sprocket 28' and said sprocket, carrier shaft 28 and carrier bar 13, and gear 32 are rotated counterclockwise, as viewed in Fig. 1, and the gear 31, meshing with said gear 32, is rotated clockwise, which correspondingly rotates the carrier bar-shaft 21 and carrier bar 12, while the feed roller 7 is rotated counterclockwise by the gear 32, through idler 63, gear 64 and roller shaft 65, and the feed roller 8 is rotated clockwise by the gear 64 through intermeshing gear 66 and roller shaft 67, whereupon the sheet of cellulose material 1 is drawn by said feed rollers 7 and 8 from the supply roll 2, over the guide roller 3, under the folder 4, guide rollers 5, and sealing roller 6, and between said feed rollers 7 and 8, and said sheet, folded in tubular form by folder 4 and its overlapping folded edges sealed in such form by sealing roller 6 as indicated at 9, is fed by said feed rollers 7 and 8 between the carrier bars 12 and 13 as shown in Figs. 1 and 2. When the sheet 1 in tubular form, as indicated at 9, is fed between the carrier bars 12 and 13 the length of the bag 11 to be folded and sealed at the bottom of my invention, the edges of said carrier bars, in which the cutting, folding and sealing elements of my invention are mounted, are brought together by the rotation of said carrier bars 12 and 13, whereupon the bottom end portion of the tubular bag length of the sheet 1, resting upon the outer end of the tucker 15 and folded over the outer end of said folder 17 and the outer end of the anvil 16, between said folder and said anvil, and the outer edge of the knife 18 is brought against the rear end of the bag length of the tubular formed sheet 1 over the outer end of the anvil 16 and said bag length is cut by said knife from the sheet 1, as shown in Fig. 3. As the carrier bars 12 and 13 are further rotated, as above described, the cam-engaging arm 19 rides off the high part onto the low part of cam 20, whereupon the folder 17, through its arm 49, is swung inwardly by the spring 50 and folds the bottom of the bag 11 completely upon itself between the folder and the inclined surface 44 of the anvil 16 and inclined wall 45 of the recess 43, during which folding operation the folder 17 swings the tucker 15 backwardly and upwardly against the tension of its spring 39, and together with the rotation of the carrier bars 12 and 13 withdraws said tucker from the bottom end of the bag while being completely folded, whereupon the spring 39 swings the tucker 15 back to its initial position against the pins 41 (Fig. 2), and said folded bottom of the bag is gripped together between said folder and said anvil surface and inclined recess wall, and while so gripped together the folded bottom of the bag 11 is heated by the heater 18, as shown in Fig. 5. As the carrier bars 12 and 13 are further rotated the completely folded and gripped bottom of the bag 11 is heated by the heater 18 until the edge of the bar 13, in which the folded bottom of the bag 11 is gripped, reaches its lowermost position, in which position of said carrier bar the folded bottom of the bag is heated sufficiently to cause the cellulose material of the bag to seal said folded bottom of the bag, whereupon the cam-engaging arm 19 again engages the high part of the cam 20 and swings the folder 17 outwardly away from the folded and sealed bottom of the bag 11, releasing the folded and sealed bottom of the bag and allowing the completely formed bag 11 to drop from my bottom forming machine, as shown in Fig. 6.

I claim:

1. A bag machine as described, including means for feeding a sheet of bag making material in tubular form a suitable length to form a bag, means for cutting said bag length from the fed end portion of said tubular-formed sheet, means for folding the rear cut end of said bag length to form the bottom of the bag, means for sealing said folded bottom end of the bag, and means for releasing said folding means from the bottom of the bag for delivering the completely formed bag.

2. A bag making machine including means for

feeding a sheet of bag making material in tubular form a suitable length to form a bag, means for folding one end of said bag length of said tubular formed sheet to form the bottom of the bag, means for cutting the bottom end of said bag length from said tubular-formed sheet when said bottom of the bag is partly folded, means for sealing said bottom of the bag when said bottom is completely folded, and means for releasing said folding means from the bottom of the bag for delivering the bag when said bottom is completely folded and sealed.

3. In a bag making machine, a pair of rotary carrier bars, means for feeding a sheet of bag making material, folded in tubular form, a suitable length to form a bag between the meeting edges of said carrier bars as said bars are rotated, an anvil and a folder mounted in one edge of one of said carrier bars, and a knife and a tucker mounted in one edge of said other carrier bar, so that when said edges of said carrier bars are rotated together, said tucker will tuck the rearend portion of said bag length of bag material between said anvil and said folder and partly fold said rear end, and said knife will cut the rear end of said bag length from said sheet of bag making material, means for swinging said folder inwardly, as said carrier bars continue to rotate, for completely folding said rear end of said bag length of bag making material and for removing said tucker from said folded end of said bag length, means for sealing the completely folded bottom end of the bag, and means for releasing said folder from the completely folded bottom end of the bag, as said carrier bars continue to rotate, to deliver the complete bag from said carrier bar on which said folder is mounted.

4. A bag making machine as claimed in claim 3 in which the sealing means is mounted on the carrier bar on which the anvil and the folder are mounted.

EDWARD E. ANDERSON.