Aug. 7, 1945. L. A. M. PHELAN 2,381,617

FREEZER CHAMBER AND EVAPORATOR

Filed Oct. 8, 1941

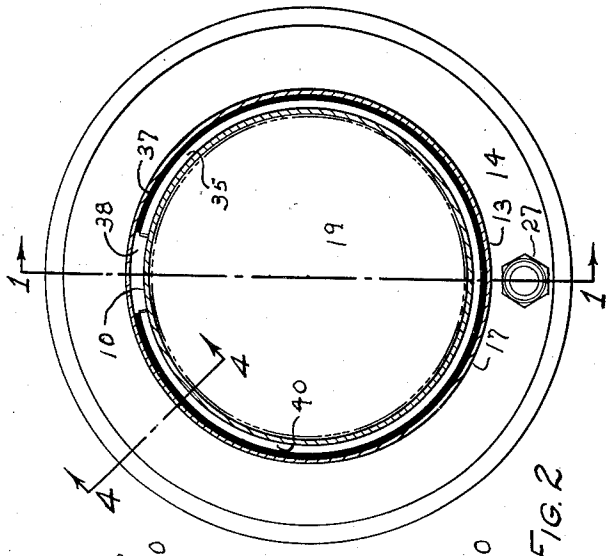

FIG. 2

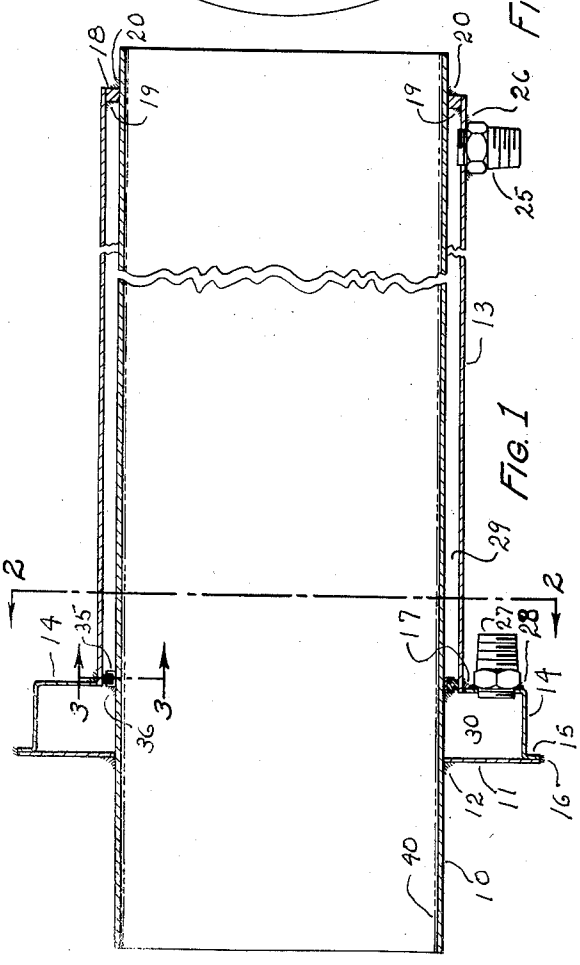

FIG. 1

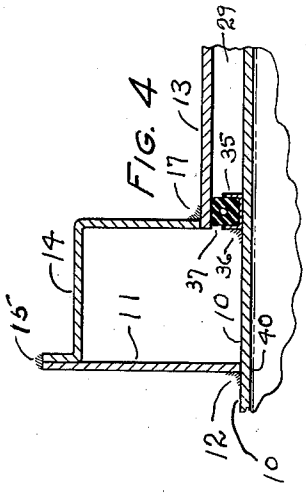

FIG. 4

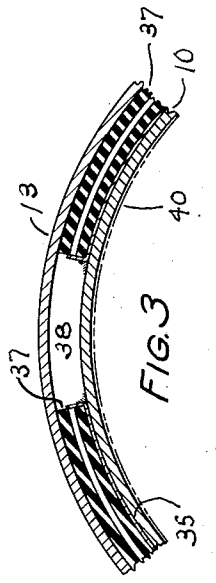

FIG. 3

INVENTOR.
LOUIS A. M. PHELAN
BY A. S. Krob
ATTORNEY

Patented Aug. 7, 1945 2,381,617

UNITED STATES PATENT OFFICE

2,381,617

FREEZER CHAMBER AND EVAPORATOR

Louis A. M. Phelan, Rockton, Ill.

Application October 8, 1941, Serial No. 414,152

3 Claims. (Cl. 62—126)

The present invention relates to ice cream freezer chambers particularly adapted for a continuous process.

An object of my invention is to provide a freezer chamber which is light, easily manufactured at low cost and durable and having means whereby the material being frozen may be scraped from the inner surface of the chamber by means of blades which are mounted on the mixing rotor without danger of abrasion or perceptible wear on the walls of the chamber.

A further object of my invention is to provide a compact structure which may be largely or completely assembled and welded together before the inner surface is plated so the plating is not affected by the heat necessary for welding.

A still further object of my invention is to provide a multiple series path for the refrigerant which will increase the efficiency of the device.

A further object of my invention is to provide a chamber and refrigerant passageway which are efficient and wherein unequal expansion and contraction are provided for.

To these and other useful ends, my invention resides in parts, combinations of parts, or their equivalents, and mode of operation, as hereinafter set forth and claimed and shown in the accompanying drawing in which:

Fig. 1 is a longitudinal fractional sectional view of my complete device taken on line 1—1 of Figure 2.

Fig. 2 is a transverse sectional view taken on line 2—2 of Figure 1.

Fig. 3 is a fractional sectional view taken on line 3—3 of Figure 1.

Fig. 4 is a longitudinal fractional sectional view taken on line 4—4 of Figure 2.

As thus illustrated, the mixing chamber of my device is designated by reference numeral 10. In devices of the class, this chamber may be made four feet more or less in length and the inside diameter of the chamber may be six inches, more or less, depending upon the design of the mixing rotor.

I provide an annular disc 11 which is welded to the chamber as at 12 preferably a short distance from the end thereof. I provide an outer annular chamber 13 which is about the length of chamber 10 and secured to one end of this chamber by means of an annular ring 18 which is welded to members 13 and 10 as at 19 and 20. This ring is preferably positioned a short distance from the other end of the inner chamber.

I provide an annular ring 14 formed from an L-iron and having preferably on its outer edge a narrow outwardly extending flange 15 which contacts member 11 and is welded thereto as at 16, the inner flange of member 14 being welded to the end of outer chamber 13 as at 17.

A fitting 25 is provided which is welded as at 26 to member 13 and is positioned preferably near the end thereof. I provide another fitting 27 which is secured to member 14 preferably as illustrated and being welded thereto as at 28. It will be seen that I have provided a narrow annular chamber 29 for the greater part of the length of member 10 and a relatively wide and short annular chamber 30. These annular chambers are separated by means of a partition which is provided with a narrow opening for the passage of the refrigerant from one annular chamber to the other.

It will be understood that fittings 25 and 27 may answer as inlet and outlet openings respectively or vice versa.

By referring to Figures 3 and 4, it will be noted that the partition referred to above comprises preferably a channel iron 35, the flanges extending preferably outwardly and the body of the chamber being fitted around member 10 and welded thereto as at 36. The outer edges of the flanges of channel 35 are positioned a distance from member 13 and a synthetic rubber band 37 is positioned in this channel of a size which will be considerably compressed when member 13 is moved into position over member 10.

Member 35 is positioned as shown and has a length so a port as at 38 is provided for the passage of the refrigerant between chambers 29 and 30, port 38 being positioned on the opposite side of the device from members 25 and 27. It will be seen that the refrigerant will be caused to pass in multiple series around member 10 and through annular chambers 29 and 30.

In mixing chambers of the class, the mixers, in order to be efficient, must in addition to beaters, etc., have scrapers which are reasonably sharp edged so they scrape loose and lift the mixture from the wall of the chamber. I plate the inside wall of the mixing chamber preferably with chromium as at 40, thus to provide a surface that is abrasion and rust proof and easily cleaned.

In the present organization, it will be seen that the parts may be welded to member 10 before the plating operation so this plating will not be injured by the welding heat.

An important feature of my device is that members 11 and 14 provide means for unequal expansion and contraction between members 10 and

13 without adding materially to the cost of the device.

It will be readily understood that if both ends of member 13 were secured to the chamber by means of ring 18, then unequal expansion and contraction would be a serious matter.

It will be understood that I have shown and described the preferred embodiment of my invention and that many minor detail changes may be made without departing from the spirit and scope of the present invention as recited in the appended claims.

Having thus shown and described my invention, I claim:

1. An ice cream freezing device of the class described, comprising an elongated inner cylinder, another cylinder positioned over said inner cylinder, one end being connected to the adjacent end of said inner cylinder, the other end having a short enlarged in diameter portion, an annular plate connected to the end of said enlarged portion and to said inner cylinder to form with said cylinder and said portion a narrow annular passageway around the greater part of the length of said inner cylinder and a relatively short and large in diameter annular extension thereto, such construction permitting independent expansion and contraction between said cylinders.

2. A device as receited in claim 1 including; longitudinally spaced inlet and outlet connections in the sides of said narrow passageway and relatively short extension, a yielding partition positioned between said passageway and extension having an opening positioned on the opposite side of the device from said inlet and outlet openings.

3. An ice cream freezing device of the class described, comprising an elongated inner cylinder, another cylinder positioned over and spaced from said inner cylinder, one end being connected to the adjacent end of said inner cylinder, the other end having a short enlarged in diameter portion, an annular plate secured to the end of said enlarged portion and to said inner cylinder, to thereby form a narrow annular passageway around the greater part of the length of said inner cylinder and a relatively short and large in diameter annular extension thereto, the construction of said device permitting independent expansion and contraction between said cylinders, longitudinally spaced inlet and outlet connections in adjacent sides of said narrow passageway and relatively short extension, a yielding partition positioned between said passageway and extension, its ends being spaced apart to form a refrigerant passageway and being positioned on the opposite side of the device from said inlet and outlet openings, said partition comprising a channel having its base secured to the wall of one of said cylinders, and an elastic band in said channel adapted to tightly contact the wall of the other cylinder.

LOUIS A. M. PHELAN.