May 7, 1929. F. D. PEARNE 1,711,745

RADIORECEIVER

Filed Aug. 7, 1926

Fig. 1.

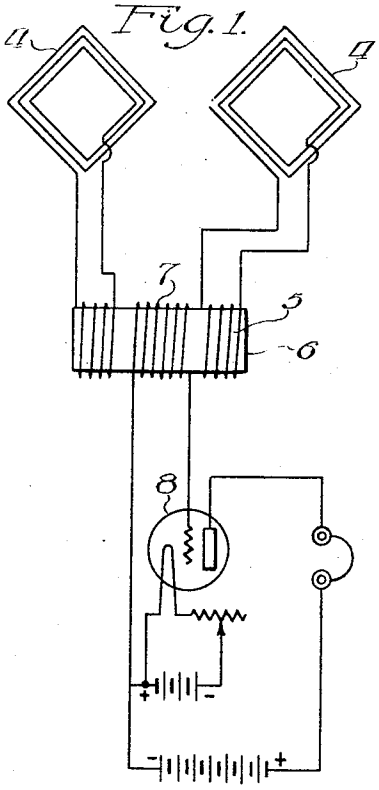

Fig. 2.

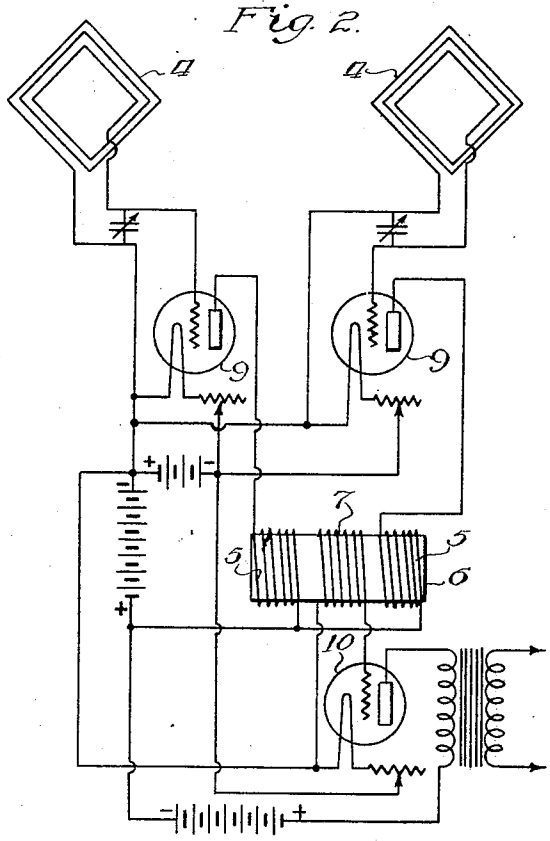

Fig. 3.

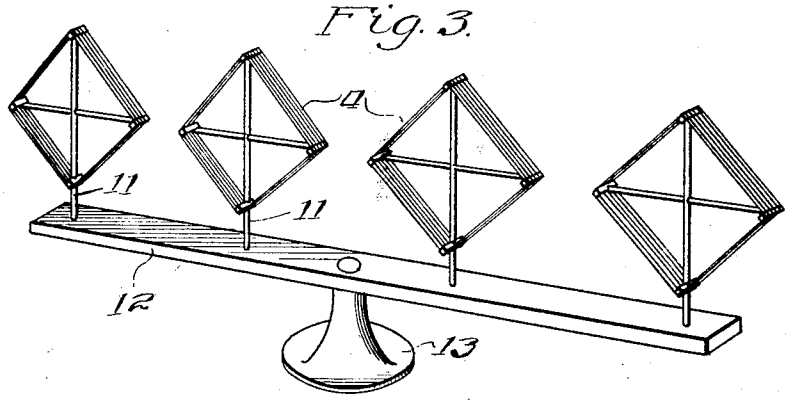

Witnesses.
Arthur M. Franke.
John E. Titus

Inventor.
Frank D. Pearne.
Pummer & Pummer
Attys.

Patented May 7, 1929. 1,711,745

UNITED STATES PATENT OFFICE.

FRANK D. PEARNE, OF CHICAGO, ILLINOIS; MARTHA K. PEARNE EXECUTRIX OF SAID FRANK D. PEARNE, DECEASED.

RADIORECEIVER.

Application filed August 7, 1926. Serial No. 127,899.

This invention relates to improvement in radio receivers, more especially to improvements in the antenna means for intercepting the waves.

It is well known that a wave has no effect on a loop antenna when the loop is at right angles to the wave and is of greatest effect when the loop is parallel with or pointed toward the wave. A commonly accepted reason is that the wave intercepts both sides of the loop simultaneously when the loop is at right angles and tends to set up currents flowing in the same directions in the two sides which meet and neutralize each other; and that the effect, when the loop is pointed toward the wave, is mainly due to the very small difference in time in which the wave intercepts the two sides. That is, the wave strikes the leading side and starts the current flowing in one direction and then passes on to the other side and causes a flow in the opposite direction.

Accordingly, in this invention, with the object of strengthening and prolonging the impulses received from the waves, I use two antennæ mounted in spaced relation, and each connected into the receiving set. In using loop antennæ the loops are in unidirectional alignment, therefore the waves are first effective on one and then on the other with a very slight time interval, and the impulses are effectively prolonged and strengthened in the receiving set, the slight phase displacement causing no appreciable difference in the sound vibrations.

Illustrative embodiments of my invention are shown in the accompanying drawings in which two methods of connecting the loops into the circuits of the receiving apparatus are shown. In the drawings,

Figure 1 is a circuit diagram showing a plurality of loops connected directly to a common transformer which connects to the grid circuit of the first tube.

Fig. 2 is a circuit diagram with amplifying means, inserted between the loops and the common transformer.

Fig. 3 is a perspective view of the loop mounting.

Although two loop antennæ 4 are shown in Fig. 1 and Fig. 2, more may be used, or other types of antennæ. As shown in Fig. 1 the antenna windings are connected in circuit with the similar primary windings 5 of the transformer 6, which has a secondary winding 7 connected into the grid circuit of the first tube 8 of a receiving set.

In Fig. 2 the windings of the loops 4 are each shown as connected to the filament and grid of tubes 9, and a variable condenser connected across the loops for tuning.

The primary windings 5 of the transformer 6 are, in this system, included in the plate circuits of the tubes 9, and the secondary winding 7 connected into the grid circuit of the first tube 10 of a receiving set as in Fig. 1. Preferably a loose coupling is made between the primaries 5 and the secondary 6 since radio frequency currents operate therein.

In the construction of the antenna mounting shown in Fig. 3, the loops 4 are mounted on posts 11 which are fixed in the support 12 with the loops all pointing in the same direction although not necessarily lying in the same plane. The support member 12 is mounted to swing on the base 13, so that the loops may all be swung in any direction and still remain in the same plane with reference to each other.

In operation the currents from the antennæ flow simultaneously in the primary windings 5 and are combined in effecting the secondary 7, the phase displacement being too slight to appreciably distort the sound waves, which are of comparatively low frequency, but being very effective in strengthening the high frequency carrier waves.

While two illustrative embodiments of the invention have been shown and described many omissions and alterations may be made without departing from the spirit of the invention, as defined in the following claims.

I claim:

1. In a radio receiving apparatus, a plurality of loop antennæ mounted in spaced relation and unidirectional alignment one behind the other, a transformer having similar primary windings connected with each of said antennæ, and a radio receiving apparatus having a first detector tube, said transformer having a secondary winding connected into the grid circuit of said tube.

2. In a radio receiving system, a plurality of loop aerials and a common support whereon said aerials are mounted in horizontal alinement, with their planes all disposed in substantially the same direction, in combination with a three-element tube and a common coupling means inductively connecting said tube to said aerials for integrating the re-

ceptive effort of the latter on said tube, said support being rotatable horizontally to accommodate directional selectivity of reception.

3. In a radio receiving system, a plurality of loop aerials. a common support whereon said aerials are severally mounted pivotally on their vertical axes and in mutual horizontal alinement, with their planes disposed in substantially the same direction, and means inductively related to said aerials to integrate the receptive effect thereof, in combination with complemental means to render the system effective, said support being rotatable horizontally to accommodate phase adjustment of the aerial assemblage relative to the breast of the waves to be intercepted.

4. A multiple aerial device comprising a vertically pivoted oblong support disposed horizontally, a plurality of inductively related loop aerials spaced apart and vertically pivoted thereon, said aerials being disposed in vertical planes and being mutually adjustable relative to the position of the waves to be intercepted by turning said support to an appropriate position and adjusting the aerials for edgewise presentation to the waves.

Signed at Chicago this 3rd day of August, 1926.

FRANK D. PEARNE.