April 17, 1956 N. E. LINDENBLAD 2,741,984

ELECTROMAGNETIC PUMPS FOR CONDUCTIVE FLUIDS

Filed May 28, 1953

Fig. 1.

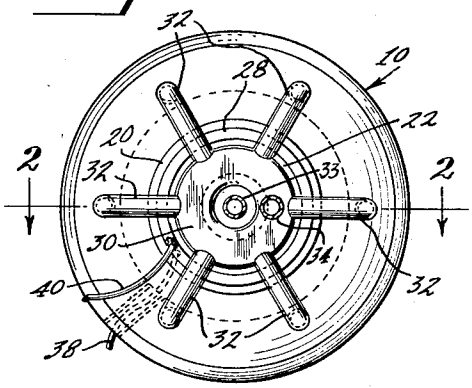

Fig. 2.

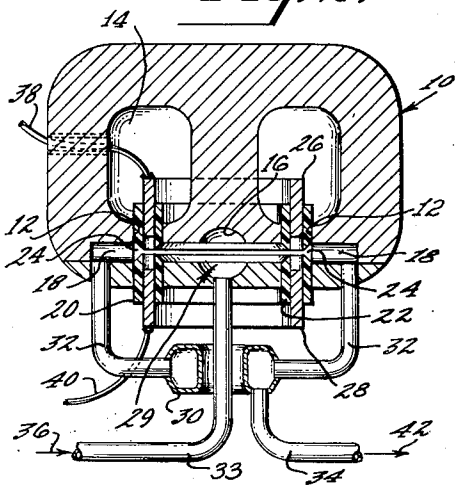

Fig. 3.

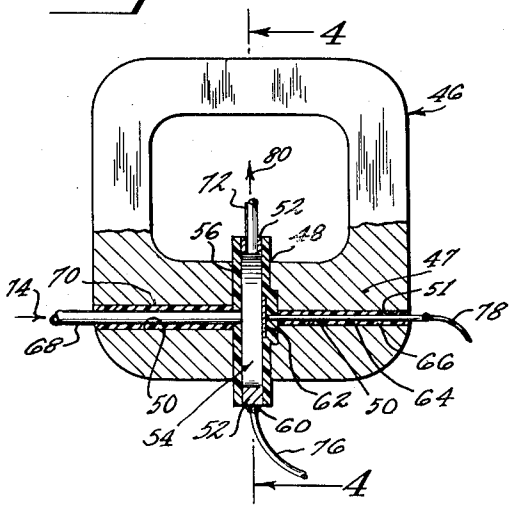

Fig. 4.

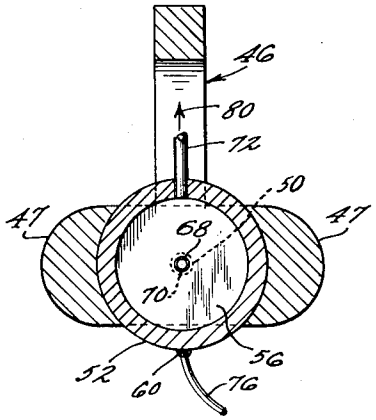

INVENTOR.

Nils E. Lindenblad

BY Morris B. Kahn

ATTORNEY

United States Patent Office 2,741,984
Patented Apr. 17, 1956

2,741,984

ELECTROMAGNETIC PUMPS FOR CONDUCTIVE FLUIDS

Nils E. Lindenblad, Princeton, N. J., assignor to Radio Corporation of America, a corporation of Delaware

Application May 28, 1953, Serial No. 358,141

5 Claims. (Cl. 103—1)

This invention relates to devices for raising, transferring or compressing liquids or gases and, more particularly, although not necessarily exclusively, to electromagnetic pumps which may be used with conductive fluids.

In accordance with the invention, there is provided an electromagnetic pump comprising a magnetic member having an air gap therein. A hollow container member of conductive material provided with a plurality of communicating peripheral conduits or ducts is secured within the air gap. A pair of conductive sleeves or collars is secured to the container. A hollow collecting ring of conductive material is disposed adjacent said container and is adapted to communicate with said container by means of the peripheral ducts. Terminal electrodes for the application of a potential of predetermined polarity are disposed in conductive contact with the conductive collars. Conductive fluid is introduced into the container through a duct or conduit provided for that purpose. In operation, a ring or disc of the enclosed conductive fluid is traversed by a direct current while also being traversed by a steady magnetic field perpendicular to the current. The conductive fluid will thus be made to move or spin in a circular path and to develop a centrifugal force which can be released into pumping effect.

It is an object, therefore, of the present invention to provide means for obtaining a spinning motion in a conductive fluid so that the centrifugal force thus developed can be further utilized.

It is a further object of the invention to provide a novel direct current electromagnetic pump for conductive fluids.

The novel features which are considered characteristic of the invention are set forth with particularity in the appended claims, but for a better understanding of the invention itself, both as to its organization and method of operation together with other and further objects and advantages, reference may be had to the following description of certain specified embodiments shown merely for illustration taken in connection with the accompanying drawings, in which:

Fig. 1 is a top plan view of an illustrative embodiment of a cylindrical means for providing a pump according to the present invention;

Fig. 2 is a view in sectional elevation of the device of Fig. 1, the view being taken along the line 2—2 of Fig. 1;

Fig. 3 is a view partially in cross section, of a planar means for rotating a conductive fluid; and

Fig. 4 is a view in cross section of the device of Fig. 3, the view being taken along the line 4—4 of Fig. 3.

Referring to Figs. 1 and 2, there is shown an illustrative embodiment of a cylindrical pump constructed in accordance with the teaching of the present invention. A toroidal or doughnut-shaped permanent magnet **10** is provided with a cylindrical air gap **12**, and a hollow central chamber or recess **16**. The air gap **12** communicates with the hollow interior **14** of the magnet **10**. A series of spoke-like peripheral openings or ducts **18** are disposed in one section of the magnet **10**. Each one of the ducts **18** communicates with the central recess **16**. Two concentric insulating sleeves **20** and **22** are disposed within the air gap **12**. Peripheral openings **24** are provided in the concentric sleeves **20** and **22**, and are adapted to communicate with the ducts **18**. Two terminal electrode members **26** and **28**, in the form of conductive rings or sleeves, are disposed to surround and to be secured along the respective edge portions thereof between the insulating members **20** and **22**. The disposition of the terminal electrode members **26** and **28** is such that a ring or a disc of conductive liquid may be enclosed thereby. A container **29** for a conductive fluid is thus provided. A hollow collecting member or ring **30** is provided for the container **29**. The collecting ring **30** is secured to the container **29** by means of the conduits **32** which are adapted to communicate with the ducts **18** in spoke-like arrangement (Fig. 1). An inlet conduit **33**, communicates with the central recess **16**. An outlet conduit **34**, communicates with the collecting ring **30**. Conductive fluid (not shown) is, or may be, introduced into the container **29** through the inlet **33** in the direction of the arrow **36**. Application of a direct current of predetermined polarity to the electrodes **26** and **28** by means of the leads **38** and **40** from a source (not shown) causes a ring of the enclosed conductive fluid to be traversed by the current while also being traversed by a steady magnetic field perpendicular to the current which field is produced or set up by the permanent magnet **10**. The conductive fluid will move in a circular path or spin out of the container **29** through the peripheral ducts **18** into the collecting ring **30**, emerging finally from the outlet **34** in the direction of the arrow **42**. The centrifugal force thus developed can be utilized for pumping action. Direct current is called for in the illustrative embodiment here set forth. However, it is feasible, and in some instances it may be desirable, to use alternating current providing the high losses due to eddy currents are not unreasonable.

Fig. 3 represents an illustrative embodiment of a planar pumping means in accordance with the present invention. A permanent magnet **46** having an enlarged portion **47** at one end thereof is provided with an air gap **48**. A central transverse opening or shaft **50** is provided in the enlarged portion of the magnet **46**. One portion **51** of the shaft **50** being of reduced diameter, as shown for example, in the illustration in Fig. 3. A disc-shaped hollow conductive ring or sleeve **52** is disposed within the air gap **48** and thus forms a conductive fluid container **54**. The container **54** is separated from the magnet **46** by means of the insulating members **56** and **58** which are secured to opposite faces of the magnet **46** within the air gap **48**. An electrode **60** is provided for the application of a potential to the device from a source (not shown). The electrode is, or may be, secured to the sleeve **52**. A second electrode **62** which may, for example, comprise a conductive disc or button is centrally disposed in the magnet **46** and is secured to the container **54** extending through the member **58** so as to be in conductive contact with the conductive fluid (not shown). A conductive connector **64** is disposed in the shaft **50** within a hollow insulating member **66**. The opposite portion of the shaft **50** is adapted to contain an inlet conduit **68**. The conduit **68**, which is insulated from the magnet **46** by means of the insulating member **70**, communicates with the central portion of the container **54**. An outlet conduit **72** is secured to a peripheral edge portion of the container **54**. Conductive fluid is, or may be, admitted to the inlet conduit **68** in the direction of the arrow **74**. Application of a direct current to the electrodes **60** and **62** from a source (not shown) by means of the leads **76** and **78** will produce a spinning motion in the conductive fluid forcing the fluid out of the container in the direction of the arrow **80**. The centrifugal force thus developed can be utilized for pumping action.

A novel electromagnetic pump for conductive fluids has thus been described. The pump is small, simple in construction and operation, and has no conventional moving parts other than the conductive fluid.

What is claimed is:

1. A pump for obtaining a spinning motion in a conductive fluid comprising a substantially toroidal-shaped permanent magnet structure, said permanent magnet structure providing a steady magnetic field in one plane and having a cylindrical gap therein, siad permanent magnet structure having a central chamber for receiving fluid, said magnet structure having a plurality of openings disposed to extend horizontally radially outwardly from said central chamber, conduit means interconnecting said openings, concentric insulating members disposed adjacent said openings, conductive electrodes in the form of sleeves disposed between said concentric insulating members to thereby provide a container within said chamber to enclose a conductive fluid and to provide electrical contact with fluid in said container, means in communication with said container to admit fluid to said container, means in communication with said container to direct fluid from said container, and direct current energizing means for energizing said electrodes in contact with said fluid to provide electric current flow in a direction prependicular to said magnetic field whereby said conductive fluid enclosed in said container is traversed by said direct current while also being traversed by said steady magnetic field perpendicular to said current so that said fluid will move in a circular path.

2. A structure for an electromagnetic pump for conductive fluids comprising a hollow doughnut-shaped permanent magnet, said magnet having a cylindrical air gap, insulating means disposed within said air gap to provide a container for said conductive fluid, conductive means disposed within the end portions of said insulating means to provide terminals for passing an electric current through said fluid, a collecting member connected to receive fluid from said container by means of ducts, said ducts being peripherally disposed in a spoke-like array, said magnet having a central recess, said central recess being connected to supply fluid to said container, an inlet duct connected to said central recess, and means for passing a direct current through said terminals.

3. A structure for a direct-current electromagnetic pump for conductive fluids comprising a hollow doughnut-shaped permanent magnet, said magnet having a cylindrical air gap, concentric insulating sleeves disposed within said air gap, conductive sleeves disposed within the end portions of said insulating sleeves to form therewith a container for said conductive fluid and to provide terminals therefor, a hollow ring-shaped collecting member externally disposed relative to said magnet and connected to receive fluid from said container by means of ducts, said ducts being disposed to pass through said magnet adjacent said air gap and being peripherally disposed in a spoke-like array, said magnet having a central recess, said central recess being connected to supply fluid to said container, an inlet duct connected to said central recess, and means for passing a direct current through the terminals provided by said conductive sleeves.

4. A structure for a direct-current electromagnetic pump for conductive fluids comprising a hollow doughnut-shaped permanent magnet, said magnet having a cylindrical air gap, concentric insulating sleeves disposed within said air gap, conductive sleeves disposed within the end portions of said insulating sleeves to form a container therewith for said conductive fluid and to provide terminals therefor, a hollow ring-shaped collecting member connected to receive fluid from said container by means of ducts, said ducts being peripherally disposed in a spoke-like array, said magnet having a central recess, said central recess being connected to supply fluid to said container, an inlet duct connected to said central recess, and means for passing a direct current through said terminals.

5. A structure for a direct-current electromagnetic pump for conductive fluids comprising a hollow doughnut-shaped permanent magnet, said magnet having a cylindrical air gap, concentric insulating sleeves disposed within said air gap, conductive sleeves disposed within the end portions of said insulating sleeves to form a container therewith for said conductive fluid and to provide terminals therefor, a hollow ring-shaped collecting member connected to receive fluid from said container by means of ducts, said ducts being peripherally disposed in a spoke-like array, said magnet having a central recess, said central recess being connected to supply fluid to said container, an inlet duct passing through the hollow center of said ring-shaped collecting member being connected to said central recess, and means for passing a direct currect through said terminals.

References Cited in the file of this patent

UNITED STATES PATENTS

2,652,778 Crever ---------- Sept. 22, 1953

FOREIGN PATENTS

239,816 Switzerland ---------- Mar. 1, 1946
661,756 Great Britain ---------- Nov. 28, 1951