C. S. HARDY.

METHOD AND APPARATUS FOR CLEANING TRIPE.

APPLICATION FILED JAN. 25, 1918. RENEWED DEC. 28, 1918.

1,294,455.

Patented Feb. 18, 1919.

3 SHEETS—SHEET 1.

Fig. 1.

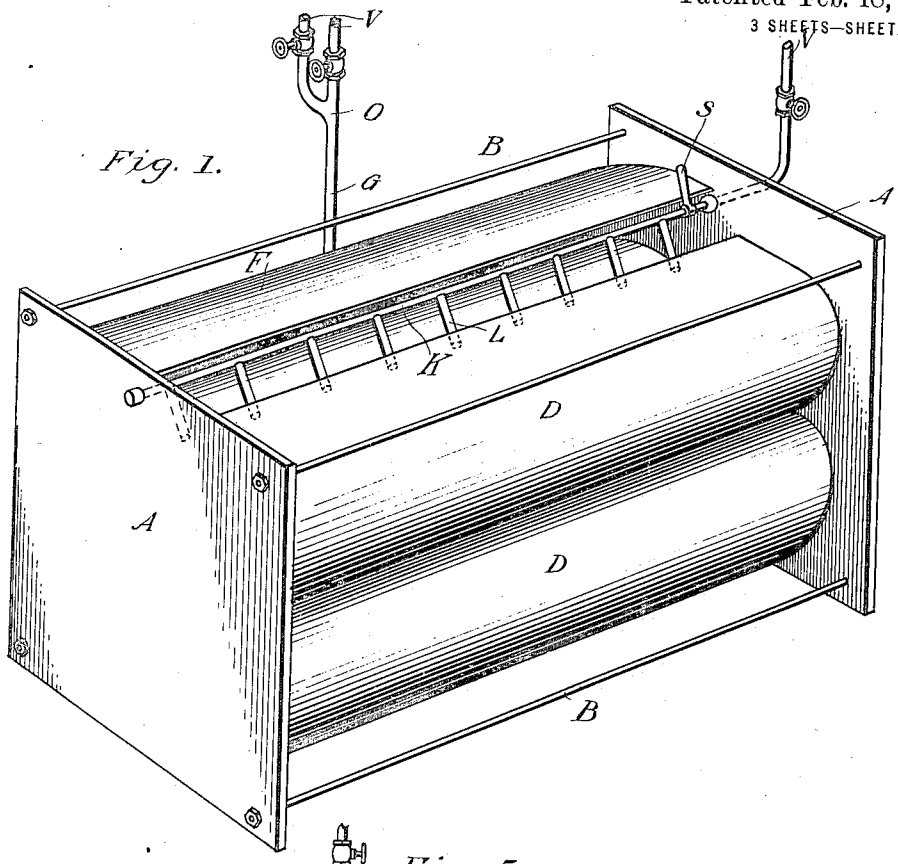

Fig. 5.

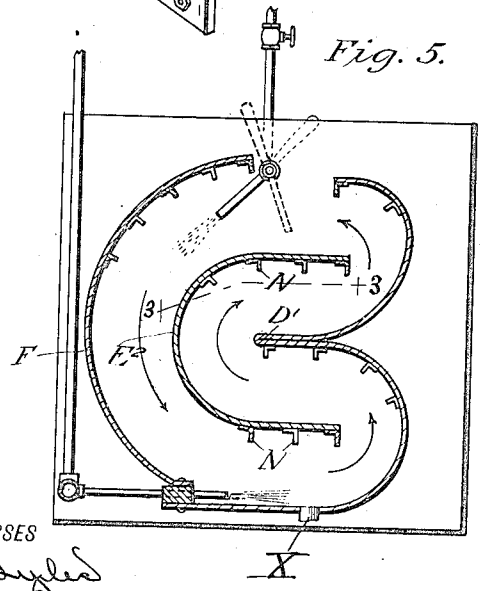

Fig. 3.

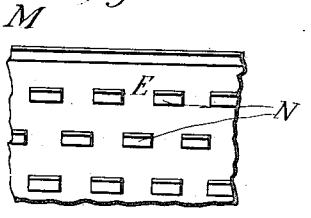

WITNESSES

J. M. Lyles

Geo. E. Brock.

INVENTOR

C. S. Hardy.

BY Munn & Co.

ATTORNEYS

C. S. HARDY.

METHOD AND APPARATUS FOR CLEANING TRIPE.

APPLICATION FILED JAN. 25, 1918. RENEWED DEC. 28, 1918.

1,294,455.

Patented Feb. 18, 1919.

3 SHEETS—SHEET 2.

Fig. 2.

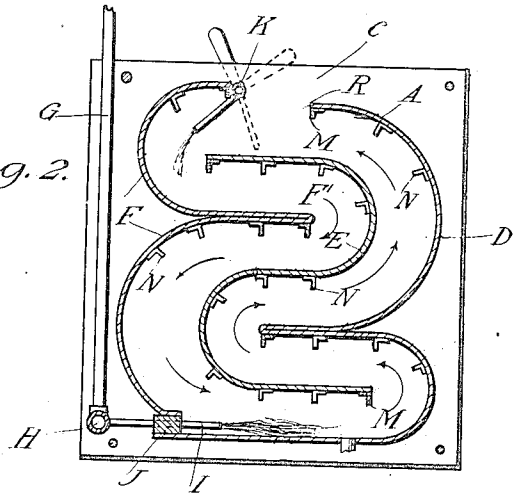

Fig. 6.

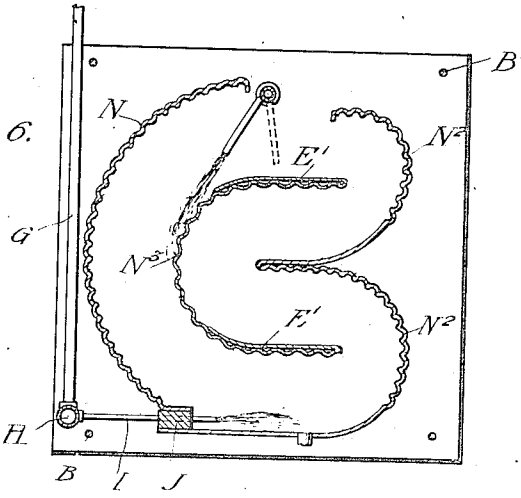

Fig. 4.

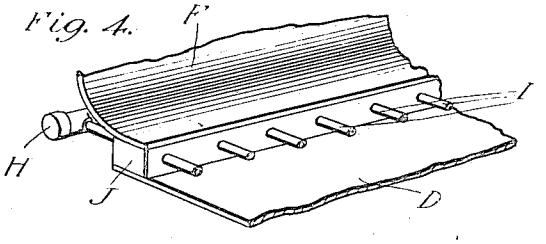

WITNESSES

M. Lyles

Geo. E. Brock.

INVENTOR

C. S. Hardy,

BY Munn & Co.

ATTORNEYS

C. S. HARDY.

METHOD AND APPARATUS FOR CLEANING TRIPE.

APPLICATION FILED JAN. 25, 1918. RENEWED DEC. 28, 1918.

1,294,455. Patented Feb. 18, 1919.

3 SHEETS—SHEET 3.

Fig. 7.

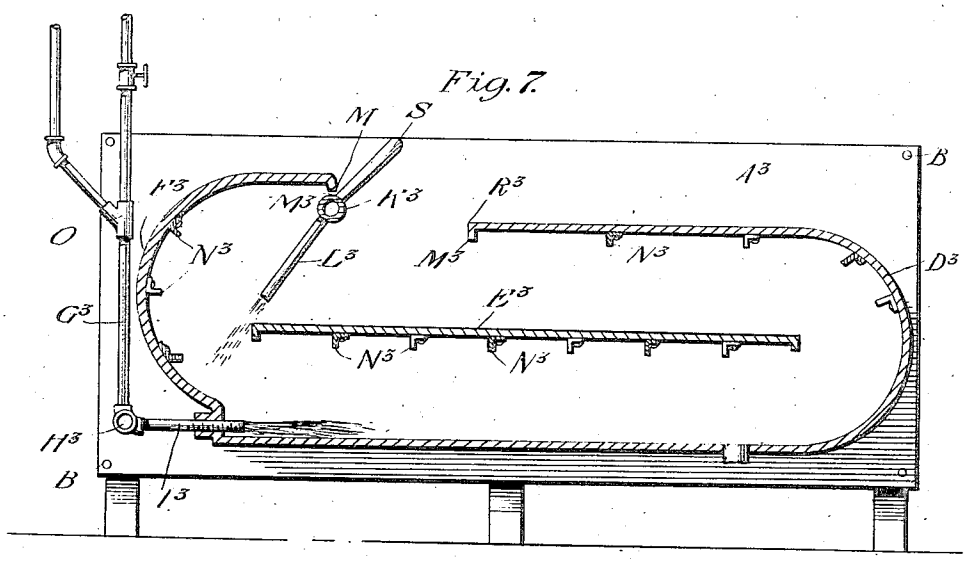

Fig. 8.

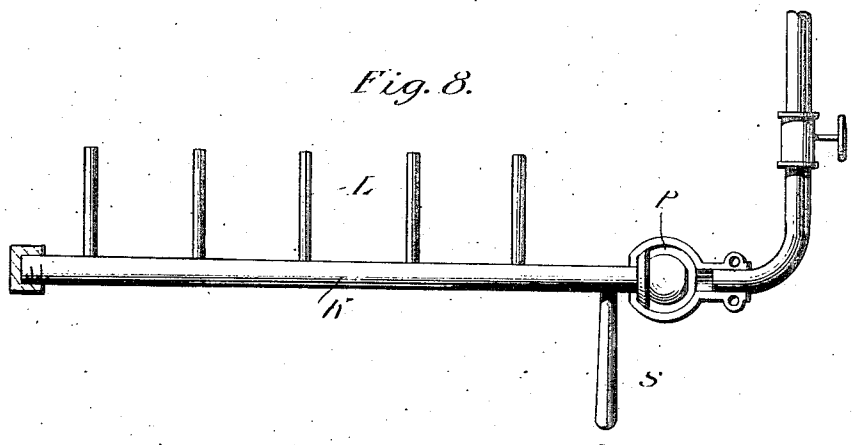

WITNESSES

George C. Hayes

Geo. S. Block

INVENTOR

C. S. Hardy.

BY Munn & Co

ATTORNEYS

UNITED STATES PATENT OFFICE.

CHARLES S. HARDY, OF SAN DIEGO, CALIFORNIA.

METHOD AND APPARATUS FOR CLEANING TRIPE.

1,294,455. Specification of Letters Patent. Patented Feb. 18, 1919.

Application filed January 25, 1918, Serial No. 213,668. Renewed December 28, 1918. Serial No. 268,705.

To all whom it may concern:

Be it known that I, CHARLES S. HARDY, a citizen of the United States, and a resident of San Diego, in the county of San Diego and State of California, have made certain new and useful Improvements in Methods and Apparatus for Cleaning Tripe, of which the following is a specification.

My invention relates to butchering and more particularly to methods and apparatus for cleaning tripe.

The present method of cleaning tripe is to take the abdomen of the animal, empty its contents rinsing the same in clean water and then pass it to a scalding tank in which the scalding material is held at a temperature of 140 degrees Fahrenheit, until the inner lining is scalded sufficiently to remove the undesired matter by scraping; the abdomen is then again rinsed and cooked and then becomes what is called tripe; the present operation is all by hand.

The present invention comprehends a method and apparatus that will perform these steps mechanically and the object of this invention is to provide a method and apparatus which performs better work than by hand and at a great saving in expense.

With this and other objects in view my invention consists in a novel method of cleaning tripe and an apparatus for carrying such method into effect. While my method is capable of expression in a variety of forms, I have shown in the drawing practical embodiments of the same in which—

Figure 1 is a perspective of one form of my apparatus.

Fig. 2 is a vertical section of same.

Fig. 3 is an enlarged sectional plan taken on line 3—3 of Fig. 5.

Fig. 4 is a perspective of steam injecting device.

Fig. 5 is a vertical section of another form of device.

Fig. 6 is a vertical section of a modified form of Fig. 5.

Fig. 7 is a vertical section of another form of apparatus.

Fig. 8 is an enlarged detail plan view partly in section, of water feeding and tripe ejector.

In Fig. 1 is shown one form of apparatus comprising two ends A, sides D and F, and a partition E which in this form of device is made in the shape of a reversed letter S; the top and bottom of sides D and F meet in an internal projection or shelf D′ and F′ respectively. The sides D and F and the partition E have attached at intervals the scrapers designated as N and at the extreme ends of these parts are placed the angular scrapers M; the ends A are grooved into which grooves the sides D and F fit, the grooves and sides having the same configuration, and parts thus specified are held in proper relation by bolts B passing through the ends and exteriorly of the sides; this construction completes a box or casing and the side D provides the bottom for such box and where the sides D and F meet they are secured to header strip J through which small steam and water pipes I pass from the combination header H which furnishes live steam and water through pipe G.

At the top of the box an opening C is provided through which the abdomen of the animal is inserted into the device, one edge R of said opening being free to admit the material and being located at a lower level than the upper edge of the side F adjacent to which point a header K is provided with a number of projecting tubular fingers L from which water may be injected into the box. The receptacle or box is filled with water to the level of edge R; steam is then turned on through header H and discharged into the water through the pipes I which heats the water and causes it to rise as indicated by the arrows; when the water becomes heated to a temperature of 140° the tripes are put in at the opening C and full steam turned through pipe O, and the temperature held at 140° by admitting water through the header K and tubular fingers L, the water being discharged in a downward direction and sufficient water is discharged through the opening to counterbalance the steam so that the temperature is held constantly at 140° F.; this operation lasts for about five minutes and thoroughly scalds the tripes. During this time the surplus water that is discharged through header K runs over the free edge R and this surplus carries off particles that are removed from the tripes during the operation; after a suitable period, usually about five minutes steam is shut off from pipe O and water instead is turned into said pipe O and at the same time water is discharging from header H to pipes I and through tubular fingers L

from header K causing a continuous tortuous vermiform circulation which carrying the tripes against the scrapers removes all dirt and thoroughly rinses the tripes, thus scalding the tripes and then rinsing after scalding. When the tripes are thoroughly rinsed, header K is thrown by means of handle S into position shown in Fig. 2 and in this position the fingers L intercept the tripes and guides them to the opening C through which they can be readily removed, thus completing the operation of the device. The header K can be thrown into any position as it works on a ball joint P as shown in Fig. 8. As shown in Fig. 3 the scrapers N are arranged in rows and in staggered relation to each other.

In Fig. 5 I have illustrated another form of apparatus in which the side F is made on a single curve and the side D with the inwardly projecting wall D′ projecting toward the side F between its top and bottom walls and in this space is placed the partition E^2 made ⊂⊃ shaped and having scrapers N on its under surface, the upper faces of the partition being smooth; the mode of operation of this form and the results attained are the same as that in the form first described, in detail.

In Fig. 6, is shown a type of device similar shaped to that in Fig. 5 except that the sides are corrugated the corrugations N′ and N^2 taking the place of the scrapers in the other forms.

It will be noted that the upper surfaces of the partitions and the bottom floor of the casing are smooth, the object being to obviate catching the dirt in pockets formed by corrugations, and can be used for cleaning other articles that scrapers N might tear.

Another form of apparatus is illustrated in Fig. 7 in which the ends A^3 support a casing or receptacle having each side D^3 and F^3 made a single curve or arc the side F^3 projecting over at a higher plane then the edge R^3 of the side D^3, and provided with the scrapers N^3 arranged on the sides and under surface of the projecting top of the side D^3, and in staggered relation as hereinbefore set forth; arranged between these sides is the partition E^3 which is arranged in such manner as to lie well within the concave side D^3 and partly in toward the side F^3; the pipes I^3 lead into the receptacle at the bottom from header H^3 and the pipes L^3 project from the header K^3 and can be manipulated by the handle S in a similar manner to that set forth for the forms previously described.

Each of the forms described function in the same manner, and it will be noted that there are no pockets or any obstructions to cause dirt to lodge anywhere, and that all parts of the apparatus are continuously subjected to a continuous current striking evenly against the scrapers which currents prevent material from gathering.

The device is provided with an outlet X which is located in the bottom of side D.

The device can also be used for other purposes, that is for washing and cleaning material that would tear and that is more tender than tripe and this is particularly true of the form illustrated as having corrugations as they will cause friction or scraping not as severe as angular scrapers.

The novelty of the device lies in the fact that there are no pockets, and that there is a continuous and unobstructed circulation at the same time causing many different currents and tumbling of the water caused by the many curves that it has to make.

I claim:

1. The herein described method of treating tripe consisting in introducing the tripe into a receptacle containing water, injecting steam at the bottom of the receptacle to heat the water to scalding temperature and to cause a circulation of the water and tripe through the receptacle in a vermiform circuit, and injecting water at the upper part of the receptacle to maintain the water at a predetermined temperature and to augment the travel of the water and tripe.

2. The herein described method of treating tripe consisting in introducing tripe into a receptacle containing water, causing the tripe to travel through the receptacle in a vermiform course, imparting a tumbling and scraping action to the tripe during such course, and carrying off by flotation extraneous matter freed from the tripe.

3. An apparatus for treating tripe including a receptacle containing water, means at the bottom of the receptacle for heating the water and giving a vermiform course of travel to the tripe within the receptacle, means for scraping the tripe, and means at the upper portion of the receptacle for carrying off by flotation, extraneous matter freed from the tripe by such scraping action and vermiform course.

4. An apparatus for treating tripe including a receptacle having ends and sides and an open top, the sides being oppositely concaved interiorly, a partition intermediate the top and bottom and extending into the concavity of the sides, the ends of said partition spaced from said sides, means for introducing water at the top of the receptacle, and means for introducing steam at the lower part of the receptacle.

5. An apparatus for treating tripe consisting of a receptacle having ends, a bottom, sides, and a top having an opening therethrough, the sides being oppositely curved to form concave inner walls, a partition disposed intermediate the top and bottom of said receptacle and extending into the

concavities of the respective sides, and each end of the partition spaced from the sides, means for introducing steam at the lower part of the receptacle.

6. An apparatus for treating tripe consisting of a receptacle having ends, a bottom, sides and a top having an opening therethrough, the sides being oppositely curved to form concaved inner walls, a partition disposed intermediate the top and bottom and extending into the concavities of the respective sides, each end of the partition spaced from the sides, said portion and sides having roughened scraping areas, and means for causing the tripe to travel within the sides and around the portion in a vermiform course.

7. An apparatus for treating tripe consisting of a receptacle for containing water, said receptacle including ends, a bottom, and curved sides the inner walls of which are oppositely concaved, a partition or shelf extending within said concavities, the upper ends of said sides projecting inwardly toward each other in different horizontal planes and terminating short of each other to form a top comprising two sections spaced by an opening, the sections disposed at different levels, means for causing vermiform circulation of water and tripe within said receptacle, and means adjacent said opening for intercepting the tripe and guiding it from said opening.

8. An apparatus for treating tripe consisting of a receptacle including ends, a top having an opening therethrough and curved sides one of which is reëntrant; a partition or shelf extending over said reëntrant, means for directing water into the upper portion of the receptacle and means for injecting steam into the lower portion of the receptacle to cause a veriform circulation for the tripe between the sides and the partition.

9. In an apparatus for treating tripe consisting of a receptacle having vertical ends, a bottom, a top having an opening therethrough, curved sides having a reëntrant, a S shaped partition disposed within the receptacle and overlying said reëntrants, means for introducing water and tripe at the top opening, and means for introducing steam at the lower portion to raise the water to scalding temperature and cause circulation in a vermiform course of the water and tripe carried therein around the reëntrants and partition.

10. An apparatus for treating tripe consisting of a receptacle having straight ends, a bottom, a top having an opening therethrough, oppositely curved sides, one side having a reëntrant, a ⊂ shaped partition disposed in the receptacle within the curved sides and overlying the reëntrant, means at the top opening for introducing water and tripe and means for introducing steam at the lower portion of the receptacle to raise the water to scalding temperature and cause circulation in a vermiform course of the water and tripe within the curved sides and around the ⊂ shaped partition.

11. An apparatus for treating tripe comprising a receptacle including straight ends, a bottom, a top having an opening therethrough its edges of which lie in different horizontal planes, curved sides having oppositely concaved inner walls, a horizontal partition or shelf in the receptacle the ends of which extend into the concavities of the sides, means for introducing water and tripe within said top opening and means for introducing steam into the lower part of the receptacle to raise the water to scalding temperature and cause circulation in a vermiform course within the curved sides and around the partition or shelf.

12. An apparatus for treating tripe including a receptacle having straight ends, sides having oppositely concaved inner walls, a top having an opening therethrough means for causing a vermiform course of travel for tripe within the receptacle, means for injecting steam into the lower portion of the receptacle, means for introducing water into the receptacle at said top opening, said means including hollow fingers which act as a guide to eject tripe from the receptacle through the top opening.

CHARLES S. HARDY.