(19) Europäisches Patentamt
European Patent Office
Office européen des brevets

(11) EP 3 771 673 A1

(12) EUROPEAN PATENT APPLICATION

(43) Date of publication:
03.02.2021 Bulletin 2021/05

(51) Int Cl.:
B65H 49/12 *(2006.01)* ***B65H 67/02*** *(2006.01)*
B65H 69/06 *(2006.01)*

(21) Application number: **20188118.2**

(22) Date of filing: **28.07.2020**

(84) Designated Contracting States:
AL AT BE BG CH CY CZ DE DK EE ES FI FR GB GR HR HU IE IS IT LI LT LU LV MC MK MT NL NO PL PT RO RS SE SI SK SM TR
Designated Extension States:
BA ME
Designated Validation States:
KH MA MD TN

(30) Priority: **30.07.2019 JP 2019140216**

(71) Applicant: **TMT Machinery, Inc.**
Osaka-shi, Osaka 541-0041 (JP)

(72) Inventor: **YAMAMOTO, Masato**
Kyoto-shi, Kyoto, 612-8686 (JP)

(74) Representative: **Grünecker Patent- und Rechtsanwälte**
PartG mbB
Leopoldstraße 4
80802 München (DE)

(54) PEG, PACKAGE EXCHANGING DEVICE, AND YARN PROCESSING SYSTEM

(57) A peg (24) includes a yarn supply package support portion (25) which is inserted into a yarn supply bobbin (B1) and supports a yarn supply package (P1) and a peg body (26) which supports the yarn supply package support portion (25) and the yarn supply package support portion (25) includes a rotation mechanism (25c) which rotates the yarn supply package (P1).

Fig.6

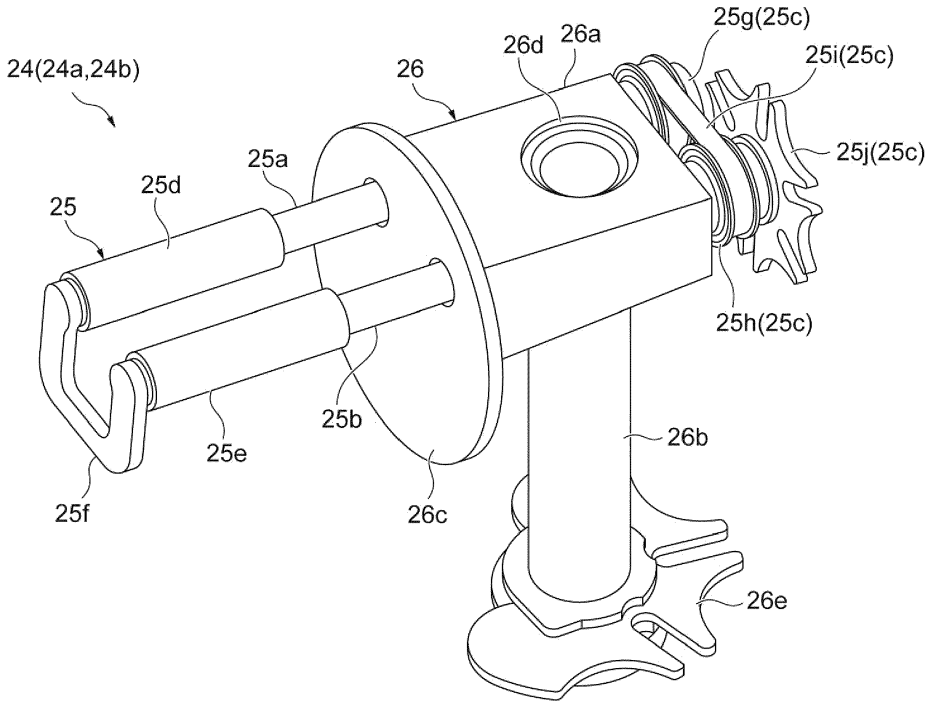

EP 3 771 673 A1

Description

TECHNICAL FIELD

[0001] An aspect of the invention relates to a peg, a package exchanging device, and a yarn processing system.

BACKGROUND

[0002] Patent Literature 1 (Japanese Unexamined Patent Publication No. H6-200434) describes a false-twisting machine as a textile machine that winds a synthetic yarn subjected to processing. The false-twisting machine includes a creel stand which is provided with a plurality of pegs supporting a yarn supply package, a false-twisting device which twists a synthetic yarn supplied from the yarn supply package, and a winding device which winds the synthetic yarn subjected to false-twisting so as to form a winding package.

[0003] In the creel stand, a pair of two pegs are used in order to continuously supply the yarn. In this configuration, the yarn on the inner layer side of the yarn supply package supported by one peg is connected to the yarn on the outer layer side of the yarn supply package supported by the other peg. Accordingly, in the creel stand, even when the yarn of one yarn supply package disappears, the yarn is supplied from the other yarn supply package and hence the yarn can be continuously supplied. In such a configuration, when the yarn of the yarn supply package disappears, a new package needs to be attached and the synthetic yarn of the yarn supply package supported by one peg and the synthetic yarn of the yarn supply package supported by the other peg need to be joined. The yarn joining operation of two yarn supply packages is performed by a yarn joining device (for example, Patent Literature 2 (see Japanese Unexamined Patent Publication No. S52-18917)).

SUMMARY

[0004] The yarn joining device draws out the yarn from the yarn supply package and guides the yarn to a yarn joining portion for entangling the yarn. The new yarn supply package is heavy since the yarn is fully wound. For that reason, the yarn supply package supported by the peg does not easily rotate. In this case, since an excessive tension is applied to the yarn when the yarn joining device catches the yarn of the yarn supply package and draws out the yarn, there is concern that a yarn breakage may occur.

[0005] An object of an aspect of the invention is to provide a peg, a package exchanging device, and a yarn processing system capable of preventing an occurrence of a yarn breakage during a yarn joining operation.

[0006] A peg according to an aspect of the invention is a peg for supporting a yarn supply package in which a synthetic yarn made of a synthetic fiber is wound on a yarn supply bobbin, including: a yarn supply package support portion which is inserted into the yarn supply bobbin and supports the yarn supply package; and a peg body which supports the yarn supply package support portion, in which the yarn supply package support portion includes a rotation mechanism which rotates the yarn supply package.

[0007] In the peg according to an aspect of the invention, the yarn supply package support portion includes the rotation mechanism that rotates the package. Accordingly, in the peg, the yarn supply package can be rotated when the yarn is drawn out from the yarn supply package. For that reason, it is possible to prevent an excessive tension from being applied to the yarn when the yarn joining device catches the yarn of the yarn supply package and draws out the yarn. Thus, in the peg, it is possible to prevent the occurrence of the yarn breakage during the yarn joining operation.

[0008] In one embodiment, the yarn supply package support portion may include a pair of package support members which extend in one direction, are parallel to each other, and are brought into contact with an inner peripheral surface of the yarn supply bobbin and the rotation mechanism may rotate the pair of package support members in a synchronization manner. In this configuration, the yarn supply package is supported at two points by the pair of package support members. In this way, when the yarn supply package is supported at two points and the pair of package support members are rotated in a synchronization manner, the yarn supply package does not rotate once when one package support member and the other package support member rotate once. For that reason, since the yarn supply package can be slightly rotated in the peg, the yarn can be fed by a small amount. Thus, it is possible to feed the yarn with high accuracy in accordance with the drawn amount of the yarn of the yarn joining device in the peg.

[0009] In one embodiment, the rotation mechanism may include a first pulley which is provided in one package support member, a second pulley which is provided in the other package support member, and a power transmission belt which is stretched between the first pulley and the second pulley. In this configuration, one package support member and the other package support member can be rotated in a synchronization manner.

[0010] In one embodiment, the rotation mechanism may include a rotated portion which is provided in one package support member or the other package support member and is rotationally driven by a device that attaches the yarn supply package to the peg. In this configuration, since the rotated portion is rotationally driven by the device, one package support member and the other package support member rotate in a synchronization manner. In this way, since each peg provided in the creel stand may not include a drive unit, a decrease in cost can be realized.

[0011] In one embodiment, a covering portion formed of resin may be provided in a portion contacting the inner

peripheral surface of the yarn supply bobbin in each of the pair of package support members. In this configuration, since a friction is generated with respect to the inner peripheral surface of the yarn supply bobbin by the covering portion formed of resin such as rubber having, for example, a friction force, the rotation of the pair of package support members can be reliably transmitted to the yarn supply package.

[0012] A package exchanging device according to an aspect of the invention is a package exchanging device for attaching a yarn supply package to a peg supporting the yarn supply package in which a synthetic yarn made of a synthetic fiber is wound on a yarn supply bobbin and including a rotation mechanism rotating the yarn supply package, the package exchanging device including: a collection device which collects the yarn supply bobbin from the peg; a supply device which attaches the yarn supply package to the peg; and a yarn joining device which joins a yarn of the yarn supply package attached by the supply device with a yarn of the yarn supply package held by the other peg, in which the yarn joining device includes a drive mechanism which drives the rotation mechanism of the peg.

[0013] In the package exchanging device according to an aspect of the invention, the yarn joining device includes the drive mechanism which drives the rotation mechanism of the peg. Accordingly, in the yarn joining device, the yarn supply package supported by the peg can be rotated when drawing out a yarn from the yarn supply package. For that reason, it is possible to prevent an excessive tension from being applied to the yarn when the yarn joining device catches the yarn of the yarn supply package and draws out the yarn. Thus, in the package exchanging device, it is possible to prevent the occurrence of the yarn breakage during the yarn joining operation.

[0014] A yarn processing system according to an aspect of the invention is a yarn processing system including: a creel stand which is provided with a plurality of pegs supporting a yarn supply package in which a synthetic yarn made of a synthetic fiber is wound on a yarn supply bobbin; a textile machine which processes the synthetic yarn supplied from the yarn supply package and forms a winding package; and a package exchanging device which attaches the yarn supply package to the peg, in which the peg includes a yarn supply package support portion which is inserted into the yarn supply bobbin and supports the yarn supply package and a peg body which supports the yarn supply package support portion, in which the yarn supply package support portion includes a rotation mechanism which rotates the package, in which the package exchanging device includes a collection device which collects the yarn supply bobbin from the peg, a supply device which attaches the yarn supply package to the peg, and a yarn joining device which joins a yarn of the yarn supply package attached by the supply device with a yarn of the yarn supply package held by the other peg, and in which the yarn joining device includes a drive mechanism which drives the rotation mechanism of the peg.

[0015] In the yarn processing system according to an aspect of the invention, the peg includes the rotation mechanism that rotates the package. The yarn joining device includes the drive mechanism that drives the rotation mechanism of the peg. Accordingly, in the yarn processing system, the yarn supply package supported by the peg can be rotated when the yarn joining device draws out the yarn from the yarn supply package. For that reason, it is possible to prevent an excessive tension from being applied to the yarn when the yarn joining device catches the yarn of the yarn supply package and draws out the yarn. Thus, in the yarn processing system, it is possible to prevent the occurrence of the yarn breakage during the yarn joining operation.

[0016] According to an aspect of the invention, it is possible to prevent the occurrence of the yarn breakage during the yarn joining operation.

BRIEF DESCRIPTION OF THE DRAWINGS

[0017]

FIG. 1 is a diagram illustrating a configuration of a false-twisting system according to an embodiment.
FIG. 2 is a perspective view illustrating a package holding unit of a first transporting device.
FIG. 3 is a perspective view illustrating a yarn supply package to which an adapter is attached.
FIG. 4 is a perspective view illustrating a package holding unit of a second transporting device.
FIG. 5 is a perspective view illustrating a creel stand.
FIG. 6 is a perspective view illustrating a peg.
FIG. 7 is a perspective view illustrating a package exchanging device.
FIG. 8A is a perspective view illustrating a holding unit.
FIG. 8B is a perspective view illustrating the holding unit.
FIG. 9 is a diagram illustrating a configuration of an exchange unit.
FIG. 10 is a side view illustrating a collection device.
FIG. 11 is a side view illustrating a supply device.
FIG. 12 is a perspective view illustrating a yarn joining device.
FIG. 13 is a perspective view illustrating the yarn joining device.
FIG. 14 is a perspective view illustrating the yarn joining device.

DETAILED DESCRIPTION

[0018] Hereinafter, preferred embodiments of the invention will be described in detail with reference to the accompanying drawings. In the description of the drawings, the same or corresponding components will be denoted by the same reference numerals and redundant

description will be omitted.

[0019] As illustrated in FIG. 1, a false-twisting system (a yarn processing system) 1 includes a false-twisting machine (a textile machine) 2, a first transporting device 3, a second transporting device 4, a yarn supply unit 5, a package replenishing device 6, and a package exchanging device 7. The false-twisting system 1 includes a control device (not illustrated) which overally controls the false-twisting machine 2, the first transporting device 3, the second transporting device 4, the package replenishing device 6, and the package exchanging device 7. In the false-twisting system 1 according to this embodiment, each of the false-twisting machine 2, the first transporting device 3, the second transporting device 4, the yarn supply unit 5, the package replenishing device 6, and the package exchanging device 7 is provided as a plurality of units. In the following description, the "Z direction" illustrated in the drawing is the vertical direction (up and down direction), the "X direction" is the horizontal direction, and the "Y direction" is a horizontal direction perpendicular to the X direction and the Z direction.

[0020] The false-twisting system 1 manufactures a winding package P2 (see FIG. 4) by processing yarns Y (see FIG. 3) supplied from a plurality of yarn supply packages PI (see FIG. 2). The yarn Y is, for example, a synthetic yarn made of thermoplastic synthetic fibers such as polyester and polyamide. The yarn supply package PI is formed by winding a partially oriented yarn (POY) on a yarn supply bobbin B1 (see FIG. 2). The winding package P2 is formed by winding a draw textured yarn (DTY) on a winding bobbin B2 (see FIG. 4).

[0021] The false-twisting machine 2 forms the winding package P2 by processing the yarn Y The false-twisting machine 2 includes a main base 2a and two winding tables 2b. The main base 2a is provided with a false-twisting device, a feeding roller, and the like. The winding table 2b is provided with a winding device, a doffing device, and the like. The main base 2a extends in the X direction. The winding table 2b extends in the X direction. The winding table 2b is disposed at a position facing the main base 2a in the Y direction (the width direction of the main base 2a). That is, two winding tables 2b are disposed at positions sandwiching the main base 2a.

[0022] The false-twisting machine 2 twists the yarns Y supplied from the plurality of yarn supply packages PI and winds the processed yarn on the winding bobbin B2 so as to form the winding package P2 (see FIG. 4). The false-twisting machine 2 supplies the formed winding package P2 to the second transporting device 4.

[0023] The first transporting device 3 transports the yarn supply package P1. The first transporting device 3 runs along, for example, a first rail R1 suspended from a ceiling. For example, the first rail R1 is disposed between one false-twisting machine 2 and the other false-twisting machine 2 and between the winding table 2b and the yarn supply unit 5. The first transporting device 3 transports the yarn supply package PI between a position where the yarn supply package PI is supplied and a predetermined package replenishing device 6. As illustrated in FIG. 2, the first transporting device 3 includes a first package holding unit 3a. The first package holding unit 3a is suspended from the first rail R1. The first package holding unit 3a holds the plurality of (for example, twelve) yarn supply packages P1. The first package holding unit 3a supports the yarn supply package PI by a support member (not illustrated) inserted into the yarn supply bobbin B1 of the yarn supply package P1.

[0024] As illustrated in FIG. 3, an adapter 10 is attached to the yarn supply package P1. The adapter 10 holds the yarn Y. The adapter 10 includes an attachment portion 11, a first holding unit 12, and a second holding unit 13. The attachment portion 11 is attached to the yarn supply bobbin B1 of the yarn supply package PI so as to be rotatable in a synchronization manner. The attachment portion 11 has a cylindrical shape. The attachment portion 11 is attached to the end portion of the yarn supply bobbin B1 protruding from the side surface of the yarn supply package P1.

[0025] The first holding unit 12 holds a first yarn end Y1 of the yarn Y on the outer layer side of the yarn supply package P1. The first holding unit 12 is provided in the attachment portion 11. The first holding unit 12 includes a first arm 12a, a first gripper 12b, and a first yarn guide 12c. The first arm 12a extends in the radial direction of the attachment portion 11 while the base end side is fixed to the side surface of the attachment portion 11. The first gripper 12b grips the first yarn end Y1. The first gripper 12b is provided at the front end side of the first arm 12a. The first yarn guide 12c is provided in the first arm 12a.

[0026] The second holding unit 13 holds a second yarn end Y2 of the yarn Y on the inner layer side (tail side) of the yarn supply package P1. The second holding unit 13 is provided in the attachment portion 11. The second holding unit 13 includes a second arm 13a, a second gripper 13b, and a second yarn guide 13c. The second arm 13a extends in the radial direction of the attachment portion 11 while the base end side is fixed to the side surface of the attachment portion 11. The second arm 13a is disposed so as to be located on the same line as the first arm 12a. The second gripper 13b grips the second yarn end Y2. The second gripper 13b is provided at the front end side of the second arm 13a. The second yarn guide 13c is provided in the second arm 13a.

[0027] In the adapter 10, the first yarn end Y1 drawn from the outer layer side of the yarn supply package PI is gripped by the first gripper 12b through the first yarn guide 12c of the first holding unit 12 and the second yarn end Y2 drawn from the inner layer side of the yarn supply package PI is gripped by the second gripper 13b through the first yarn guide 12c of the first holding unit 12 and the second yarn guide 13c of the second holding unit 13. The adapter 10 is attached to the yarn supply package PI by, for example, an operator. A bobbin cap BC (see FIG. 2) may be attached to the yarn supply bobbin B1 at an end portion opposite to the end portion to which the adapter 10 is attached.

[0028] As illustrated in FIG. 4, the second transporting device 4 transports the winding package P2. The second transporting device 4 runs along the first rail R1. The second transporting device 4 transports the winding package P2 between a predetermined false-twisting machine 2 and a storage facility (not illustrated) of the winding package P2. The second transporting device 4 includes a second package holding unit 4a. The second package holding unit 4a is suspended from the first rail R1. A plurality of (for example, sixteen) winding packages P2 are respectively held through the second package holding unit 4a. Specifically, the winding package P2 is held by supporting both end portions of each winding bobbin B2 with a package receiver.

[0029] As illustrated in FIG. 1, the yarn supply unit 5 supplies the yarn Y to the false-twisting machine 2. The yarn supply unit 5 is disposed adjacent to the false-twisting machine 2. The yarn supply unit 5 is disposed at a position facing the winding table 2b of the false-twisting machine 2 in the Y direction. The yarn supply unit 5 extends in the X direction. The yarn supply unit 5 includes a plurality of creel stands 20. The creel stand 20 holds the yarn supply package P1. The plurality of creel stands 20 are arranged in the X direction. In the yarn supply unit 5 according to this embodiment, the pair of creel stands 20 is arranged back to back in the Y direction.

[0030] As illustrated in FIG. 5, the creel stand 20 includes a creel base 21, four first columns 22a, 22b, 22c, and 22d, a partition plate 23, and a plurality of pegs 24. The creel base 21 is a frame-shaped frame body. Four first columns 22a to 22d are provided upright in the creel base 21. Four first columns 22a to 22d extend in the Z direction. Four first columns 22a to 22d are respectively arranged at predetermined intervals in the X direction and at predetermined intervals in the Y direction. The partition plate 23 is provided in the first columns 22a to 22d. The partition plates 23 are arranged at predetermined intervals in the Z direction of the first columns 22a to 22d. The partition plate 23 prevents the yarn supply package PI from falling.

[0031] The peg 24 supports the yarn supply package P1. The peg 24 is provided in the first columns 22a and 22b. The plurality of (for example, eight) pegs 24 are arranged at predetermined intervals in the Z direction of the first columns 22a and 22b. The peg 24 is disposed between the pair of partition plates 23. The peg 24 provided in the first column 22a and the peg 24 provided in the first column 22b are arranged at the same height position. In the following description, the peg 24 provided in the first column 22a is referred to as a "first peg 24a" and the peg 24 provided in the first column 22b is referred to as a "second peg 24b".

[0032] The first peg 24a and the second peg 24b are used as pairs. In this configuration, the yarn Y of the yarn supply package PI supported by the first peg 24a and the yarn Y of the yarn supply package PI supported by the second peg 24b are connected to each other. Specifically, the first yarn end Y1 on the outer layer side or the second yarn end Y2 on the inner layer side of the yarn Y of the yarn supply package PI supported by the first peg 24a is connected to the second yarn end Y2 on the inner layer side or the first yarn end Y1 on the outer layer side of the yarn supply package PI supported by the second peg 24b. Accordingly, one yarn Y is supplied from the yarn supply package PI supported by a pair of the first peg 24a and the second peg 24b.

[0033] As illustrated in FIG. 6, the peg 24 includes a yarn supply package support portion 25 and a peg body 26. The yarn supply package support portion 25 supports the yarn supply package P1. The yarn supply package support portion 25 includes package support members 25a and 25b and a rotation mechanism 25c. The package support members 25a and 25b are bar-shaped members. The package support members 25a and 25b are rotatably supported by the peg body 26. The package support members 25a and 25b extend in one direction, are parallel to each other, and are arranged with a predetermined gap therebetween. The peg 24 supports the yarn supply package PI at two points by the package support members 25a and 25b.

[0034] A covering portion 25d is provided in one end portion of the package support member 25a in the extending direction. A covering portion 25e is provided in one end portion of the package support member 25b in the extending direction. The covering portions 25d and 25e are formed of, for example, rubber (resin) or the like having a large friction coefficient. The covering portions 25d and 25e contact (come into contact with) the inner peripheral surface of the yarn supply bobbin B1 of the winding package P2. One end of the package support member 25a and one end of the package support member 25b are connected to each other by a connection member 25f.

[0035] The rotation mechanism 25c includes a driven pulley (a first pulley) 25g, a drive pulley (a second pulley) 25h, a power transmission belt 25i, and a first wheel (a rotated portion) 25j.

[0036] The driven pulley 25g is provided in the other end of the package support member 25a. The drive pulley 25h is provided in the other end of the package support member 25b. The power transmission belt 25i is stretched over the driven pulley 25g and the drive pulley 25h. The first wheel 25j is provided in the drive pulley 25h (the package support member 25b). In this embodiment, the first wheel 25j is a Geneva wheel that constitutes a Geneva mechanism. The first wheel 25j is rotated by the rotational driving of a first yarn joining driver 62a or a second yarn joining driver 63a of a yarn joining device 60 to be described later. In the yarn supply package support portion 25, the package support member 25a and the package support member 25b rotate in a synchronization manner by the rotation of the first wheel 25j.

[0037] The peg body 26 includes a peg body 26a and a rotation transmitting member 26b. The peg body 26a is a member having a rectangular parallelepiped shape. The peg body 26a supports the package support member

25a and the package support member 25b of the yarn supply package support portion 25 so as to be rotatable around the rotation shaft. The peg body 26a is provided with a regulation member 26c. The regulation member 26c has, for example, a disk shape. The regulation member 26c is disposed on one side surface of the peg body 26a. The regulation member 26c is attached by inserting the package support member 25a and the package support member 25b. The regulation member 26c faces the end surface of the yarn supply package PI and regulates the movement of the yarn supply package PI in the extending direction of the package support member 25a and the package support member 25b. An insertion hole 26d is formed in the peg body 26a. The first column 22a or the first column 22b of the creel stand 20 is inserted through the insertion hole 26d.

[0038] The rotation transmitting member 26b supports the peg body 26a. The peg body 26a is fixed to the upper end portion of the rotation transmitting member 26b. The rotation transmitting member 26b has a cylindrical shape. A hollow portion of the rotation transmitting member 26b communicates with the insertion hole 26d of the peg body 26a. The first columns 22a and 22b of the creel stand 20 are coaxially inserted through the rotation transmitting member 26b. The lower end portion of the rotation transmitting member 26b is provided with a second wheel 26e. In this embodiment, the second wheel 26e is a Geneva wheel that constitutes a Geneva mechanism. The second wheel 26e rotates by the driving of the first rotation driver 36a or the second rotation driver 37a of a rotation device 35 to be described later. The peg body 26 rotates with the rotation of the second wheel 26e. Accordingly, the yarn supply package support portion 25 rotates. The peg 24 rotates between an exchange position where the yarn supply bobbin B1 is collected and the yarn supply package PI is attached and a supply position where the yarn Y is supplied.

[0039] As illustrated in FIG. 1, the package replenishing device 6 supplies the yarn supply package PI to the package exchanging device 7. The package replenishing device 6 temporarily stores the yarn supply package PI transported by the first transporting device 3 and supplies the yarn supply package PI to the package exchanging device 7. The package replenishing device 6 stores the plurality of (for example, four) yarn supply packages P1. The package replenishing device 6 includes a transfer mechanism (not illustrated) which transfers the yarn supply package PI from the first transporting device 3.

[0040] The package exchanging device 7 collects the yarn supply bobbin B1 from the peg 24 and attaches the yarn supply package PI to the peg 24. As illustrated in FIG. 7, the package exchanging device 7 runs along the second rail R2. The second rail R2 is laid on a floor and extends in the X direction (the arrangement direction of the creel stands 20). That is, the package exchanging device 7 runs along the X direction. The package exchanging device 7 moves between one end of the yarn supply unit 5 and the other end of the yarn supply unit 5 where the package replenishing device 6 is disposed.

[0041] The package exchanging device 7 includes a running carrier (a running unit) 30, an elevating unit 31, a holding unit (a holding device) 32, and an exchange unit 33. Further, the package exchanging device 7 includes a control unit (not illustrated) which controls the operation of each unit.

[0042] The running carrier 30 includes a running base 30a and a column support portion 30b. The running base 30a has a rectangular parallelepiped shape. The running base 30a accommodates a wheel running along the second rail R2, a drive mechanism, and the like.

[0043] The column support portion 30b is provided upright on the running base 30a. The column support portion 30b includes four second columns 30c, 30d, 30e, and 30f and a wall portion 30g. The second columns 30c to 30f and the wall portion 30g extend in the Z direction. The second column 30c is disposed at one end portion in the X direction and one end portion in the Y direction in the running base 30a. The second column 30c is disposed at a corner portion of the running base 30a. The second column 30d is disposed at one end portion in the X direction and the other end portion in the Y direction in the running base 30a. The second column 30c and the second column 30d are disposed at positions facing each other in the Y direction. The second column 30d is disposed at a corner portion of the running base 30a.

[0044] The second column 30e is disposed at a position facing the second column 30c in the X direction so that a predetermined gap is formed with respect to the second column 30c. The second column 30f is disposed at the other end portion of the running base 30a in the Y direction between the second column 30c and the second column 30e in the X direction. The second column 30f is disposed so as to face the second column 30d in the X direction. The wall portion 30g extends in the X direction. The wall portion 30g is disposed at the other end portion in the X direction and the other end portion in the Y direction in the running base 30a. That is, the wall portion 30g is disposed at a corner portion of the running base 30a. The wall portion 30g is disposed so as to face the second column 30e in the Y direction and is disposed so as to face the second column 30f in the X direction.

[0045] The elevating unit 31 moves up and down with the operator on board. The elevating unit 31 is used during maintenance or the like. The elevating unit 31 is disposed at the other end portion in the X direction in the running base 30a of the running carrier 30. The elevating unit 31 includes a guide portion 31a and an elevating portion 31b.

[0046] The guide portion 31a is a guide rail. The guide portion 31a is disposed in the wall portion 30g of the column support portion 30b of the running carrier 30. The guide portion 31a extends in the Z direction. The elevating portion 31b is a working table on which the operator gets. The elevating portion 31b has a box shape. The elevating portion 31b is provided so as to be movable up and down in the Z direction along the guide portion 31a.

The elevating portion 31b moves along the guide portion 31a by a drive mechanism (not illustrated).

[0047] The holding unit 32 holds the plurality of (for example, four) yarn supply packages P1. The holding unit 32 holds the yarn supply packages PI as many as the yarn supply packages PI held by the package replenishing device 6. The holding unit 32 receives the yarn supply package PI supplied from the package replenishing device 6, temporarily stores the yarn supply package PI, and supplies the yarn supply package PI to the exchange unit 33.

[0048] As illustrated in FIG. 8A and FIG. 8B, the holding unit 32 includes a main body frame 32a, a package support portion 32b, and a drive unit 32c. The main body frame 32a is disposed in the running base 30a of the running carrier 30. The main body frame 32a is disposed at one end portion of the running base 30a in the X direction.

[0049] The package support portion 32b supports the yarn supply package P1. The package support portion 32b is provided so as to be rotatable. The package support portion 32b rotates in the range of about 90°. The package support portion 32b rotates between a replenishment position (see FIG. 8B) in which the yarn supply package PI is supplied from the package replenishing device 6 and a supply position (see FIG. 8A) in which the yarn supply package PI is supplied to the exchange unit 33. The drive unit 32c rotates the package support portion 32b. The drive unit 32c is, for example, an air cylinder.

[0050] The exchange unit 33 exchanges the yarn supply bobbin B1 and the yarn supply package PI in the peg 24. Specifically, the exchange unit 33 collects the yarn supply bobbin B1 from the peg 24 and attaches the yarn supply package PI to the peg 24. As illustrated in FIG. 7, the exchange unit 33 is provided adjacent to the holding unit 32. As illustrated in FIG. 9, the exchange unit 33 includes a base 34, a rotation device 35, a collection device 40, a supply device 50, a yarn joining device 60, and a moving device 70.

[0051] The base 34 supports the rotation device 35, the collection device 40, the supply device 50, and the yarn joining device 60. The base 34 is provided so as to be movable up and down along the column support portion 30b of the running carrier 30. The base 34 is provided at a position accessible to the holding unit 32.

[0052] The rotation device 35 rotates the peg 24 of the creel stand 20. The rotation device 35 is fixed to the base 34. The rotation device 35 is disposed at a position facing the yarn supply unit 5 in the base 34. The rotation device 35 includes a first drive mechanism 36 and a second drive mechanism 37.

[0053] The first drive mechanism 36 rotates the first peg 24a of the creel stand 20. The first drive mechanism 36 includes a first rotation driver 36a and a first rotation arm portion 36b. The first rotation driver 36a rotates the second wheel 26e of the first peg 24a. The first rotation driver 36a is a Geneva driver that constitutes a Geneva mechanism. The first rotation driver 36a rotates by the rotational driving of a motor (not illustrated). The first rotation arm portion 36b supports the first rotation driver 36a. The first rotation arm portion 36b is provided so as to be swingable in the horizontal direction. The first rotation arm portion 36b is driven by, for example, a motor or an air cylinder (not illustrated).

[0054] The second drive mechanism 37 rotates the second peg 24b of the creel stand 20. The second drive mechanism 37 includes a second rotation driver 37a and a second rotation arm portion 37b. The second rotation driver 37a rotates the second wheel 26e of the second peg 24b. The second rotation driver 37a is a Geneva driver that constitutes a Geneva mechanism. The second rotation driver 37a rotates by the rotational driving of a motor (not illustrated). The second rotation arm portion 37b supports the second rotation driver 37a. The second rotation arm portion 37b is provided so as to be swingable in the horizontal direction. The second rotation arm portion 37b is driven by, for example, a motor or an air cylinder (not illustrated).

[0055] The rotation device 35 changes the direction of the peg 24 by rotating the peg 24 when attaching the yarn supply package PI to the peg 24. The rotation device 35 operates the first drive mechanism 36 or the second drive mechanism 37 corresponding to the target peg 24. For example, when the first drive mechanism 36 is operated, the rotation device 35 swings the first rotation arm portion 36b so that the first rotation driver 36a engages with the second wheel 26e of the first peg 24a. The rotation device 35 rotates the first rotation driver 36a in one direction when the first rotation driver 36a engages with the second wheel 26e. In the peg 24, when the second wheel 26e rotates, the rotation transmitting member 26b rotates. Accordingly, the peg 24 rotates so that the front end portions of the package support members 25a and 25b face the exchange unit 33.

[0056] The collection device 40 collects the yarn supply bobbin B1 to which the adapter 10 is attached from the peg 24. As illustrated in FIG. 10, the collection device 40 includes a first support mechanism 41 and a first collection drive mechanism 42. The first support mechanism 41 supports the yarn supply bobbin B1. Further, the first support mechanism 41 moves forward and backward with respect to the peg 24 so as to collect the yarn supply bobbin B1. The first support mechanism 41 includes a first slide portion 41a and a first package support member 41b.

[0057] The first slide portion 41a includes a first linear guide 41c. A part of the first slide portion 41a can move in a predetermined direction through the first linear guide 41c. The first package support member 41b supports the yarn supply bobbin B1. The first package support member 41b is provided in a front end portion of the moving first slide portion 41a. The first package support member 41b extends in the extending direction of the first slide portion 41a.

[0058] The first collection drive mechanism 42 drives the first support mechanism 41. The first collection drive

mechanism 42 includes a first slide rail 42a, a first collection drive unit 42b, a first elevating portion 42c, and a second collection drive unit 42d. The first slide rail 42a is connected to the first slide portion 41a. The first slide rail 42a moves a part of the first slide portion 41a in a reciprocating manner by the driving of the first collection drive unit 42b. The first collection drive unit 42b is, for example, an air cylinder. The first elevating portion 42c is connected to the first slide portion 41a. The first elevating portion 42c moves the first slide portion 41a up and down by the driving of the second collection drive unit 42d. Accordingly, the first slide portion 41a swings. The second collection drive unit 42d is, for example, a motor.

[0059] A collection operation of the yarn supply bobbin B1 by the collection device 40 will be described. The collection device 40 advances a part of the first slide portion 41a of the first support mechanism 41 by the first collection drive mechanism 42 with respect to the peg 24 rotated by the rotation device 35 so that the first package support member 41b is located in the hollow portion of the yarn supply bobbin B1. At this time, the collection device 40 swings the first slide portion 41a of the first support mechanism 41 downward by the first collection drive mechanism 42 so that the first package support member 41b is inclined with respect to the horizontal direction. When the first package support member 41b is located at the hollow portion of the yarn supply bobbin B1, the collection device 40 swings the first slide portion 41a upward by the first collection drive mechanism 42 so that the first package support member 41b becomes horizontal. Accordingly, the first package support member 41b contacts the yarn supply bobbin B1 so that the yarn supply bobbin B1 is lifted and the yarn supply bobbin B1 is separated from the package support members 25a and 25b. The collection device 40 retracts a part of the first slide portion 41a of the first support mechanism 41 by the first collection drive mechanism 42. As described above, the collection device 40 collects the yarn supply bobbin B1 from the peg 24.

[0060] The supply device 50 supplies the yarn supply package PI to the peg 24. As illustrated in FIG. 11, the supply device 50 includes a second support mechanism 51 and a second supply drive mechanism 52. The second support mechanism 51 supports the yarn supply package P1. Further, the second support mechanism 51 moves forward and backward with respect to the peg 24 so as to supply the yarn supply package P1. The second support mechanism 51 includes a second slide portion 51a and a second package support member 51b.

[0061] The second slide portion 51a includes a second linear guide 51c. A part of the second slide portion 51a can move in a predetermined direction through the second linear guide 51c. The second package support member 51b supports the yarn supply package P1. The second package support member 51b is provided in the front end portion of the moving second slide portion 51a. The second package support member 51b extends in the extending direction of the second slide portion 51a.

[0062] The second supply drive mechanism 52 drives the second support mechanism 51. The second supply drive mechanism 52 includes a second slide rail 52a, a first supply drive unit 52b, a second elevating portion 52c, and a second supply drive unit 52d. The second slide rail 52a is connected to the second slide portion 51a. The second slide rail 52a moves a part of the second slide portion 51a in a reciprocating manner by the driving of the first supply drive unit 52b. The first supply drive unit 52b is, for example, an air cylinder. The second elevating portion 52c is connected to the second slide portion 51a. The second elevating portion 52c moves the second slide portion 51a up and down by the driving of the second supply drive unit 52d. Accordingly, the second slide portion 51a swings. The second supply drive unit 52d is, for example, a motor.

[0063] An acquisition operation in which the supply device 50 acquires the yarn supply package PI from the holding unit 32 will be described. The supply device 50 acquires the yarn supply package PI from the holding unit 32 when the package exchanging device 7 moves. When the exchange unit 33 is stopped at a predetermined height position with respect to the holding unit 32, the supply device 50 advances a part of the second slide portion 51a of the second support mechanism 51 by the second supply drive mechanism 52 with respect to the yarn supply package PI supported by the package support portion 32b of the holding unit 32 so that the second package support member 51b is located in the hollow portion of the yarn supply package P1. At this time, the supply device 50 swings the second slide portion 51a of the second support mechanism 51 downward by the second supply drive mechanism 52 so that the second package support member 51b is inclined with respect to the horizontal direction. When the second package support member 51b is located at the hollow portion of the yarn supply package PI, the supply device 50 swings the second slide portion 51a upward by the second supply drive mechanism 52 so that the second package support member 51b becomes horizontal. Accordingly, the second package support member 51b contacts the yarn supply package PI so that the yarn supply package PI is lifted and the yarn supply package PI is separated from the package support portion 32b. The supply device 50 retracts a part of the second slide portion 51a of the second support mechanism 51 by the second supply drive mechanism 52. As described above, the supply device 50 acquires the yarn supply package PI from the holding unit 32.

[0064] A supply operation in which the supply device 50 supplies the yarn supply package PI to the peg 24 will be described. The supply device 50 advances a part of the second slide portion 51a of the second support mechanism 51 by the second supply drive mechanism 52 with respect to the peg 24 from which the yarn supply bobbin B1 is separated so that the package support members 25a and 25b of the peg 24 are located in the hollow portion

of the yarn supply package P1. When the package support members 25a and 25b of the peg 24 are located in the hollow portion of the yarn supply package PI, the supply device 50 swings the second slide portion 51a downward by the second supply drive mechanism 52 so that the second package support member 51b is inclined with respect to the horizontal direction. Accordingly, the package support members 25a and 25b of the peg 24 contact the yarn supply package PI so that the yarn supply package PI is supported by the peg 24 and the second package support member 51b is separated from the yarn supply package P1. The supply device 50 retracts a part of the second slide portion 51a of the second support mechanism 51 by the second supply drive mechanism 52. As described above, the supply device 50 attaches the yarn supply package PI to the peg 24.

[0065] The yarn joining device 60 joins the yarn Y of the yarn supply package PI supported by the first peg 24a and the yarn Y of the yarn supply package PI supported by the second peg 24b. As illustrated in FIGS. 12, 13, and 14, the yarn joining device 60 includes a catching and guiding mechanism 61, a first rotation mechanism (an operation mechanism) 62, a second rotation mechanism (an operation mechanism) 63, and a yarn joining mechanism 64.

[0066] The yarn joining device 60 is provided so as to be movable by a movement mechanism (not illustrated) in a direction (the Y direction) in which the exchange unit 33 faces the yarn supply unit 5. The yarn joining device 60 moves between a standby position in which the yarn joining device 60 is disposed in the base 34 and a yarn joining position in which the yarn joining device 60 moves toward the yarn supply unit 5 so as to advance outward in relation to the base 34.

[0067] The catching and guiding mechanism 61 catches the yarn Y of the yarn supply package PI and guides the yarn Y to the yarn joining mechanism 64. The catching and guiding mechanism 61 catches the first yarn end Y1 of the yarn Y of the yarn supply package PI supported by one peg 24 and the second yarn end Y2 of the yarn Y of the yarn supply package PI supported by the other peg 24 and guides the yarns to the yarn joining mechanism 64. The catching and guiding mechanism 61 includes a suction portion 61a and a yarn joining arm portion 61b.

[0068] The suction portion 61a sucks and catches the yarn Y The suction portion 61a includes a suction pipe 61c, a suction nozzle 61d, and a hook portion 61e. The suction nozzle 61d is provided in the front end portion of the suction pipe 61c. The suction nozzle 61d sucks the yarn Y A negative pressure source (not illustrated) is connected to the suction pipe 61c. Accordingly, a suction flow is generated in the suction nozzle 61d. The base end side of the suction pipe 61c is connected to the yarn joining arm portion 61b. The hook portion 61e is provided at a position facing the suction nozzle 61d and the front end portion of the suction pipe 61c. The hook portion 61e locks the yarn Y entangled by the yarn joining device 60. The yarn joining arm portion 61b moves the suction portion 61a. The yarn joining arm portion 61b includes a link mechanism and a plurality of motors. The yarn joining arm portion 61b is supported by a bracket 61f.

[0069] Each of the first rotation mechanism 62 and the second rotation mechanism 63 operates the peg 24 so as to rotate the yarn supply package P1. Each of the first rotation mechanism 62 and the second rotation mechanism 63 rotates the yarn supply package PI so that the yarn Y is fed from the yarn supply package PI when guiding the yarn Y to the yarn joining mechanism 64 by the catching and guiding mechanism 61.

[0070] The first rotation mechanism 62 operates the first peg 24a. The first rotation mechanism 62 includes a first yarn joining driver 62a, a first motor 62b, and a first yarn joining arm portion 62c. The first yarn joining driver 62a is rotatably and axially supported by the first yarn joining arm portion 62c. The first yarn joining driver 62a is provided with a first driven pulley 62d. The first motor 62b is fixed to the first yarn joining arm portion 62c. A first drive pulley 62e is connected to the output shaft of the first motor 62b. The first motor 62b drives the first drive pulley 62e so as to rotate about an axis. A first power transmission belt 62f is stretched over the first driven pulley 62d and the first drive pulley 62e. Accordingly, the first yarn joining driver 62a rotates by the rotational driving of the first motor 62b.

[0071] The second rotation mechanism 63 operates the second peg 24b. The second rotation mechanism 63 includes a second yarn joining driver 63a, a second motor 63b, and a second yarn joining arm portion 63c. The second yarn joining driver 63a is rotatably and axially supported by the second yarn joining arm portion 63c. The second yarn joining driver 63a is provided with a second driven pulley 63d. The second motor 63b is fixed to the second yarn joining arm portion 63c. The second drive pulley 63e is connected to the output shaft of the second motor 63b. The second motor 63b drives the second drive pulley 63e so as to rotate around a shaft. A second power transmission belt 63f is stretched over the second driven pulley 63d and the second drive pulley 63e. Accordingly, the second yarn joining driver 63a rotates by the rotational driving of the second motor 63b.

[0072] The yarn joining mechanism 64 performs a yarn joining operation. The yarn joining mechanism 64 includes a splicer 66, a first guide mechanism 67, and a second guide mechanism 68.

[0073] The splicer 66 includes a yarn joining portion 66a and a pair of sandwiching mechanisms 66b and 66c. The yarn joining portion 66a entangles the yarn Y of the yarn supply package PI supported by the first peg 24a and the yarn Y of the yarn supply package PI supported by the second peg 24b. The sandwiching mechanisms 66b and 66c are provided at positions sandwiching the yarn joining portion 66a. The sandwiching mechanisms 66b and 66c sandwich the yarn Y inserted into the chamber of the yarn joining portion 66a.

[0074] As illustrated in FIGS. 12 and 13, the first guide

mechanism 67 locks and guides the yarn Y The first guide mechanism 67 includes a first hook 67a, a second hook 67b, and a third hook 67c. The first hook 67a, the second hook 67b, and the third hook 67c are provided so as to be swingable. The first hook 67a is provided with a potentiometer (not illustrated) that detects a tension of the yarn Y The yarn joining device 60 controls the operation of the first motor 62b of the first rotation mechanism 62 on the basis of the detection result of the potentiometer. That is, the yarn joining device 60 draws the yarn Y from the yarn supply package PI at a predetermined tension by adjusting the rotation amount (feed amount) of the yarn supply package P1 on the basis of the detection result of the potentiometer.

[0075] The second guide mechanism 68 locks and guides the yarn Y. The second guide mechanism 68 includes a first hook 68a, a second hook 68b, and a third hook 68c. The first hook 68a, the second hook 68b, and the third hook 68c are provided so as to be swingable. The first hook 68a is provided with a potentiometer (not illustrated) which detects the tension of the yarn Y. The yarn joining device 60 controls the operation of the second motor 63b of the second rotation mechanism 63 on the basis of the detection result of the potentiometer. That is, the yarn joining device 60 adjusts the rotation amount (feed amount) of the yarn supply package P1 on the basis of the detection result of the potentiometer and draws the yarn Y from the yarn supply package PI with a predetermined tension.

[0076] A yarn joining operation of the yarn joining device 60 will be described. Specifically, an example of a case in which the yarn joining device 60 joins the first yarn end Y1 on the outer layer side of the yarn supply package PI supported by the first peg 24a and the second yarn end Y2 on the inner layer side of the yarn supply package PI supported by the second peg 24b will be described.

[0077] When the yarn joining operation starts, the yarn joining device 60 operates the first peg 24a by the first rotation mechanism 62 and operates the second peg 24b by the second rotation mechanism 63 so that the adapter 10 is rotated to a position in which the first yarn end Y1 and the second yarn end Y2 can be caught by the suction portion 61a as illustrated in FIG. 14. Specifically, in the first rotation mechanism 62, the first yarn joining driver 62a is engaged with the first wheel 25j of the first peg 24a and the first motor 62b is driven to rotate the first yarn joining driver 62a. Similarly, in the second rotation mechanism 63, the second yarn joining driver 63a is engaged with the first wheel 25j of the second peg 24b and the second motor 63b is driven to rotate the second yarn joining driver 63a. When the first yarn joining driver 62a and the second yarn joining driver 63a rotate, the yarn supply package PI supported by each of the first peg 24a and the second peg 24b rotates, so that the adapter 10 rotates. The yarn joining device 60 detects a detection object (not illustrated) provided in the adapter 10 by a sensor (not illustrated) and controls the first motor 62b and the second motor 63b on the basis of the detection result of the sensor so that the adapter 10 is rotated to a predetermined position.

[0078] When the adapter 10 is rotated, the yarn joining device 60 operates the yarn joining arm portion 61b of the catching and guiding mechanism 61 so that the suction portion 61a catches the first yarn end Y1 from the adapter 10 of the yarn supply package PI supported by the first peg 24a and catches the second yarn end Y2 from the adapter 10 of the yarn supply package PI supported by the second peg 24b. At this time, the yarn joining device 60 operates the first peg 24a by the first rotation mechanism 62 and operates the second peg 24b by the second rotation mechanism 63 so that the yarn supply package PI is rotated. Accordingly, the yarn Y is drawn out from the yarn supply package PI at a predetermined tension.

[0079] The yarn joining device 60 allows the suction portion 61a to hook the yarn Y having the first yarn end Y1 on the first guide mechanism 67 and guide the yarn Y to the splicer 66 and to hook the yarn Y having the second yarn end Y2 on the second guide mechanism 68 and guide the yarn Y to the splicer 66. When the yarn Y is guided to the splicer 66, the yarn joining device 60 performs the yarn joining operation of the splicer 66. Accordingly, the yarn joining device 60 joins the first yarn end Y1 on the outer layer side of the yarn supply package PI supported by the first peg 24a and the second yarn end Y2 on the inner layer side of the yarn supply package PI supported by the second peg 24b.

[0080] The moving device 70 rotationally moves the collection device 40, the supply device 50, and the yarn joining device 60. The moving device 70 moves each of the collection device 40, the supply device 50, and the yarn joining device 60 to a work position for the peg 24. Further, the moving device 70 moves the collection device 40 and the supply device 50 to a work position for the holding unit 32. As illustrated in FIG. 9, the moving device 70 includes a rotation support portion 71 and an exchange unit driving unit 72.

[0081] The rotation support portion 71 supports the collection device 40, the supply device 50, and the yarn joining device 60. The rotation support portion 71 is provided in the base 34 so as to be rotatable around a rotation shaft extending in the vertical direction. The rotation support portion 71 supports the collection device 40, the supply device 50, and the yarn joining device 60 so that the collection device 40, the supply device 50, and the yarn joining device 60 are respectively disposed in three different directions when viewed from the direction of the rotation shaft of the rotation support portion 71.

[0082] The rotation support portion 71 includes a wheel (not illustrated). The wheel is a Geneva wheel that constitutes a Geneva mechanism. The exchange unit driving unit 72 rotates the rotation support portion 71. The exchange unit driving unit 72 is a Geneva driver that constitutes a Geneva mechanism. The exchange unit driving unit 72 rotates by the rotational driving of a motor (not

illustrated). In the moving device 70, the rotation support portion 71 rotates by the driving of the exchange unit driving unit 72.

[0083] The moving device 70 stops the rotation support portion 71 at seven positions. The moving device 70 stops the rotation support portion 71 at a position in which the collection device 40 collects the yarn supply bobbin B1 from the first peg 24a, a position in which the collection device 40 collects the yarn supply bobbin B1 from the second peg 24b, a position in which the supply device 50 supplies the yarn supply package PI to the first peg 24a, a position in which the supply device 50 supplies the yarn supply package PI to the second peg 24b, a position in which the yarn joining device 60 performs a yarn joining operation, a position in which the supply device 50 acquires the yarn supply package PI from the holding unit 32, and a position in which the collection device 40 supplies the yarn supply bobbin B1 to the holding unit 32.

[0084] Next, an operation of the package exchanging device 7 will be described.

[Package replenishing operation]

[0085] The package exchanging device 7 runs to the package replenishing device 6 when the yarn supply package PI held by the holding unit 32 disappears. When the package exchanging device 7 is located at a position in front of the package replenishing device 6, the holding unit 32 rotates the package support portion 32b. Specifically, the holding unit 32 operates the drive unit 32c so that the package support portion 32b is located at a replenishment position (see FIG. 8A). The package replenishing device 6 transfers the yarn supply package PI to the holding unit 32 by a transfer device. Accordingly, the yarn supply package PI is supplied (replenished) to the package support portion 32b of the holding unit 32. Additionally, when the collected yarn supply bobbin B1 is held by the holding unit 32, the collected yarn supply bobbin B1 is transferred to the package replenishing device 6 and then the yarn supply package PI is supplied to the holding unit 32.

[Package exchanging operation]

[0086] An exchange operation of the yarn supply package PI by the package exchanging device 7 will be described. In the following description, an example in which a new yarn supply package PI is attached to the first peg 24a will be described. Additionally, it is determined whether the yarn supply package PI needs to be exchanged or not on the basis of a detection result of a sensor (not illustrated) detecting the remaining amount of the yarn Y of the yarn supply package P1.

[0087] The package exchanging device 7 moves the exchange unit 33 to a height position of a predetermined peg 24 when the package exchanging device runs to a position before the creel stand 20 that requires the exchange of the yarn supply package P1. The rotation device 35 of the package exchanging device 7 operates the first drive mechanism 36 so that the first peg 24a is rotated and the first peg 24a is located at an exchange position.

[0088] Further, the moving device 70 stops the collection device 40 at the work position. Specifically, the moving device 70 rotates the rotation support portion 71 by driving the exchange unit driving unit 72. Next, the collection device 40 collects the yarn supply bobbin B1 from the first peg 24a. The collection device 40 collects the yarn supply bobbin B1 by the first support mechanism 41.

[0089] Next, the moving device 70 stops the supply device 50 at the work position. Then, the supply device 50 attaches the yarn supply package PI to the first peg 24a by the second support mechanism 51. When the yarn supply package PI is attached to the first peg 24a, the rotation device 35 operates the first drive mechanism 36 so as to rotate the first peg 24a and position the first peg 24a at a supply position.

[0090] Next, the moving device 70 locates the yarn joining device 60 at the work position. Then, the yarn joining device 60 allows the catching and guiding mechanism 61 to catch the first yarn end Y1 from the adapter 10 of the yarn supply package PI supported by the first peg 24a and to catch the second yarn end Y2 from the adapter 10 of the yarn supply package PI supported by the second peg 24b. At this time, the yarn joining device 60 operates the first peg 24a by the first rotation mechanism 62 and operates the second peg 24b by the second rotation mechanism 63. The yarn joining device 60 joins the caught first and second yarn ends Y1 and Y2. As described above, the exchange of the yarn supply package PI ends.

[0091] Additionally, the yarn joining device 60 preferably ends the joining operation of the first yarn end Y1 and the second yarn end Y2 and then operates the first peg 24a by the first rotation mechanism 62 and operates the second peg 24b by the second rotation mechanism 63 so as to rotate the yarn supply package PI and position the yarn supply package PI at a predetermined position. The predetermined position is appropriately set by the inner shape of the bobbin cap BC attached to the yarn supply package P1. In accordance with the shape of the bobbin cap BC, when the yarn supply package PI rotates, there is a case in which the first package support member 41b or the second package support member 51b contacts the bobbin cap BC when the first package support member 41b of the collection device 40 and the second package support member 51b of the supply device 50 are inserted into the yarn supply bobbin B1. For that reason, it is possible to prevent the contact between the bobbin cap BC and the first package support member 41b or the second package support member 51b by rotating the yarn supply package PI to a predetermined position in response to the inner shape of the bobbin cap BC. In addition, the attachment position of the bobbin cap BC corresponds to the attachment position of the adapter 10. For that reason, it is possible to detect the

position (direction) of the bobbin cap BC by detecting the position of the adapter 10.

[0092] As described above, in the false-twisting system 1 according to the embodiment, the creel stand 20 of the yarn supply unit 5 includes the plurality of pegs 24. The peg 24 includes the yarn supply package support portion 25 which is inserted into the yarn supply bobbin B1 and supports the yarn supply package P1. The yarn supply package support portion 25 includes the rotation mechanism 25c which rotates the yarn supply package P1. Accordingly, in the peg 24, the yarn supply package PI can be rotated when the yarn Y is drawn from the yarn supply package P1. For that reason, it is possible to prevent an excessive tension from being applied to the yarn Y when the yarn joining device 60 catches the yarn Y of the yarn supply package PI and draws out the yarn Y Thus, it is possible to prevent the occurrence of the yarn breakage during the yarn joining operation in the peg 24.

[0093] In the peg 24 according to the embodiment, the yarn supply package support portion 25 includes the pair of package support members 25a and 25b which extend in one direction, are parallel to each other, and are brought into contact with the inner peripheral surface of the yarn supply bobbin B1. The rotation mechanism 25c rotates the pair of package support members 25a and 25b in a synchronization manner. In this configuration, the yarn supply package PI is supported at two points by the pair of package support members 25a and 25b. In this way, when the yarn supply package PI is supported at two points and the pair of package support members 25a and 25b are rotated in a synchronization manner, the yarn supply package PI does not rotate once when the package support member 25a and the package support member 25b rotate once. For that reason, since the yarn supply package PI can be slightly rotated in the peg 24, the yarn Y can be fed by a small amount. Thus, it is possible to feed the yarn Y with high accuracy in accordance with the drawn amount of the yarn Y of the yarn joining device 60 in the peg 24.

[0094] In the peg 24 according to the embodiment, the rotation mechanism 25c includes the driven pulley 25g which is provided in the package support member 25a, the drive pulley 25h which is provided in the package support member 25b, and the power transmission belt 25i which is stretched between the driven pulley 25g and the drive pulley 25h. In this configuration, the package support member 25a and the package support member 25b can be rotated in a synchronization manner.

[0095] In the peg 24 according to the embodiment, the rotation mechanism 25c includes the first wheel 25j which is provided in the package support member 25b and is rotationally driven by the yarn joining device 60 attaching the yarn supply package PI to the peg 24. In this configuration, when the first wheel 25j is rotationally driven by the first rotation mechanism 62 or the second rotation mechanism 63, the package support member 25a and the package support member 25b rotate in a synchronization manner. In this way, since each peg 24 provided in the creel stand 20 may not include a drive unit, a decrease in cost can be realized.

[0096] In the peg 24 according to the embodiment, the covering portions 25d and 25e which are formed of resin are respectively formed in the portions contacting the inner peripheral surface of the yarn supply bobbin B1 in the package support member 25a and the package support member 25b. In this configuration, since a friction is generated with respect to the inner peripheral surface of the yarn supply bobbin B1 by the covering portions 25d and 25e formed of, for example, resin such as rubber having a friction force, the rotation of the pair of package support members 25a and 25b can be reliably transmitted to the yarn supply package P1.

[0097] In the package exchanging device 7 according to the embodiment, the yarn joining device 60 includes the first rotation mechanism 62 and the second rotation mechanism 63 which rotate the first wheel 25j of the peg 24. Accordingly, in the yarn joining device 60, the yarn supply package PI supported by the peg 24 can be rotated when drawing the yarn Y from the yarn supply package P1. For that reason, it is possible to prevent an excessive tension from being applied to the yarn Y when the yarn joining device 60 catches the yarn Y of the yarn supply package PI and draws out the yarn Y Thus, in the package exchanging device 7, it is possible to prevent the occurrence of the yarn breakage during the yarn joining operation.

[0098] Although the embodiment of the invention has been described above, the invention is not necessarily limited to the above-described embodiment and various modifications can be made without departing from the spirit of the invention.

[0099] In the above-described embodiment, an example of the false-twisting system 1 including the false-twisting machine 2 has been described as a textile machine. However, the textile machine is not limited to the false-twisting machine, but may be another textile machine.

[0100] In the above-described embodiment, an example in which the yarn supply package support portion 25 of the peg 24 includes the pair of package support members 25a and 25b has been described. However, the yarn supply package support portion may include one or more (three or more) package support members.

[0101] In the above-described embodiment, an example in which the first wheel 25j of the rotation mechanism 25c of the peg 24 is a Geneva wheel, the first yarn joining driver 62a and the second yarn joining driver 63a of the first rotation mechanism 62 and the second rotation mechanism 63 of the yarn joining device 60 are the Geneva drivers, and the package support member 25a and the package support member 25b are rotated by the Geneva mechanism has been described. However, the package support member 25a and the package support member 25b may be rotated by another mechanism.

[0102] In the above-described embodiment, an example in which the rotation mechanism 25c of the peg 24 is operated by the first rotation mechanism 62 and the sec-

ond rotation mechanism 63 of the yarn joining device 60 to rotate the package support member 25a and the package support member 25b has been described. However, the yarn joining device 60 may not include the first rotation mechanism 62 and the second rotation mechanism 63. In this case, the rotation mechanism 25c of the peg 24 may include a drive unit (a motor or the like).

[0103] In the above-described embodiment, an example in which the collection device 40 includes the first support mechanism 41 and the first collection drive mechanism 42 has been described. However, the configuration of the collection device 40 is not limited thereto and one capable of collecting the yarn supply bobbin B1 from the peg 24 may be used. Further, an example in which the supply device 50 includes the second support mechanism 51 and the second supply drive mechanism 52 has been described. However, the configuration of the supply device 50 is not limited thereto and one capable of attaching the yarn supply package PI to the peg 24 may be used.

[0104] In the above-described embodiment, an example in which the first drive mechanism 36 of the rotation device 35 includes the first rotation driver 36a and the first rotation arm portion 36b has been described. However, the configuration of the first drive mechanism 36 is not limited thereto and a mechanism capable of rotating the peg 24 may be used. The same applies to the second drive mechanism 37.

[0105] In the above-described embodiment, an example in which the catching and guiding mechanism 61 of the yarn joining device 60 includes the suction portion 61a and the yarn joining arm portion 61b has been described. However, the configuration of the catching and guiding mechanism 61 is not limited thereto and a mechanism catching the yarn Y of the yarn supply package PI and guiding the yarn to the splicer 66 may be used.

[0106] In the above-described embodiment, an example in which the first rotation mechanism 62 of the yarn joining device 60 includes the first yarn joining driver 62a, the first motor 62b, and the first yarn joining arm portion 62c has been described. However, the first rotation mechanism 62 may be a mechanism capable of rotating the rotation mechanism 25c of the peg 24. The same applies to the second rotation mechanism 63.

[0107] In the above-described embodiment, an example in which the rotation support portion 71 of the moving device 70 includes the Geneva wheel, the exchange unit driving unit 72 is the Geneva driver, and the rotation support portion 71 is rotated by the Geneva mechanism has been described. However, the rotation support portion 71 may be rotated by another mechanism.

[0108] In the above-described embodiment, an example in which the collection device 40, the supply device 50, and the yarn joining device 60 are integrally held in the exchange unit 33 has been described. However, each of the collection device 40, the supply device 50, and the yarn joining device 60 may be independently provided.

[0109] In the above-described embodiment, an example in which the collection device 40, the supply device 50, and the yarn joining device 60 are supported by the rotation support portion 71 provided so as to be rotatable around a rotation shaft extending in the vertical direction and the rotation support portion 71 is rotated so as to move each device to the work position has been described. However, the mechanism that locates the collection device 40, the supply device 50, and the yarn joining device 60 at the work position is not limited thereto.

[0110] 1...FALSE-TWISTING SYSTEM (YARN PROCESSING SYSTEM), 2...FALSE-TWISTING MACHINE (TEXTILE MACHINE), 7...PACKAGE EXCHANGING DEVICE, 20...CREEL STAND, 24...PEG, 25...YARN SUPPLY PACKAGE SUPPORT PORTION, 25a...PACKEGE SUPPORT MEMBER, 25b...PACKEGE SUPPORT MEMBER, 25c...ROTATIONAL MECHANISM, 25d...COVERING PORTION, 25e...COVERING PORTION, 25g...DEIVEN PULLEY (FIRST PULLEY), 25h...DRIVE PULLEY (SECOND PULLEY),25i...POWER TRANSMISSION BELT, 25j...FIRST WHEEL (ROTATED PORTION), 26...PEG BODY, 40...COLLECTION DEVICE, 50...SUPPLY DEVICE, 60...JOINING DEVICE, 62...FIRST ROTATIONAL MECHANISM, 63... SECOND ROTATIONAL MECHANISM, B1...YARN SUPPLY BOBBIN, P1...YARN SUPPLY PACKAGE, P2...WINDING PACKEGE.

Claims

1. A peg (24) for supporting a yarn supply package (PI) in which a synthetic yarn (Y) made of a synthetic fiber is wound on a yarn supply bobbin (B1), comprising:

   a yarn supply package support portion (25) which is inserted into the yarn supply bobbin (B1) and supports the yarn supply package (PI); and
   a peg body (26) which supports the yarn supply package support portion (25),
   wherein the yarn supply package support portion (25) includes a rotation mechanism (25c) which rotates the yarn supply package (PI).

2. The peg (24) according to claim 1,
   wherein the yarn supply package support portion (25) includes a pair of package support members (25a, 25b) which extend in one direction, are parallel to each other, and are brought into contact with an inner peripheral surface of the yarn supply bobbin (B1), and
   wherein the rotation mechanism (25c) rotates the pair of package support members (25a,25b) in a synchronization manner.

3. The peg (24) according to claim 2,

wherein the rotation mechanism (25c) includes a first pulley (25g) which is provided in one package support member (25a), a second pulley (25h) which is provided in the other package support member (25b), and a power transmission belt (25i) which is stretched between the first pulley (25g) and the second pulley (25h).

4. The peg (24) according to claim 2 or 3,
wherein the rotation mechanism (25c) includes a rotated portion (25j) which is provided in one package support member (25a) or the other package support member (25b) and is rotationally driven by a device that attaches the yarn supply package (PI) to the peg (24).

5. The peg (24) according to any one of claims 2 to 4, wherein a covering portion (25d,25e) formed of resin is provided in a portion contacting the inner peripheral surface of the yarn supply bobbin (B1) in each of the pair of package support members(25a,25b).

6. A package exchanging device (7) for attaching a yarn supply package (PI) to a peg (24) supporting the yarn supply package (PI) in which a synthetic yarn (Y) made of a synthetic fiber is wound on a yarn supply bobbin (B1) and including a rotation mechanism (25c) rotating the yarn supply package (PI), the package exchanging device (7) comprising:

a collection device (40) which collects the yarn supply bobbin (B1) from the peg (24);
a supply device (50) which attaches the yarn supply package (PI) to the peg (24); and
a yarn joining device (60) which joins a yarn (Y) of the yarn supply package (PI) attached by the supply device (50) with a yarn (Y) of the yarn supply package (PI) held by the other peg (24),
wherein the yarn joining device (60) includes a drive mechanism (62,63) which drives the rotation mechanism (25c) of the peg (24).

7. A yarn processing system (1) comprising:

a creel stand (20) which is provided with a plurality of pegs (24) supporting a yarn supply package (PI) in which a synthetic yarn (Y) made of a synthetic fiber is wound on a yarn supply bobbin (B1);
a textile machine (2) which processes the synthetic yarn (Y) supplied from the yarn supply package (PI) and forms a winding package (P2); and
a package exchanging device (7) which attaches the yarn supply package (PI) to the peg (24),
wherein the peg (24) includes a yarn supply package support portion (25) which is inserted into the yarn supply bobbin (B1) and supports the yarn supply package (PI) and a peg body (26) which supports the yarn supply package support portion (25),
wherein the yarn supply package support portion (25) includes a rotation mechanism (25c) which rotates the yarn supply package (PI),
wherein the package exchanging device (7) includes a collection device (40) which collects the yarn supply bobbin (B1) from the peg (24), a supply device (50) which attaches the yarn supply package (PI) to the peg (24), and a yarn joining device (60) which joins a yarn (Y) of the yarn supply package (PI) attached by the supply device (50) with a yarn (Y) of the yarn supply package (PI) held by the other peg (24), and
wherein the yarn joining device (60) includes a drive mechanism (62,63) which drives the rotation mechanism (25c) of the peg (24).

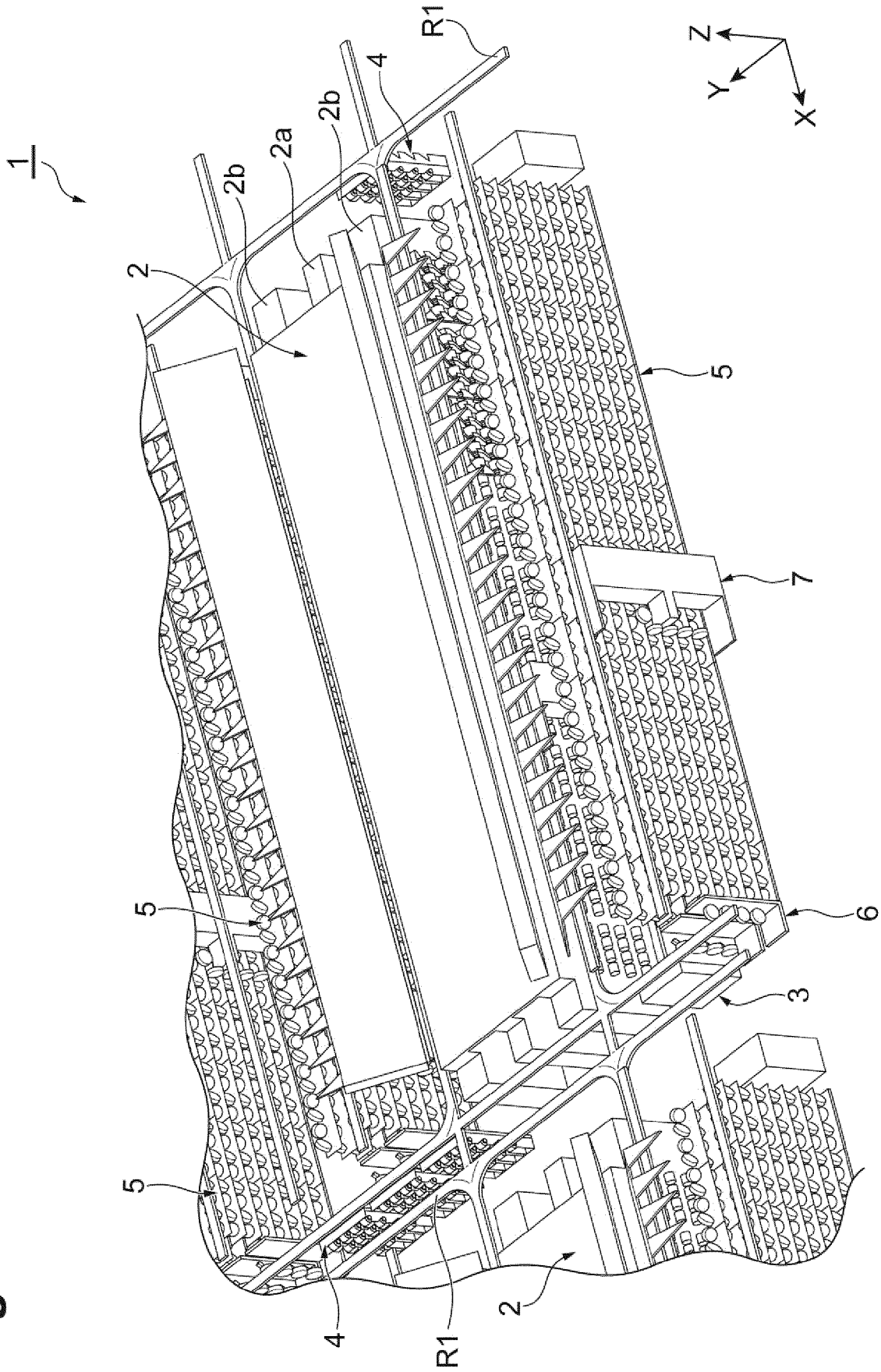

Fig.1

Fig.2

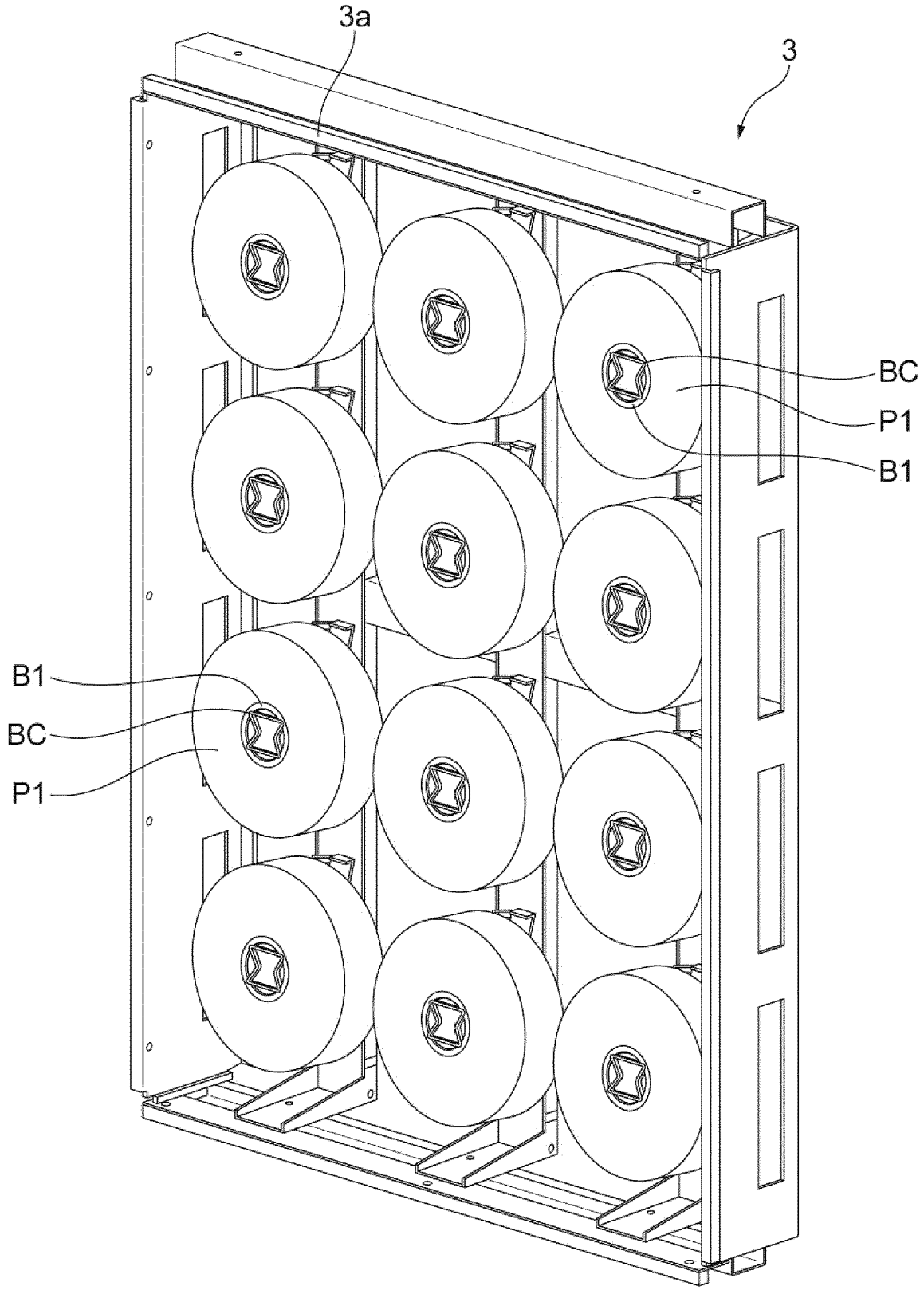

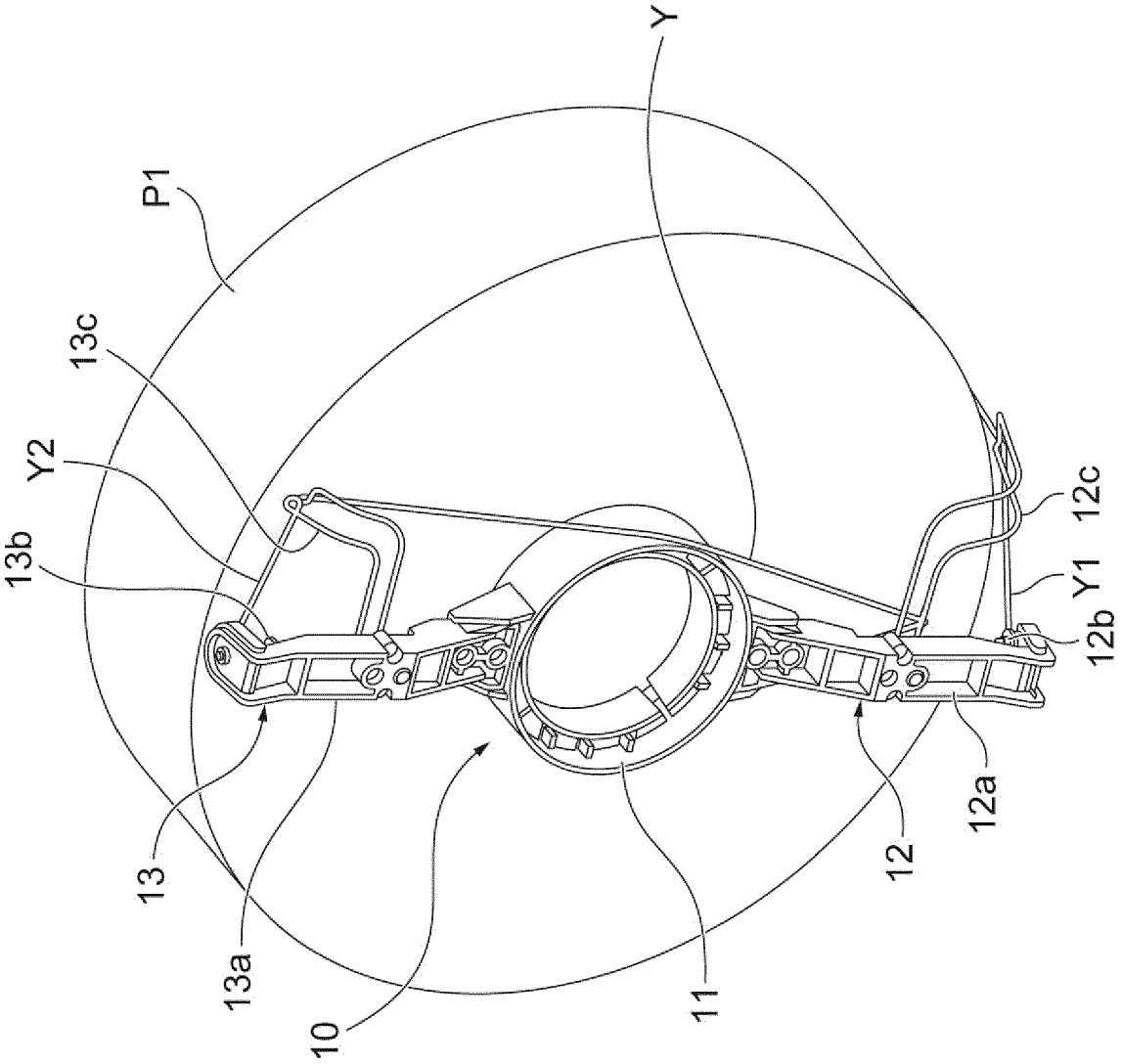

Fig.3

Fig.4

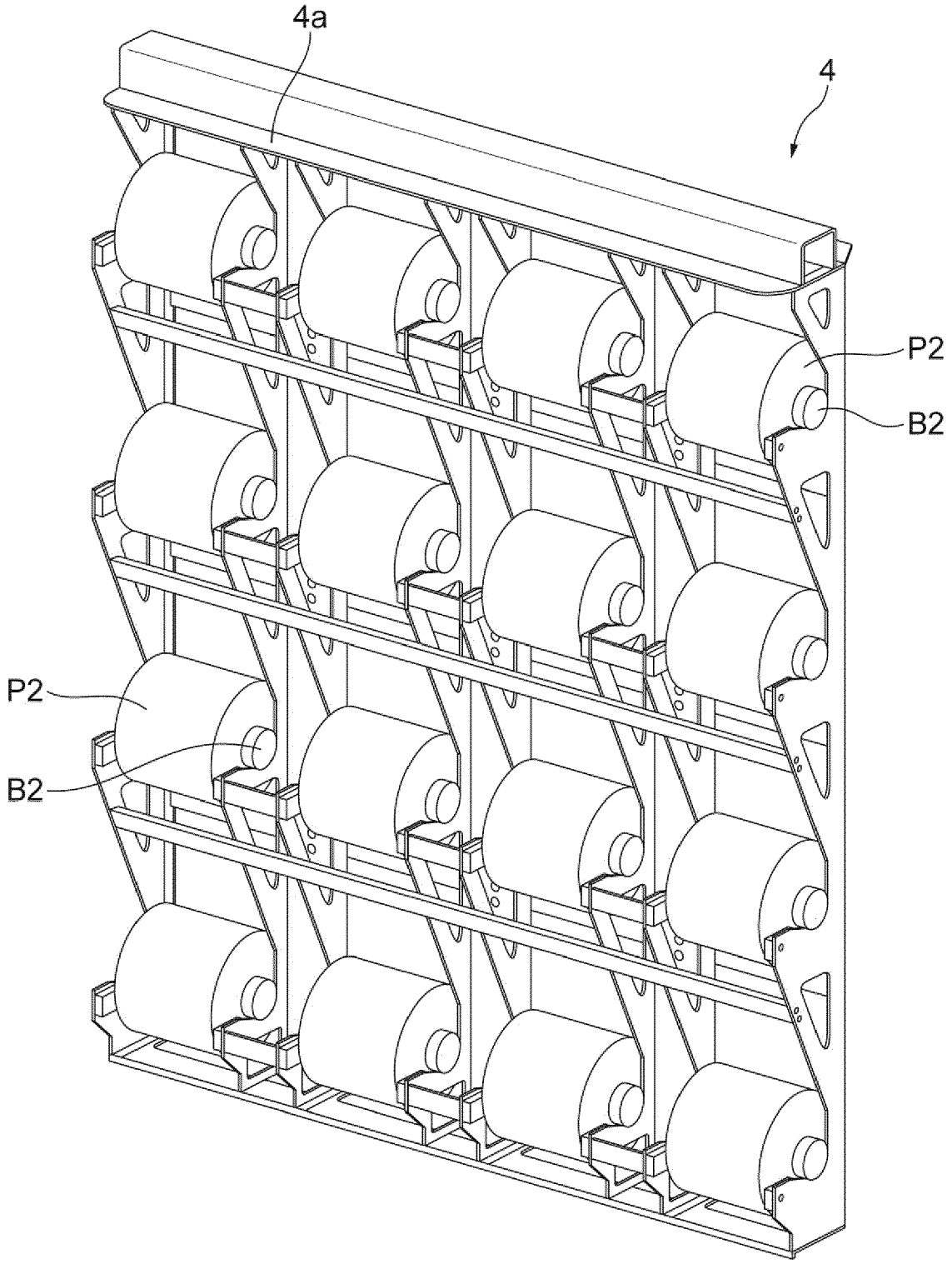

Fig.5

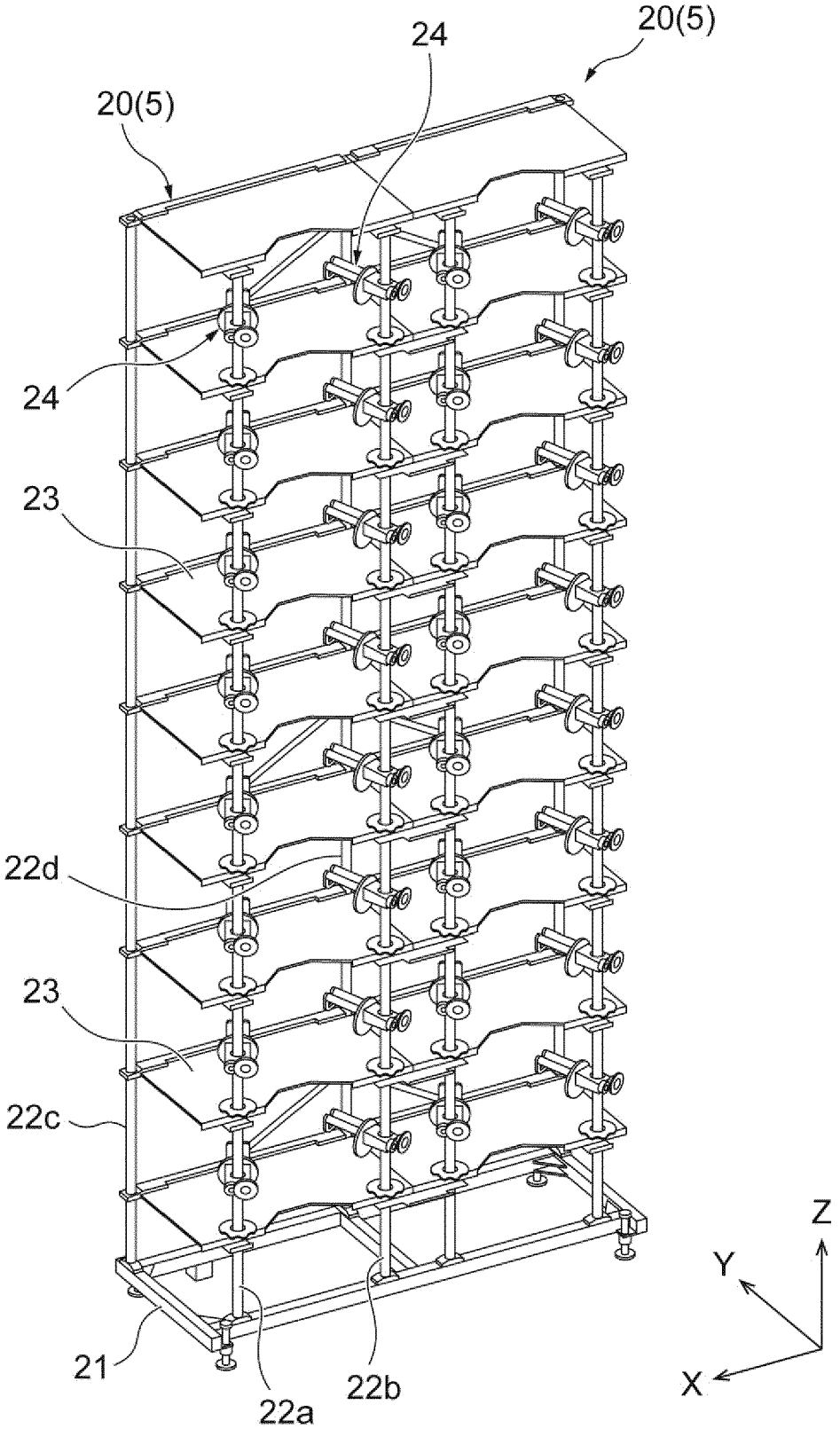

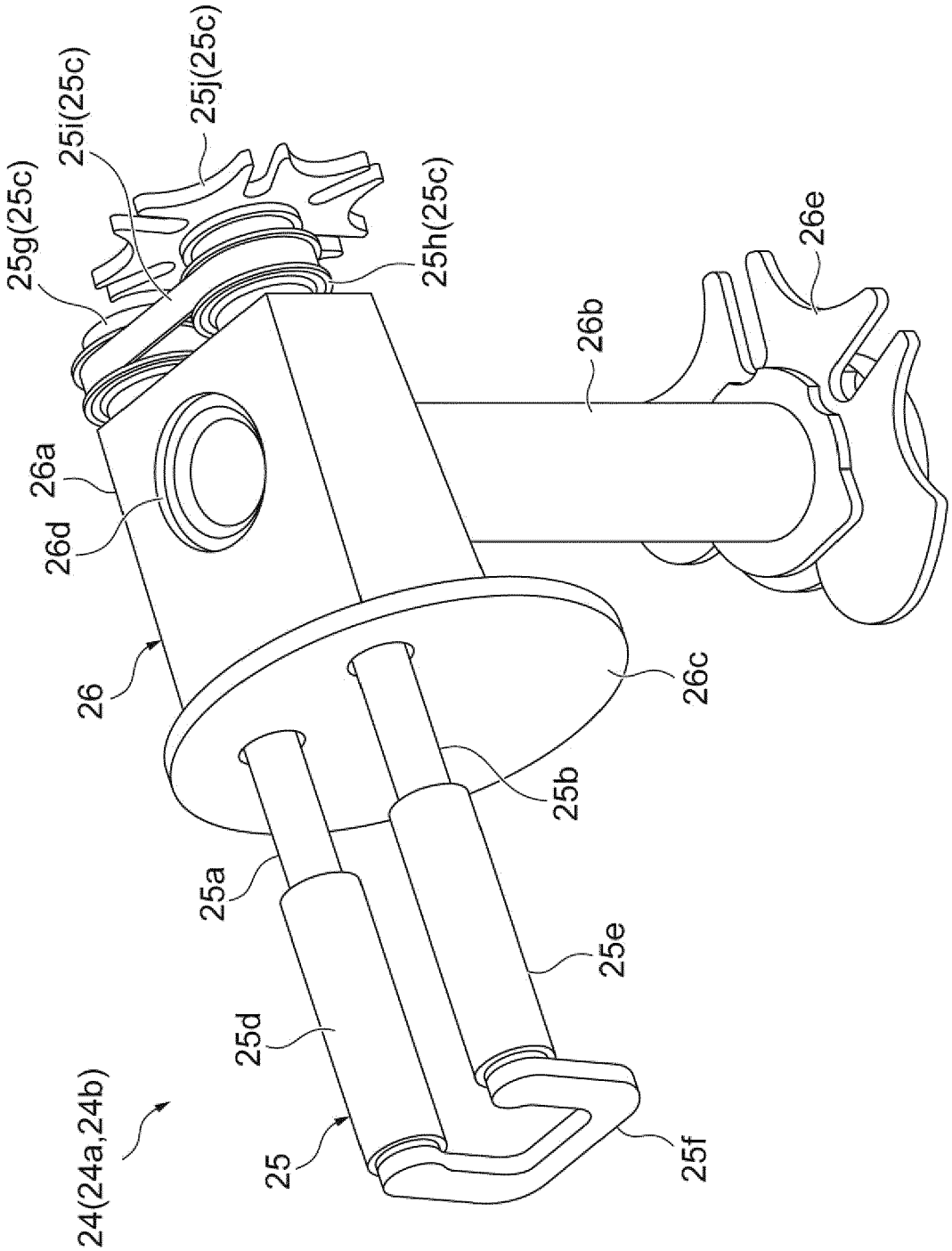
25g(25c)
25i(25c)
25j(25c)
25h(25c)
26e
26b
26a
26d
26
26c
25b
25a
25e
25d
24(24a,24b)
25
25f

Fig.6

Fig.7

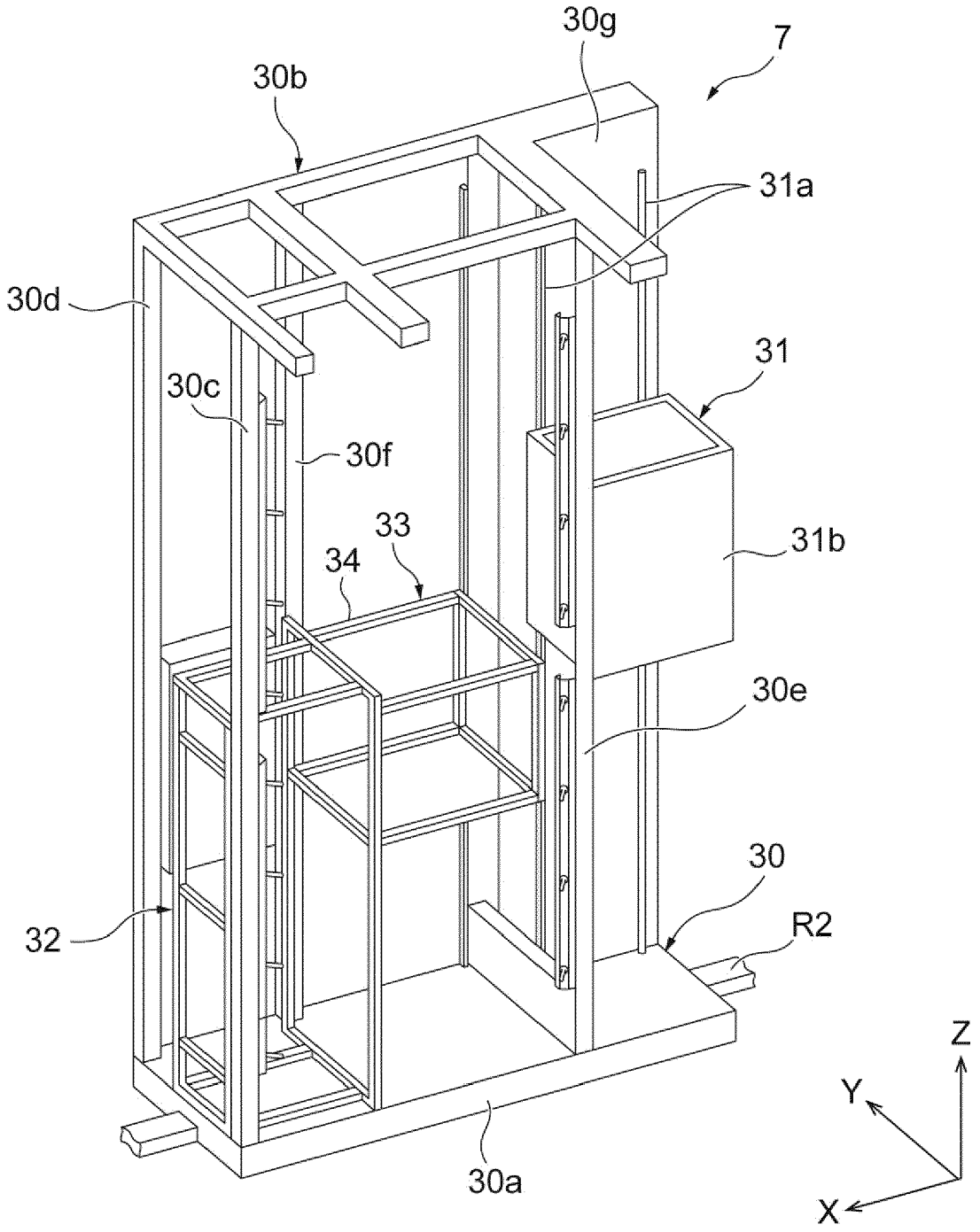

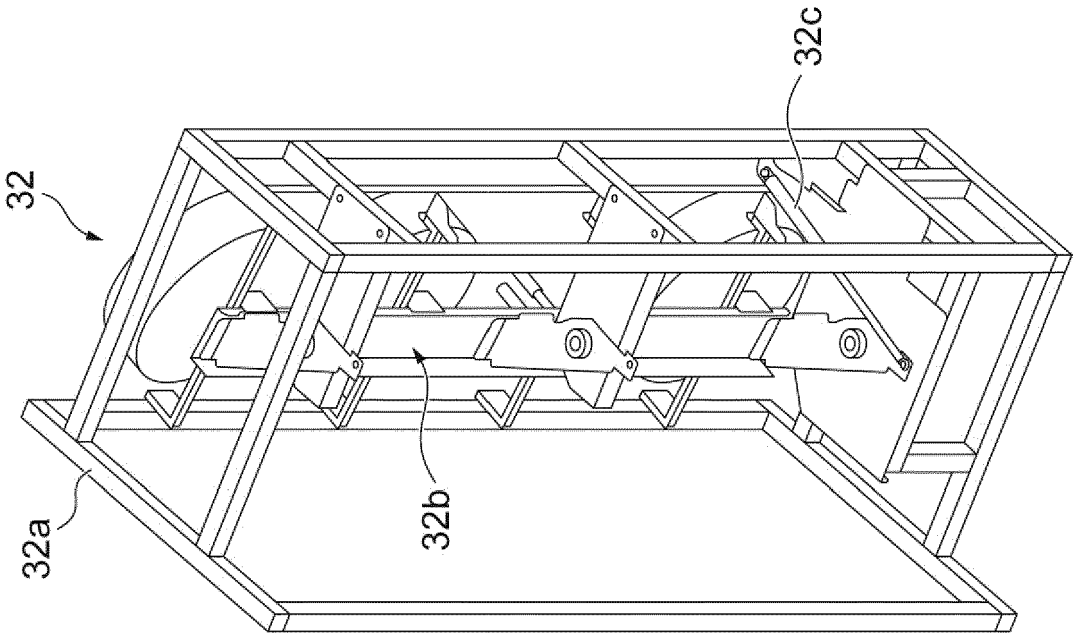

Fig.8B

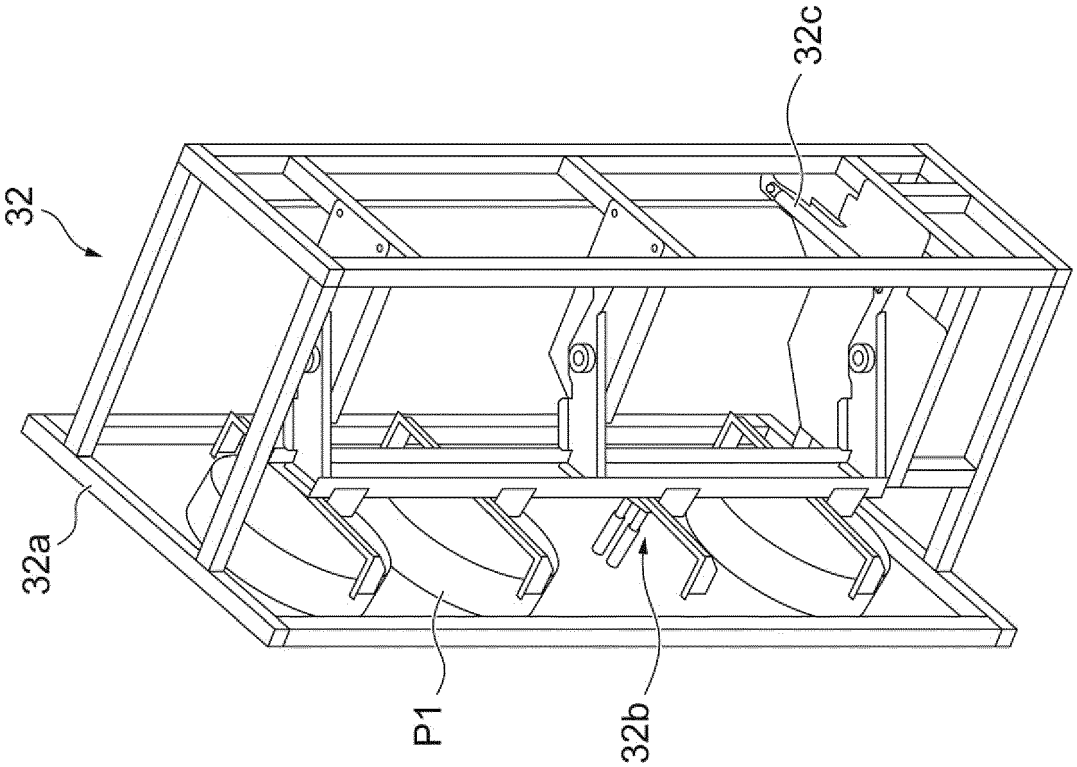

Fig.8A

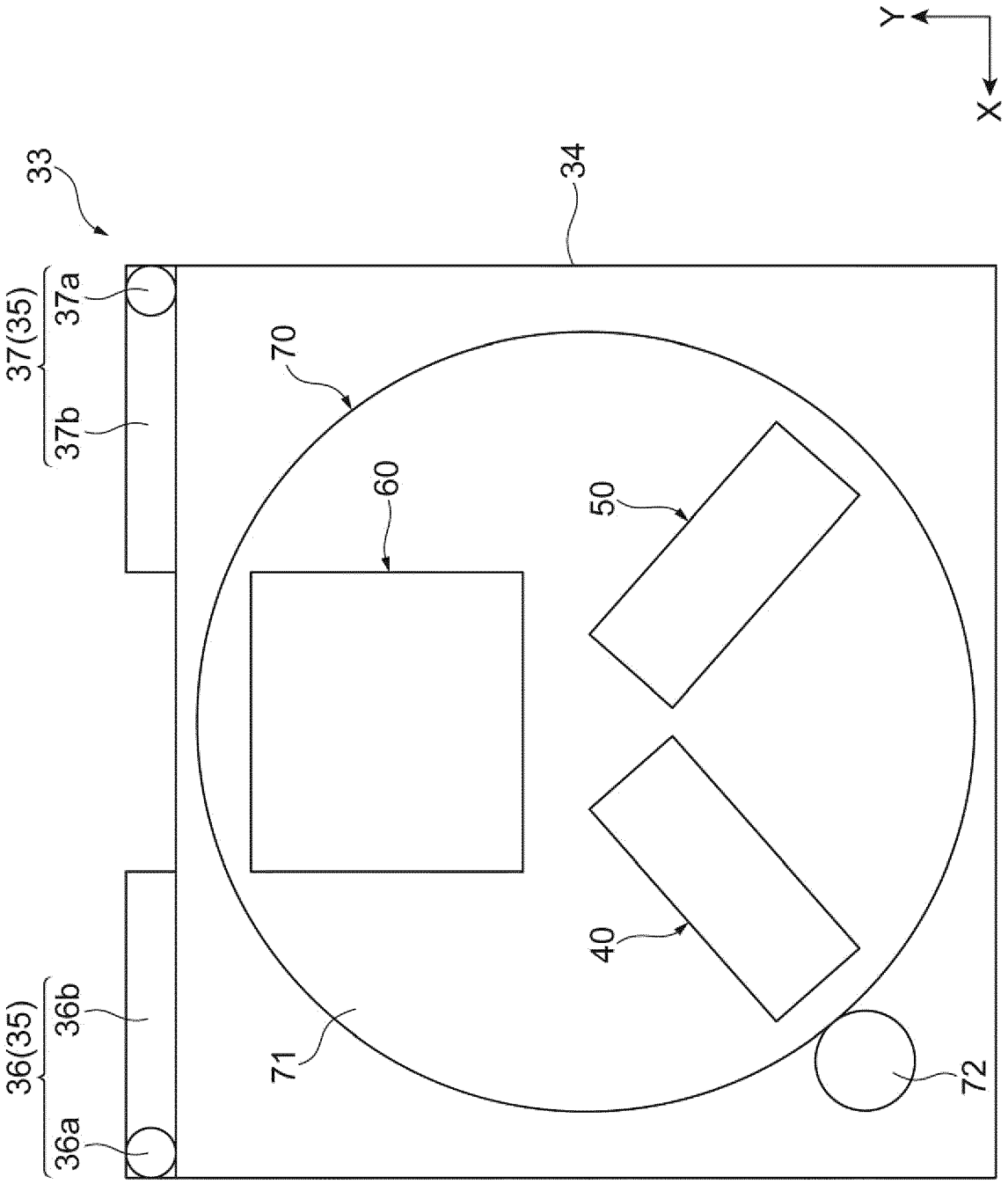

Fig.9

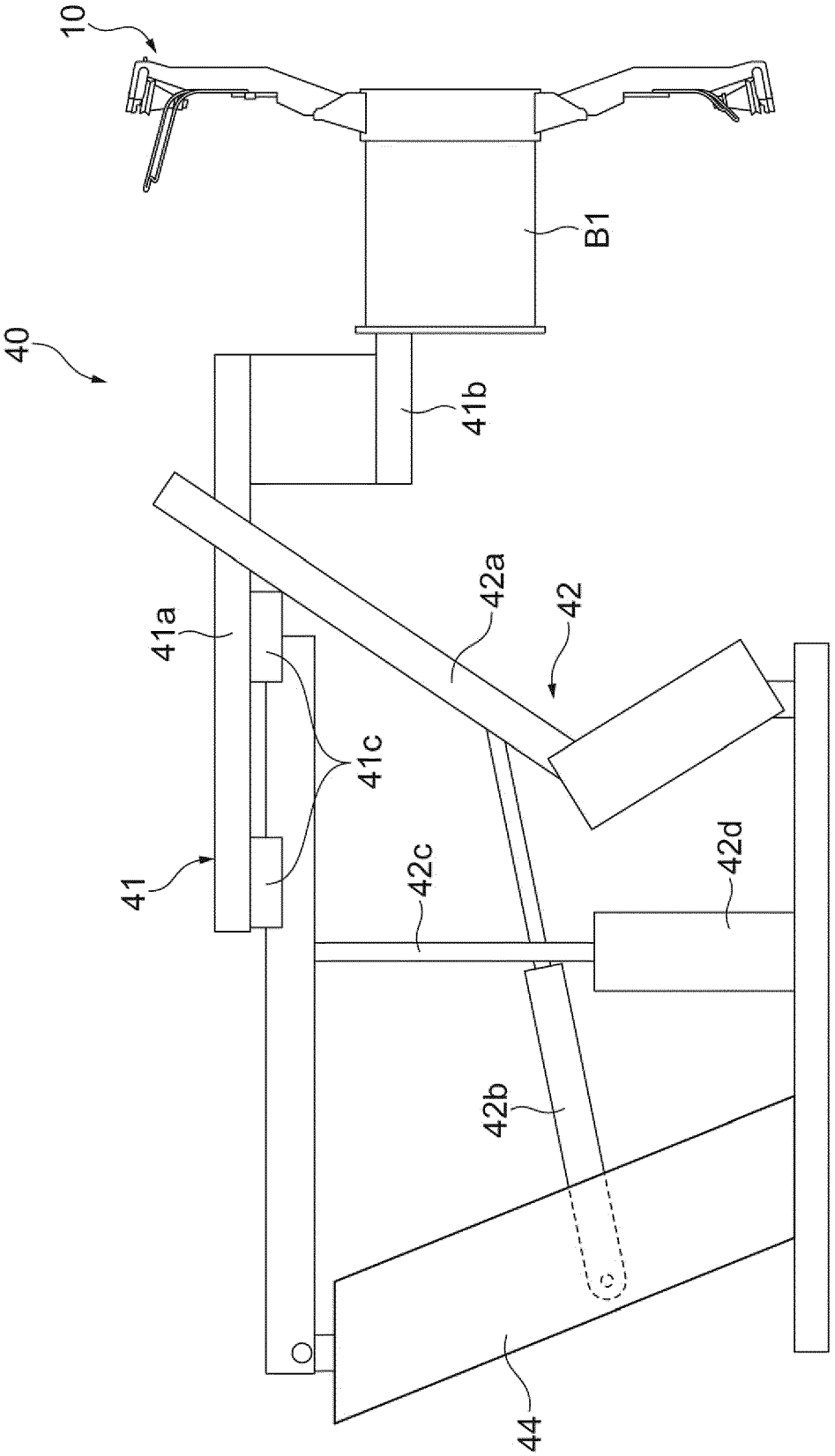

Fig.10

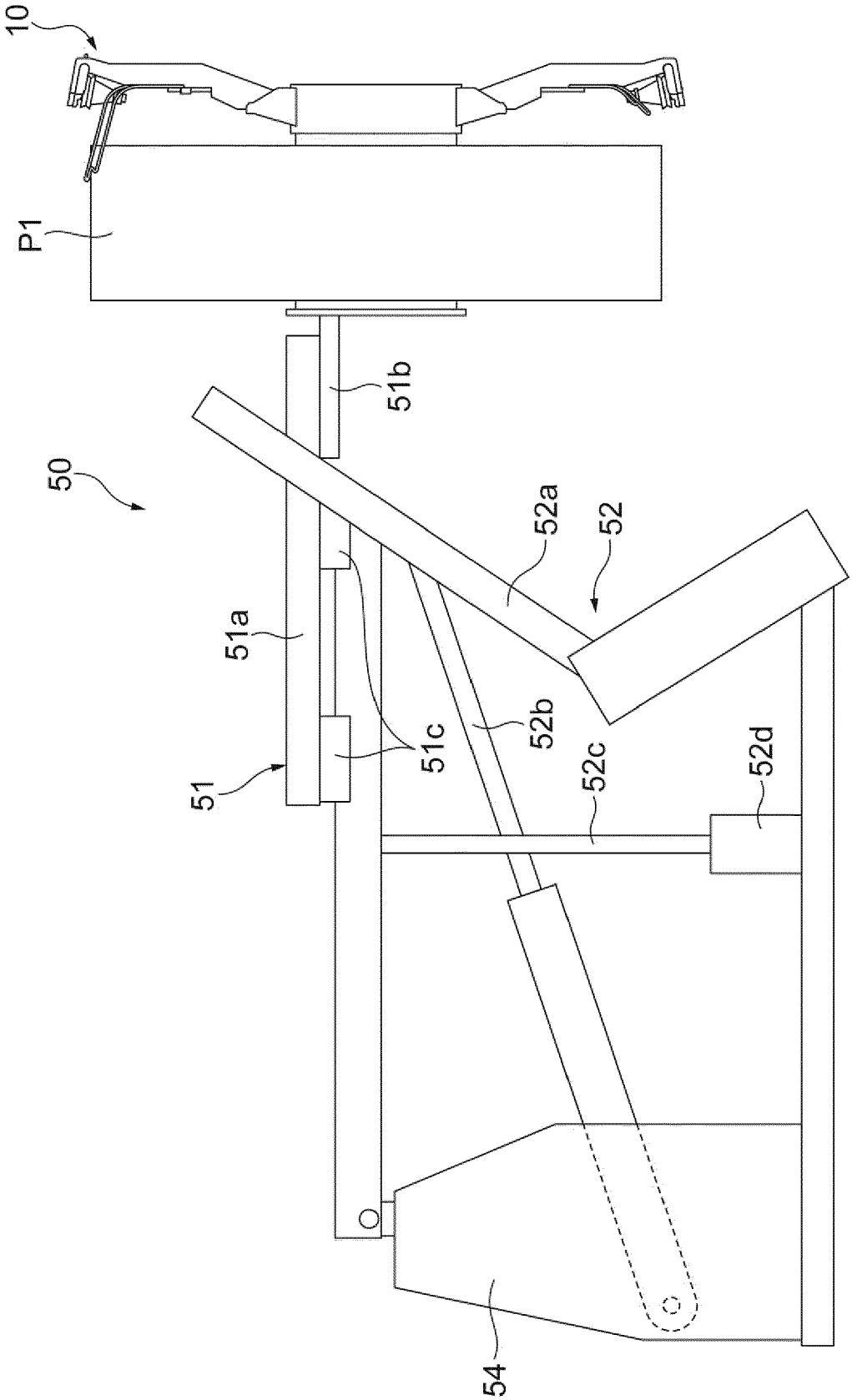

Fig.11

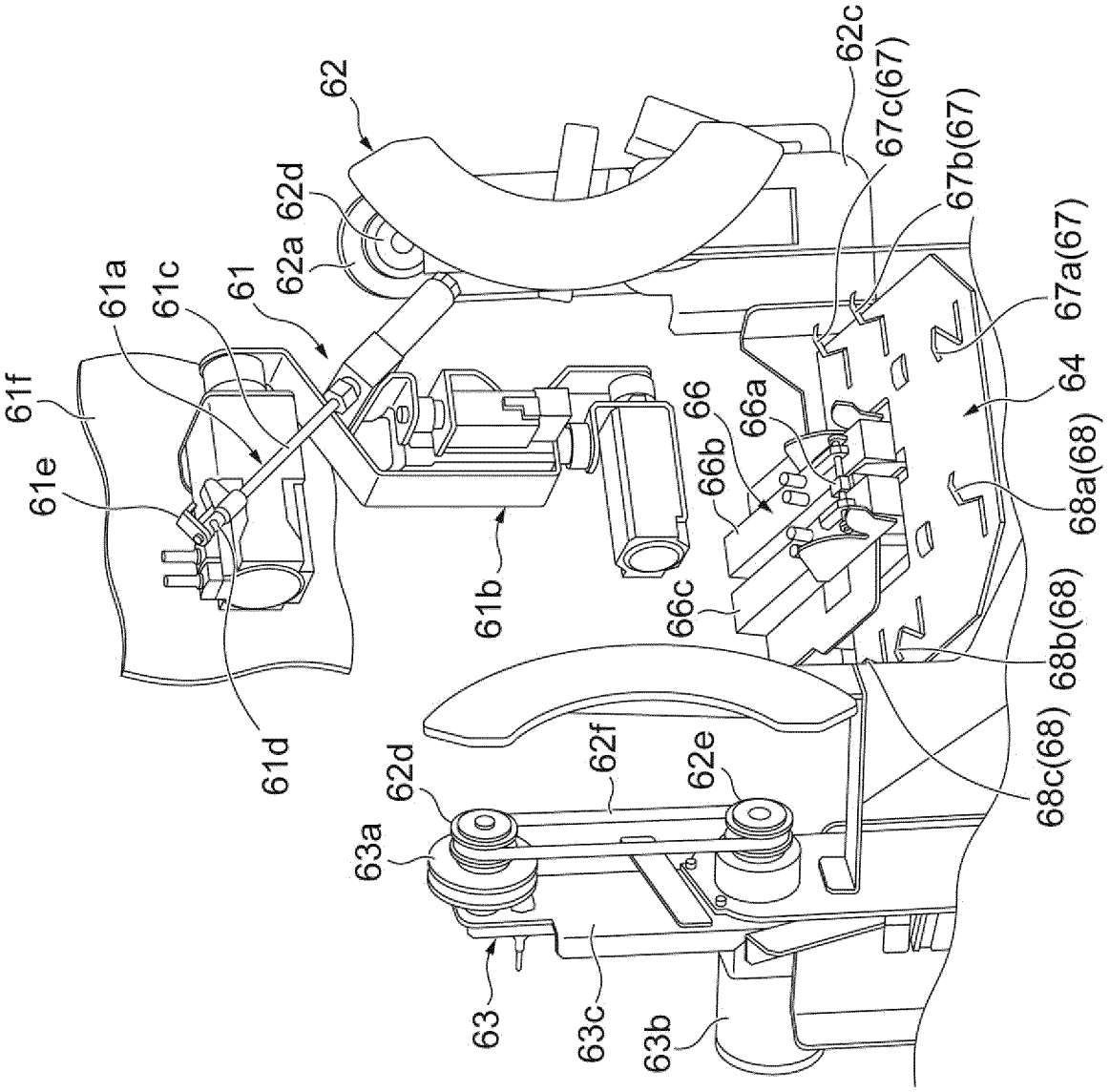
62
62a
62d
61
61a
61c
61f
61e
61d
61b
62c
67c(67)
67b(67)
67a(67)
64
66
66a
66b
66c
68a(68)
68b(68)
68c(68)
62d
62f
62e
63a
63
63c
63b

Fig.12

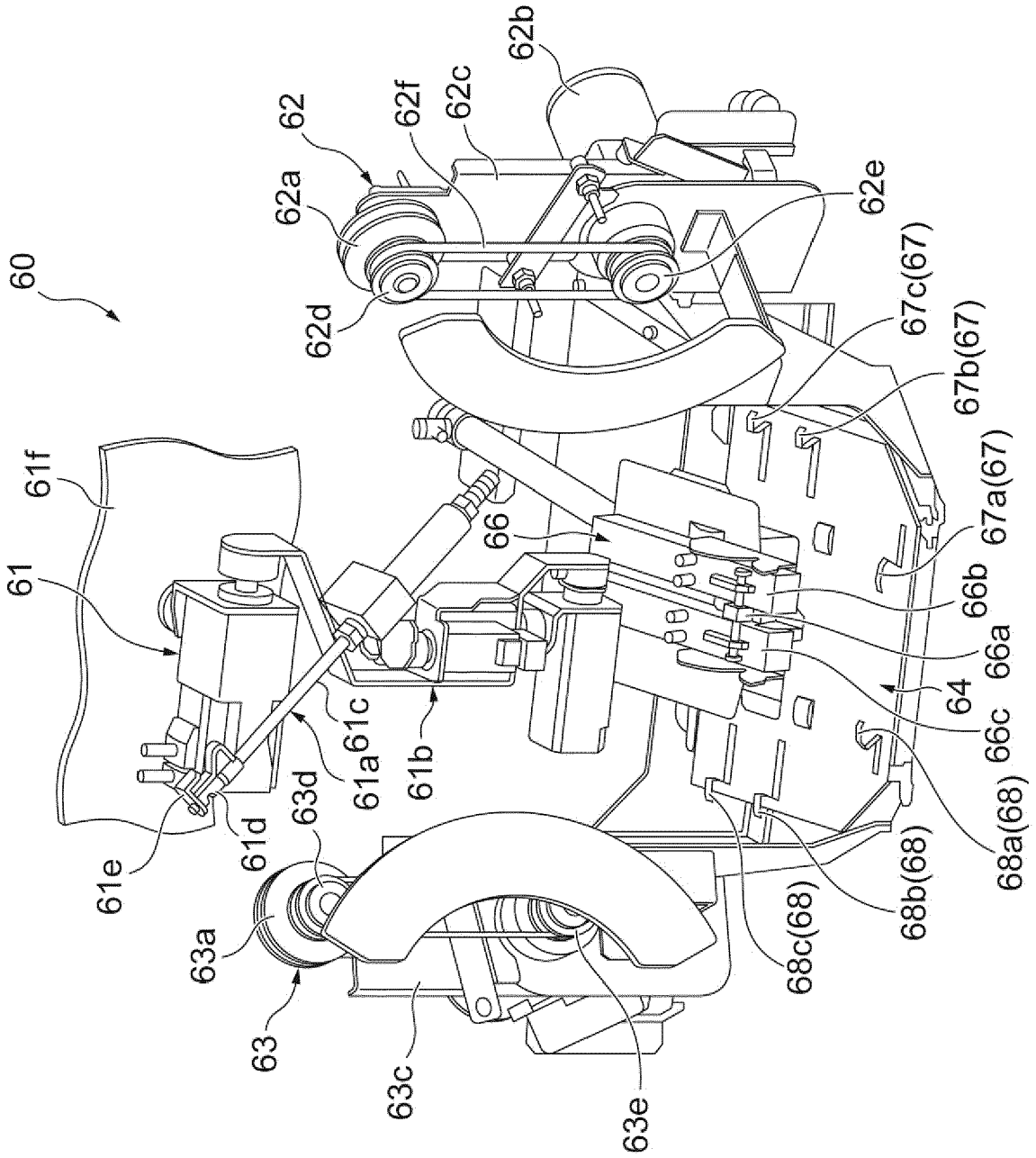
60
61
61f
61e
61d
61a
61c
61b
63d
63a
63
63c
63e
62
62a
62d
62f
62c
62b
62e
66
66b
66a
64
66c
67c(67)
67b(67)
67a(67)
68a(68)
68b(68)
68c(68)

Fig.13

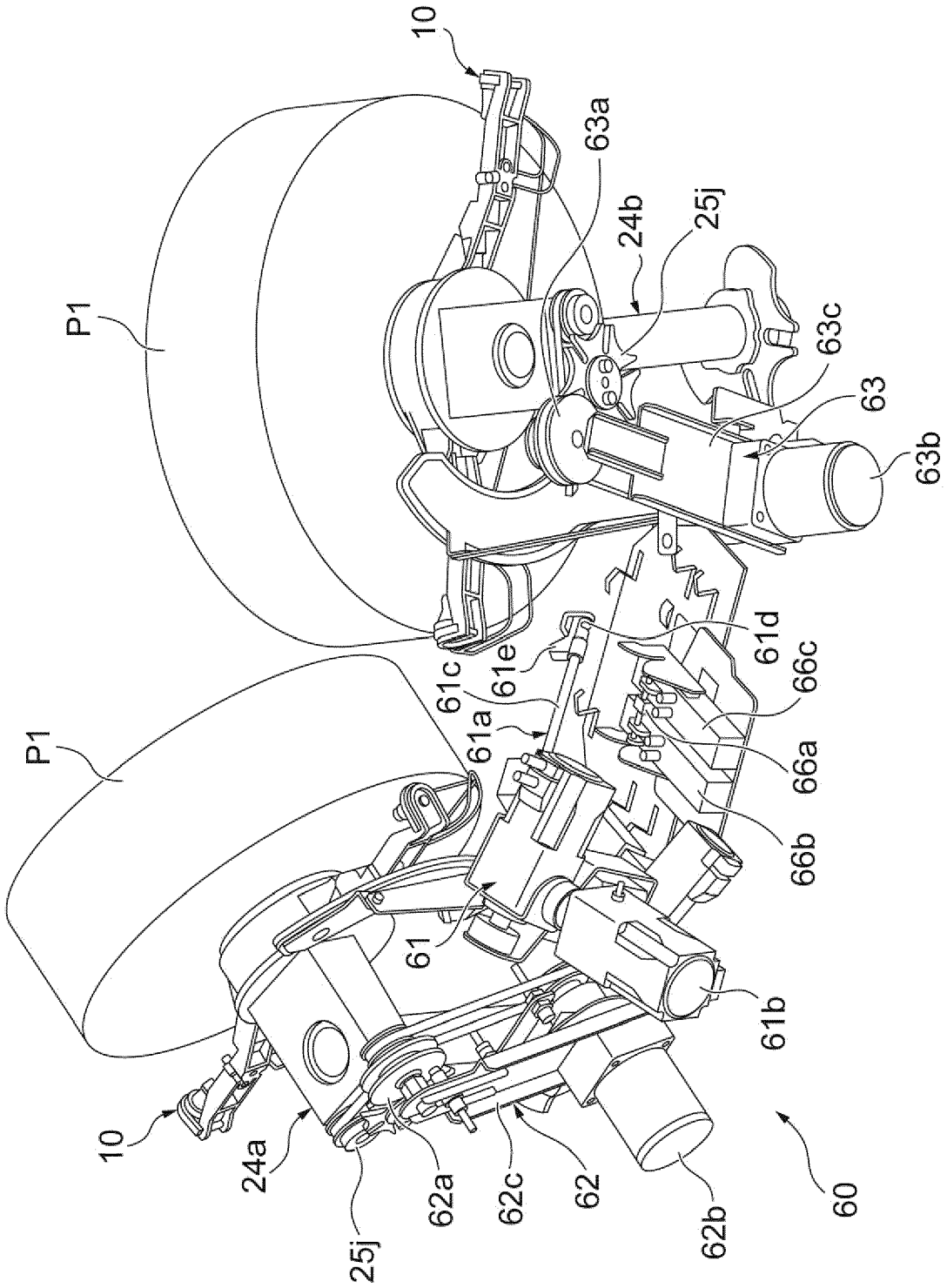
10
P1
P1
10
24a
25j
62a
62c
62
62b
60
61b
61
61a
61c
61e
61d
66c
66a
66b
63a
24b
25j
63c
63
63b

Fig.14

Europäisches Patentamt
European Patent Office
Office européen des brevets

EUROPEAN SEARCH REPORT

Application Number
EP 20 18 8118

DOCUMENTS CONSIDERED TO BE RELEVANT

Category	Citation of document with indication, where appropriate, of relevant passages	Relevant to claim	CLASSIFICATION OF THE APPLICATION (IPC)
X A	DE 43 44 786 A1 (MURATA MACHINERY LTD [JP]) 30 June 1994 (1994-06-30) * column 7, line 10 - column 8, line 33; figures * -----	1,2,4-7 3	INV. B65H49/12 B65H67/02 B65H69/06
X	US 2 673 576 A (RAYMOND DEWAS) 30 March 1954 (1954-03-30) * column 2, lines 1-12 * -----	1	
X	US 2 102 680 A (COCKER GEORGE B) 21 December 1937 (1937-12-21) * page 2, lines 13-50; figures * -----	1	
A	JP H06 61863 U (-) 2 September 1994 (1994-09-02) * paragraphs [0006], [0011]; figures * -----	1-7	

TECHNICAL FIELDS SEARCHED (IPC)

B65H
D01H

The present search report has been drawn up for all claims

Place of search	Date of completion of the search	Examiner
The Hague	23 November 2020	Lemmen, René

CATEGORY OF CITED DOCUMENTS

X : particularly relevant if taken alone
Y : particularly relevant if combined with another document of the same category
A : technological background
O : non-written disclosure
P : intermediate document

T : theory or principle underlying the invention
E : earlier patent document, but published on, or after the filing date
D : document cited in the application
L : document cited for other reasons
.....
& : member of the same patent family, corresponding document

1

EPO FORM 1503 03.82 (P04C01)

ANNEX TO THE EUROPEAN SEARCH REPORT ON EUROPEAN PATENT APPLICATION NO. EP 20 18 8118

This annex lists the patent family members relating to the patent documents cited in the above-mentioned European search report.
The members are as contained in the European Patent Office EDP file on
The European Patent Office is in no way liable for these particulars which are merely given for the purpose of information.

23-11-2020

Patent document cited in search report	Publication date	Patent family member(s)	Publication date
DE 4344786 A1	30-06-1994	DE 4344786 A1	30-06-1994
		IT 1266471 B1	30-12-1996
		JP 3031092 B2	10-04-2000
		JP H06200434 A	19-07-1994
US 2673576 A	30-03-1954	NONE	
US 2102680 A	21-12-1937	NONE	
JP H0661863 U	02-09-1994	NONE	

EPO FORM P0459

For more details about this annex : see Official Journal of the European Patent Office, No. 12/82

REFERENCES CITED IN THE DESCRIPTION

This list of references cited by the applicant is for the reader's convenience only. It does not form part of the European patent document. Even though great care has been taken in compiling the references, errors or omissions cannot be excluded and the EPO disclaims all liability in this regard.

Patent documents cited in the description

- JP H6200434 B **[0002]**
- JP S5218917 B **[0003]**