(19) Europäisches Patentamt
European Patent Office
Office européen des brevets

(11) Publication number: **0 374 239 B1**

(12) # EUROPEAN PATENT SPECIFICATION

(45) Date of publication of patent specification: **10.11.93**

(51) Int. Cl.[5]: **H01R 43/28**, H01R 23/66

(21) Application number: **89906969.4**

(22) Date of filing: **22.05.89**

(86) International application number:
PCT/US89/02199

(87) International publication number:
WO 89/12336 (14.12.89 89/29)

(54) **FLAT CABLE TERMINATING APPARATUS.**

(30) Priority: **02.06.88 JP 136003/88**

(43) Date of publication of application:
27.06.90 Bulletin 90/26

(45) Publication of the grant of the patent:
10.11.93 Bulletin 93/45

(84) Designated Contracting States:
CH DE FR GB IT LI

(56) References cited:
EP-A- 0 041 816
EP-A- 0 232 958
EP-A- 0 244 123
DE-A- 2 542 743
DE-A- 2 806 945

(73) Proprietor: **THE WHITAKER CORPORATION**
Suite 450,
4550 New Linden Hill Road
Wilmington, Delaware 19808(US)

(72) Inventor: **TANAKA, Hiromi Kanwa Haimu 202**
6-7, Ogawa 4-chome
Machida-shi
Tokyo(JP)
Inventor: **OSAKA, Tadashi Park City Shin-Kawasaki E911**
1, Ogura 1-chome
Saiwai-ku
Kawasaki-shi
Kanagawa(JP)

(74) Representative: **Klunker . Schmitt-Nilson . Hirsch**
Winzererstrasse 106
D-80797 München (DE)

Note: Within nine months from the publication of the mention of the grant of the European patent, any person may give notice to the European Patent Office of opposition to the European patent granted. Notice of opposition shall be filed in a written reasoned statement. It shall not be deemed to have been filed until the opposition fee has been paid (Art. 99(1) European patent convention).

Rank Xerox (UK) Business Services
(3.10/3.6/3.3.1)

Description

The present invention relates to an apparatus for preparing a flat electrical cable by accurately aligning and arranging electrical conductors of the cable for electrical connection to electrical contacts of an electrical connector.

Conventional electrical connectors are used to electrically connect and disconnect electrical circuits. The connectors are of the type that have signal and ground contacts which are electrically connected to signal and ground conductors of flat transmission cables thereby forming cable assemblies that are widely used.

In order to electrically connect the signal and ground conductors of the flat transmission cable to the signal and ground contacts of the connector, the cable must be prepared so that the signal and ground conductors are in position to effect the electrical connections with the signal and ground contacts. The diameters of the conductors are very small and they are spaced closely together. Technicians using microscopes manually prepared the cables by positioning and bending the conductors for connection to the signal and ground contacts of the connectors. This resulted in low production and conductor positioning tended to be uneven. The reliability of the connector was therefore effected by these factors.

Document EP-A-0 232 958 discloses a nipping and knuckling machine comprising a optics assembly which allows to check the position of a support table on which a cable is mounted, with respect to nipping and kuckling arrangements.

It is an object of the present invention to provide an apparatus that overcomes the above drawbacks and accurately aligns conductors of a flat cable and arranges them for electrical connection to electrical contacts of an electrical connector.

An apparatus for preparing an end of a flat electrical cable for aligning, cutting and bending electrical conductors of the cable for electrical connection to electrical contacts of an electrical connector comprises a clamp including a base, a movable clamping section in which the flat cable is to be mounted is positioned on the base, and a locking section for locking the clamping section in position on the base; a clamp-positioning device including a sensing member for sensing a first conductor of exposed conductors of the cable between a jacket and a front end jacket, a lock release device for releasing the locking section, and a clamp-moving device is operated if the first conductor is not in alignment with the sensing member to move the clamping section along the base after the locking section has been released by the lock release device until the first conductor is in alignment with the sensing member whereafter the lock release device permits the locking section to lock the clamping section on the base; and a conductor-aligning, cutting and bending device including a conductor-aligning device for clamping onto the front end jacket, a conductor-detecting device for detecting the first conductor, the conductor-aligning device being operated if the first conductor is out of alignment with the conductor-detecting device to move the front end jacket until the first conductor is detected by the conductor-detecting device, comb members having teeth, a comb-moving device for moving the comb members so that the conductors are positioned between, the teeth thereby spacing and aligning the conductors, and a conductor-cutting and bending device for cutting the conductors and bending them.

The invention, together with objects and advantages thereof, is best understood by way of example with reference to the following detailed description in conjunction with the accompanying drawings.

Figures 1A-1C are respectively a top plan view, a front elevational view and a side view showing a cable clamp for a flat electrical cable.

Figure 2 is an exploded perspective view of a clamp-positioning device for positioning the cable clamp to which a stripped flat cable is clamped so that the cable conductors will be positioned for electrical connection to the contacts of an electrical connector.

Figure 3 is an exploded perspective view of a conductor-aligning, cutting and bending device for aligning, cutting and bending the cable conductors for electrical connection to the connector contacts.

Figures 4-11 are diagramatic views showing the essential components of the device of Figure 3 for aligning, cutting and bending the cable conductors.

Figure 12 is a part perspective view showing a partly stripped end of a flat electrical cable before being processed to align, cut and bend the conductors.

Figure 13 is a view similar to Figure 12 showing the prepared end of the cable with the conductors being aligned, cut and bent for electrical connection to the connector contacts.

As shown in Figure 12, a front end 3 of flat electrical cable 5 has a section 4 of insulation jacket 2 stripped exposing horizontally-aligned electrical conductors 1 extending between jacket 2 and jacket 2a that has been left on the ends of the conductors.

Figure 13 shows the prepared end of cable 5 after the conductors have been spaced and bent by the apparatus of the present invention so that they can be electrically connected to electrical contacts of an electrical connector. Conductors 1

include signal conductors 1a in a plane and ground conductors 1b with outer sections being bent and disposed in another plane parallel to the plane of the signal conductors 1a while the inner sections of the ground conductor 1b are in the same plane of the signal conductors 1a.

Cable clamp 10 is shown in Figures 1A-1C and includes a base 11, cable-clamping section 12 mounted on base 11 and a locking section 13. Cable-clamping section 12 has a lower plate 14 and upper plate 15 between which flat cable 5 is clamped.

Upper plate 15 is pivotally mounted onto lever 16 which is pivotally on lower plate 14 via pin 17 enabling it to move between an open position and a latched position, as shown in Figure 1B. Spaced holes 16a are located in an upper surface of lever 16.

A latch member 18 latches lever 16 in a latched position, as shown in Figure 1B, and is pivotally mounted by pin 19 to lower plate 14 so that it can stay in a latched position by a spring 19a biasing hook 18b into engagement with the free end of lever 16. The outer surface of hook 18b is tapered and so is the front surface of the free end of lever 16 which when engaging one another moves latch member 18 against the bias of spring 19a causing hook 18b to latchably engage the free end of lever 16 when these tapered surfaces clear one another so that spring 19a biases hook 18b onto lever 16 thereby latching it in its latched position. This clamps cable 5 between plates 14, 15 with section 6 including stripped section 4 of cable 5, as shown in Figure 2, extending forwardly of clamping section 12. Arm 18a is secured to pin 19 and is movable in a clockwise direction to move hook 18a free of the free end of lever 16 against the bias of spring 19a to unlatch lever 16 to position cable 5 in clamp 10 and remove it therefrom.

Projection 14a extends outwardly from the bottom surface of plate 14 and is disposed in channel 11a of base 11 enabling clamping section 12 to move back-and-forth along base 11. Projection 14b extends outwardly from a rear surface of plate 14 for engagement by locking device 13 to maintain clamp 12 in position on base 11.

Locking section 13 includes a plate 13a that is mounted on base 11. An L-shaped lever 21 is secured to one end of a shaft 21a that is rotatably mounted in plate 13a. The other end of shaft 21a is connected to one end of a torsion spring 20 which has its other end mounted to plate 13a. An engaging member 22 is secured onto shaft 21a within a slot of plate 13a and pressingly engages projection 14b in its normal position to maintain clamping section 12 at a selected position. To release member 22 from projection 14b, a downward force is applied to the free end of lever 21 causing shaft 21a to move in a counter-clockwise direction against the torsional spring force of spring 20 which moves member 22 upwardly free of projection 14b thereby enabling clamping section 12 to move in the directions of arrows D, E along base 11, as shown in Figure 2.

Cable clamp 10 with the stripped end 6 of cable 5 clamped therein, is engaged by a pawl 31 of a conveying device 30 which moves in the direction of arrow A thereby moving clamp 10 and cable 5 to the clamp-positioning station at which the clamp and cable are stopped by an arm of a pivotaly-mounted lever 32 and at which a clamp-positioning device 100 is located, as shown in Figure 2. Cylinder 101 is operated causing a light-sensing member 102 to move in the direction of arrow B until it detects the first conductor 1c of exposed conductors 1. If cable 5 has been correctly positioned in clamping section 12 and clamping section 12 is correctly positioned along base 11 as detected by sensing member 102, no adjustment of the clamping section 12 is necessary because conductors 1 are correctly positioned for termination to the respective termination sections of the electrical connector. This being the case, cylinder 33 is operated causing the shaft connected to the piston thereof to move which pivots lever 32 freeing clamp 10 enabling pawl 31 and conveying device 30 to move the clamp 10 and stripped cable 5 to the conductor-aligning, cutting and bending device 200 of Figure 3 which will be described later on.

If conductor 1c has not been detected by sensing member 102 after cylinder 101 has moved sensing member 102 to its selected position, cylinder 111 of lock release device 110 is operated thereby moving cylinder 112 and rod 113 in the direction of arrow C until end 113a of rod 113 is aligned with lever 21 of locking section 13. Cylinder 112 is operated moving rod 113 downwardly causing end 113a to engage lever 21 and push it downwardly freeing engaging member 22 of locking section 13 from projection 14b enabling clamping section 12 and cable 5 to be moved along base 11 in the directions of arrows D, E.

Cylinder 121 of clamp-moving device 120 is operated thereby moving cylinder 122 and plate 123 outwardly from block 127 along parallel rods until plate 123 overlies lever 16 of clamping section 12. Cylinder 122 is operated moving plate 123 downwardly whereby pins 123a are inserted into holes 16a of lever 16 of clamping section 12. Pins 123a are smaller in diameter than holes 16a so that accurate positioning is unnecessary.

Reversible electric motor 124 is operated to drive a pulley and belt drive 125 thereby rotating drive screw 12b that engages threads in block 127 to drive it back and forth along drive screw 126 in

accordance with the direction of operation of motor 124.

Micro switches 128a, b, c are positioned between sensing member 102 and block 127 with switch 128a in the center and aligned with the position of sensing member 102 when it is moved by cylinder 101 to its conductor 1c sensing position. A projection 127a extends downwardly from the bottom surface of block 127 and activates switches 128a, b, c. These switches can be light-sensing devices, if desired.

If conductor 1c is to the left of switch 128a and motor 124 is driving block 127 towards switch 128b thereby driving clamping section 12 and cable 5 in the direction of arrow D, projection 127 will operate switch 128b when it arrives at switch 128b thereby reversing the operation of motor 124 causing drive screw 126 to drive block 127 and clamping section 12 and cable 5 in the direction of arrow E until projection 127a engages and operates switch 128a thereby stopping motor 124 and any further movement of block 127 and clamping section 12 and conductor 1c is aligned with sensing member 102.

If conductor 1c is to the right of switch 128a, the cable-moving device 120 operates opposite to that described above by driving clamping section 12 and cable 5 in the direction of arrow E until switch 128c is operated whereupon clamping section 12 and cable 5 are driven in the direction of or arrow D until switch 128a is operated thereby stopping motor 124.

At this position, cylinders 122, 121, 112 and 111 are operated releasing cable-moving device 120 from clamping section 12 and lock release device 110 from lever 21 which causes engaging member 22 to engage projection 14b thereby maintaining clamping section 12 and cable 5 at this position on base 11. Cylinder 33 is operated moving lever 32 free of clamp 10 so that pawl 31 and conveying device 30 can move clamp 10 and aligned cable to conductor-aligning, cutting and bending device 200 of Figure 3.

As shown in Figure 3, cable 5 is moved via clamp 10 and conveying device 30 (both of which has been omitted from Figure 3 so as not to include subject matter already disclosed and deemed unnecessary) to a stop position such as pivoted lever 32 of Figure 2. Cylinder 211 is operated of conductor-aligning device 210 thereby moving plate 211a on which electric motor 212, cylinder 213, plate 213a, clamping members 214 and rail 219 are mounted along rail 215 in the direction of arrow F until jacket 2a of cable 5 is positioned in opening 216 between clamping members 214. Cylinder 213 is operated causing its shaft to engage the bottom clamping member 214 that is pivotally mounted to the upper clamping member 214 thereby clamping insulation jacket 2a between clamping members 214, as shown in Figures 5B and 8-10.

Reversible electric motor 231 of conductor detection device 230 is operated to drive drive screws 233, 234 via a belt 232 engaging pulleys on the motor shaft and drive screws 233, 234. Threads 233a, 234a of drive screws 233, 234 threadably engage threads in blocks 235, 236. Thus, when motor 231 operates, blocks 235, 236 move in the directions of arrows G, H in accordance with the rotatorial direction of operation of motor 231.

Light-transmitting member 237 is mounted on block 235 whereas light-receiving member 238 is spaced from and in alignment with light-transmitting member 237 and is mounted on block 236. Members 237, 238 form a detecting device to detect the presence of conductors 1 of cable 5. Projection 235a is located on an upper surface of block 235 and activates central microswitch 239 and microswitches 240, 241 spaced to the left and right of switch 239. Switches 239, 240, 241 in conjunction with projection 235a detect the position of members 237, 238 as they move in the directions of arrows G, H.

Figures 4-11 in conjunction with Figure 3 show the operations involved to adjust the conductor spacings of cable 5 and to bend certain conductors so that the conductors are in proper position for termination to the termination sections of electrical contacts of an electrical connector.

Figure 4 is a front elevational view of multiple comb members 250, electrical conductors 1 of cable 5 and light-transmitting member 237 and light-receiving member 238 which are seen from the direction of arrow X of Figure 3. In Figure 4, five conductors 1 starting with conductor 1c are a single unit and the first conductor of each unit are detected by the detecting device 237, 238 and comb members 250a, 250b...250n are associated with each unit of five conductors of cable 5 to accurately position them if they are misaligned.

Motor 231 operates thereby moving detecting device 237, 238 in the direction of arrow G. If conductor 1c is in its correct position corresponding to switch 239, detecting device 237, 238 is stopped. Figures 5A, 5B are views looking in the directions of arrows X and Y of Figure 3 showing the front and side views of comb members 250, detecting device 237, 238 detecting conductor 1c, conductors 1, cable 5 and clamping members 214 clamped onto jacket 2a.

When conductor 1c has been detected by detecting device 237, 238, as indicated in Figure 5A, cylinder 261 of the comb drive device 260 is operated thereby moving link 262 in the direction of arrow I, as shown in Figure 3, whereby rod 263 is moved causing cam 264a to move about 30 degrees in the direction of arrow J. Cam 264a moves

comb member 250a downward so that conductors 1 are received between teeth 251a at the bottom of comb member 250a, as shown in Figure 6. Cylinder 261, link 262 and rod 263 return to their original positions by movement of link 262 in the direction of arrow K. Teeth 251a uniformly space the five conductors of this unit.

If conductor 1c is not at its correct position so that detecting device 237, 238 does not detect it, then conductor 1c is adjusted in the following manner. Motor 212 is operated thereby rotating eccentric cam 217 which is mounted on the shaft of motor 212. Cam 217 engages one of the legs of a U-shaped member 218, which is secured to a plate 213a on which cylinder 213 and clamping members 214 are mounted, thereby moving plate 213a along track 219 in the directions of arrows L or M. This also moves jacket 2a and the front end of cable 5 in the same direction thereby moving conductor 1c and the other conductors of this unit until conductor 1c is detected by the detecting device 237, 238 and motor 212 stops. Comb member 250a is then moved downward so that the conductors of this unit are positioned between teeth 251a as described above.

In order to operate motor 212 so that plate 213a moves in the direction of arrow L or M, a disc 220 is mounted on the shaft of motor 212 and the position of notch 220a of disc 220 detected by photoelectric device 221 will determine which direction motor 212 will operate to move the front end of cable 5 so that conductor 1c is detected by the detecting device 237, 238.

Motor 231 then operates to move the detecting device 237, 238 to detect the next first conduct 1d of the next unit of five conductors, as shown in Figure 7. If conductor 1d is correctly positioned, comb member 250b is operated as heretofore described so that these conductors are positioned between teeth 251b of comb member 250b. If, on the other hand, conductor 1d is incorrectly positioned, then the front end of cable 5 is moved in the direction of arrows L or M, as heretofore described whereafter the conductors are positioned between the teeth 251b of comb member 250b.

The other units of conductors are processed in like manner until all the conductors are positioned between the teeth 251 of the comb members 250 which are maintained in their down positions by cams 264. Cylinder 271 of conductor-cutting and bending device 270, as shown in Figure 3, is operated and the upper surface 272a of member 272 is raised in the direction of arrow N until surface 272a engages conductors 1, as shown in Figure 8. Cylinder 291 of comb drive device 290, as shown in Figure 3, is operated thereby moving lower comb member 280 upwardly in the direction of arrow O so that conductors 1 are positioned between teeth 281 of comb member 280; the teeth 281 being the same number of teeth 251 of comb members 250 so that conductors 1 are supported between comb members 250 and comb member 280 and the spacings are maintained therebetween on each side of member 272, as shown in Figure 9.

Cylinder 273 of conductor-cutting and bending device 270, as shown in Figure 3,is next operated and block 273a to which upper member 274 is mounted is moved downwardly while being guided along spaced parallel rods 275. Conductor-bending and cutting-member 274 includes cutting member 274a which along with an edge of upper surface 272a cuts conductors 1 and bending member 274b which has teeth that engage and bend the front ends 1e of conductors 1b into engagement with lower surface 272b, as shown in Figures 10, 11 and 13.

Cylinder 213 is operated opening clamping members 214; motor 212 operates returning eccentric cam 217 and plate 213a to its original position on rail 219; cylinder 211 is operated moving plate 211a along rail 215 to its original position in the direction of arrow P; cylinder 261 is operated thereby moving comb members 250 to their original positions; cylinders 271 and 273 are operated lowering comb member 272 and raising cutting and bending member 274; and motor 231 is operated moving sensing device 237, 238 to its original position. Comb member 280 remains in its operated position, as shown in Figure 11, so that the conductors 1 are maintained in position and is then moved along frame 293 in the direction of arrow Q via member 292, as shown in Figure 3, thereby moving cable 5 to the next station at which the conductors 1a, 1b are welded to respective electrical contacts of an electrical connector(not shown) by a conventional welding device. Comb member 280 is then moved downwardly by operation of cylinder 291 and returned to its original position via member 292 or comb member 280 can be moved along frame 293 to another downstream station for further operations on the cable and connector assembly via member 292 to maintain the conductors in proper spaced relationship.

The above-described operations of the cable-preparing apparatus are automatically, continuously and rapidly repeated to accurately adjust and bend conductors of flat cables for termination to electrical contacts of electrical connectors thereby forming reliable electrical cable assemblies at a rapid rate.

Claims

1. An apparatus for preparing an end of a flat electrical cable for aligning, cutting and bending electrical conductors of the cable for elec-

trical connection to electrical contacts of an electrical connector, said apparatus comprising:

a clamp (10) including a base (11), a movable clamping section (12) in which the flat cable (5) is to be mounted is positioned on the base (11), and a locking section (13) for locking the clamping section (12) in position on the base (11);

a clamp-positioning device (100) including a sensing member (102) for sensing a first conductor (1c) of exposed conductors (1) of the cable (5) between a jacket (2) and front end jacket (2a), a lock release device (110) for releasing the locking section (13), and a clamp-moving device (120) is operated if the first conductor (1c) is not in alignment with said sensing member (102) to move the clamping section (12) along the base (11) after the locking section (13) has been released by said lock release device (110) until the first conductor (1c) is in alignment with said sending member (102) whereafter the lock release device (110) permits the locking section (13) to lock the clamping section (12) on the base (11); and

a conductor-aligning, cutting and bending device (200) including a conductor-aligning device (210) for clamping onto the front end jacket (2a), a conductor-detecting device (230) for detecting the first conductor (1c), said conductor-aligning device (210) being operated if the first conductor (1c) is out of alignment with said conductor-detecting device (230) to move the front end jacket (2a) until the first conductor (1c) is detected by the conductor-detecting device (230), a comb member (250) having teeth (251), a comb-moving device (260) for moving the comb members (250) so that the conductors (1) are positioned between the teeth (251) thereby spacing and aligning the conductors (1), and a conductor-cutting and bending device (270) for cutting the conductors (1) and bending the conductors (1b).

2. An apparatus as claimed in claim 1, characterized in that said base (11) has a channel (11a) in which a projection (14a) on the clamping section (12) is disposed.

3. An apparatus as claimed in claim 1, characterized in that said locking section (13) includes a spring-biased engaging member (22) and a lever (21) connected thereto for moving said engaging member (22) out of engagement with a projection (14a) on said clamping section (12) when said lever (21) is engaged by said lock release device (110).

4. An apparatus as claimed in claim 1, characterized in that said clamp-moving device (120) comprises a block (127) having a projection (127a), a driving screw (126) threadably engaged with said block (127) to drive said block back and forth, microswitches (128a, b, c) positioned for engagement by said projection (127a) with said microswitch (128a) being located at a central position in alignment with said sensing member (102) and said microswitches (128b, c) being spaced to each side of said microswitch (128a), a plate (123) having spaced pins (123a) movably mounted onto said block (127) and being moved so that said pins (123a) are within holes (16a) of clamping section (12) so that said driving screw (126) drives said block (127) and said clamping section (12) and the cable 5 clamped therein from said microswitch (128b) or (128c) after said lock release device (110) has released the locking section (13) until said projection (127a) operates said microswitch (128a) whereby the first conductor (1c) is aligned with said sensing member (102) whereafter said lock release device (110) permits the locking section (13) to lock the clamping section (12) on the base (11).

5. An apparatus as claimed in claim 1, characterized in that the comb member (250) comprises a plurality of comb members (250a, 250b) and said comb-moving device (260) includes cam members (264) corresponding to the same number of said comb members (250a, 250b) for moving the comb members (250a, 250b) so that the conductors (1) are positioned between the teeth (251).

6. An apparatus as claimed in claim 1, characterized in that said conductor-cutting and bending device (270) comprises a member (272) having an upper surface (272a) that is positioned against the conductors (1) and another comb member (280) that is positioned so that its teeth (281) receive the conductors (1) therebetween, a conductor-bending and cutting member (274) having a cutting member (274a) that in conjunction with an edge of said upper surface (272a) of said member (272) cuts the conductors (1) and a bending member (274b) has teeth that engage and bend certain ones (1b) of conductors (1) into engagement with a lower surface (272b) of member (272).

Patentansprüche

1. Vorrichtung zum Vorbereiten eines Endes eines elektrischen Flachkabels zum Ausrichten,

Schneiden und Biegen elektrischer Leiter des Kabels zur elektrischen Verbindung mit elektrischen Kontakten eines elektrischen Verbinders, dadurch gekennzeichnet, daß die Vorrichtung aufweist:
eine Klemme (10) mit einer Basis (11), einem beweglichen Klemmabschnitt (12), in dem das Flachkabel (5) zu montieren ist und der auf der Basis (11) positioniert ist, und mit einem Verriegelungsabschnitt (13) zum Verriegeln des Klemmabschnitts (12) in Position auf der Basis (11);
eine Klemmenpositioniervorrichtung (100) mit einem Sensorelement (102) zum Erfassen eines ersten Leiters (1c) von freiliegenden Leitern (1) des Kabels ()5 zwischen einem Mantel (2) und einem am Vorderende befindlichen Mantel (2a), mit einer Verriegelungsfreigabevorrichtung (110) zum Freigeben des Verriegelungsabschnitts (13), und mit einer Klemmenbewegungsvorrichtung (120), die dann betätigt wird, wenn der erste Leiter (1c) nicht mit dem Sensorelement (102) ausgerichtet ist, um den Klemmabschnitt (12), nachdem der Verriegelungsabschnitt (13) durch Verriegelungsfreigabevorrichtung (110) freigegeben worden ist, längs der Basis (11) zu bewegen, bis der erste Leiter (1c) mit dem Sensorelement (102) ausgerichtet ist, wonach die Verriegelungsfreigabevorrichtung (110) dem Verriegelungsabschnitt (13) ein Verriegeln des Klemmabschnitts (12) auf der Basis (11) ermöglicht; und
eine Leiterausricht-, Schneid- und Biegevorrichtung (200) mit einer Leiterausrichtvorrichtung (210) zum Klemmen auf den am Vorderende befindlichen Mantel (2a), mit einer Leiterdetektionsvorrichtung (230) zum Detektieren des ersten Leiters (1c), wobei die Leiterausrichtvorrichtung (210), wenn der erste Leiter (1c) nicht mit der Leiterdetektionsvorrichtung (230) ausgerichtet ist, derart betätigt wird, daß der am Vorderende befindliche Mantel (2a) bewegt wird, bis der erste Leiter (1c) von der Leiterdetektionsvorrichtung (230) detektiert wird, mit einem Kammelement (250) mit Zähnen (251), mit einer Kammbewegungsvorrichtung (260) zum Bewegen der Kammelemente (250) in einer derartigen Weise, daß die Leiter (1) zwischen den Zähnen (251) positioniert sind und dadurch die Leiter (1) voneinander beabstandet und ausgerichtet sind, und mit einer Leiterschneid- und Biegevorrichtung (270) zum Schneiden der Leiter (1) und zum Biegen der Leiter (1b).

2. Vorrichtung nach Anspruch 1, dadurch gekennzeichnet, daß die Basis (11) einen Kanal (11a) aufweist, in dem ein Vorsprung (14a) an dem Klemmabschnitt (12) angeordnet ist.

3. Vorrichtung nach Anspruch 1, dadurch gekennzeichnet, daß der Verriegelungsabschnitt (13) ein von der Federvorspannung stehendes Eingriffselement (22) und einen mit diesem verbundenen Hebel (21) zum Bewegen des Eingriffselements (22) außer Eingriff mit einen Vorsprung (14a) an dem Klemmabschnitt (12), wenn die Verriegelungsfreigabevorrichtung (110) an dem Hebel (121) angreift, aufweist.

4. Vorrichtung nach Anspruch 1, dadurch gekennzeichnet, daß die Klemmenbewegungsvorrichtung (120) einen Block (127) mit einem Vorsprung (127a), eine Antriebsspindel (126), die zum Vor- und Zurückbewegen des Blocks (127) gewindemäßig mit dem Block in Eingriff steht, für den Eingriff mit dem Vorsprung (127a) positionierte Mikroschalter (128a,b,c), wobei sich der Mikroschalter (128a) in einer zentralen Position in Ausrichtung mit dem Erfassungselement (102) befindet und die Mikroschalter (128b,c) beidseits des Mikroschalters (128a) mit Abstand von diesem angeordnet sind, sowie eine mit voneinander beabstandeten Stiften (123a) versehene Platte (123) aufweist, die an dem Block (127) beweglich angebracht ist und derart bewegt wird, daß sich die Stifte (123a) in Löchern (16a) des Klemmabschnitts (12) befinden, so daß die Antriebsspindel (126) den Block (127) und den Klemmabschnitt (12) sowie das darin eingeklemmte Kabel (5) nach der Freigabe des Verriegelungsabschnitts (13) durch die Verriegelungsfreigabevorrichtung (110) antriebsmäßig von dem Mikroschalter (128b) oder (128c) wegbewegt, bis der Vorsprung (127a) den Mikroschalter (128a) betätigt, wodurch der erste Leiter (1c) mit dem Erfassungselement (102) ausgerichtet ist, wonach die Verriegelungsfreigabevorrichtung (110) dem Verriegelungsabschnitt (13) ein Verriegeln des Klemmabschnitts (12) auf der Basis (11) gestattet.

5. Vorrichtung nach Anspruch 1, dadurch gekennzeichnet, daß das Kammelement (250) eine Mehrzahl von Kammelementen (250a, 250b) aufweist und die Kammbewegungsvorrichtung (260) Steuerflächenglieder (264) aufweist, deren Anzahl der Anzahl der Kammelemente (250a, 250b) entspricht und die zum derartigen Bewegen der Kammelemente (250a, 250b) vorgesehen sind, daß die Leiter (1) zwischen den Zähnen (251) positioniert werden.

6. Vorrichtung nach Anspruch 1, dadurch gekennzeichnet, daß die Leiterschneid- und Biegevor-

richtung (270) ein Element (272) mit einer oberen Oberfläche (272a), die anliegend an die Leiter (1) positioniert wird, und ein weiteres Kammelement (280), das derart positioniert wird, daß seine Zähne (281) die Leiter (1) zwischen sich aufnehmen, sowie ein Leiterbiege- und Schneidelement (274) aufweist, das ein Schneidelement (274a) besitzt, welches in Verbindung mit einer Kante der oberen Oberfläche (272a) des Elements (272) die Leiter (1) durchschneidet, sowie ein Biegeelement (274b) besitzt, das Zähne aufweist, die an bestimmten (1b) der Leiter (1) angreifen und diese in Eingriff mit einer unteren Fläche (272b) des Elements (272) biegen.

Revendications

1. Appareil pour préparer une extrémité d'un câble électrique plat afin d'aligner, de couper et de plier des conducteurs électriques du câble pour une connexion électrique sur des contacts électriques d'un connecteur électrique, ledit appareil comportant :

une bride (10) comprenant une embase (11), une partie mobile (12) de bridage dans laquelle le câble plat (5) à monter est positionné sur l'embase (11), et une partie (13) de verrouillage destinée à verrouiller la partie (12) de bridage en position sur l'embase (11) ;

un dispositif (100) de positionnement de bride comprenant un élément (102) de détection destiné à détecter un premier conducteur (1c) faisant partie de conducteurs dénudés (1) du câble (5) entre une gaine (2) et une gaine d'extrémité avant (2a), un dispositif (110) de libération de verrou destiné à libérer la partie (13) de verrouillage, et un dispositif (120) de déplacement de bride qui est manoeuvré si le premier conducteur (1c) n'est pas en alignement avec ledit élément (102) de détection afin de déplacer la partie de bridage (12) le long de l'embase (11) après que la partie de verrouillage (13) a été libérée par ledit dispositif (110) de libération de verrou jusqu'à ce que le premier conducteur (1c) soit en alignement avec ledit élément (102) de détection, après quoi le dispositif (110) de libération de verrou permet à la partie de verrouillage (13) de verrouiller la partie (12) de bridage sur l'embase (11) ;

un dispositif (200) d'alignement, de coupe et de pliage de conducteurs comprenant un dispositif (210) d'alignement de conducteurs destiné à réaliser un bridage sur la gaine d'extrémité avant (2a), un dispositif (230) de détection de conducteurs destiné à détecter le premier conducteur (1c), ledit dispositif (210) d'alignement de conducteurs étant manoeuvré si le premier conducteur (1c) n'est pas en alignement avec ledit dispositif (230) de détection de conducteurs de façon à déplacer la gaine d'extrémité avant (2a) jusqu'à ce que le premier conducteur (1c) soit détecté par le dispositif (230) de détection de conducteurs, un élément à peigne (250) ayant des dents (251), un dispositif (260) de déplacement de peigne destiné à déplacer les éléments à peigne (250) afin que les conducteurs (1) soient positionnés entre les dents (251), espaçant et alignant ainsi les conducteurs (1), et un dispositif (270) de couple et de pliage de conducteurs destiné à couper les conducteurs (1) et à plier les conducteurs 1b.

2. Appareil selon la revendication 1, caractérisé en ce que ladite embase (11) présente une rainure (11a) dans laquelle une saillie (14a) située sur la partie (12) de bridage est disposée.

3. Appareil selon la revendication 1, caractérisé en ce que ladite partie (13) de verrouillage comprend un élément (22) d'engagement rappelé par ressort et un levier (21) qui lui est relié pour dégager ledit élément d'engagement (22) d'une saillie (14a) sur ladite partie (12) de bridage lorsque ledit levier (21) est engagé par ledit dispositif (110) de libération de verrou.

4. Appareil selon la revendication 1, caractérisé en ce que ledit dispositif (120) de déplacement de bride comporte un bloc (127) ayant une saillie (127a), une vis d'entraînement (126) engagée par vissage avec ledit bloc (127) pour entraîner ledit bloc en va-et-vient, des microcontacts (128a,b,c) positionnés pour être engagés par ladite saillie (127a), ledit microcontact (128a) étant placé en une position centrale en alignement avec ledit élément (102) de détection et lesdits microcontacts (128b,c) étant espacés de chaque côté dudit microcontact (128a), une plaque (123) ayant des broches espacées (123a), montée de façon mobile sur ledit bloc (127) et déplacée afin que lesdites broches (123a) soient dans des trous (16a) de la partie (12) de bridage de manière que ladite vis d'entraînement (126) entraîne ledit bloc (127) et ladite partie de bridage (12) et le câble (5), bridé en elle, depuis ledit microcontact (128b ou 128c) après que ledit dispositif (110) de libération de verrou a libéré la partie de verrouillage (13) jusqu'à ce que ladite saillie (127a) actionne ledit microcontact (128a), grâce à quoi le premier conducteur (1c) est aligné avec ledit élément de détection (102), après

quoi ledit dispositif (110) de libération de verrou permet à la partie (13) de verrouillage de verrouiller la partie (12) de bridage sur l'embase (11).

5. Appareil selon la revendication 1, caractérisé en ce que l'élément à peigne (250) comprend plusieurs éléments à peignes (250a, 250b) et ledit dispositif (260) de déplacement de peigne comprend des éléments à cames (264) correspondant au même nombre desdits éléments à peignes (250a, 250b) pour déplacer les éléments à peignes (250a, 250b) afin que les conducteurs (1) soient positionnés entre les dents (251).

6. Appareil selon la revendication 1, caractérisé en ce que ledit dispositif (270) de coupe et de pliage de conducteurs comporte un élément (272) ayant une surface supérieure (272a) qui est positionnée contre les conducteurs (1) et un autre élément à peigne (280) qui est positionné de façon que ses dents (281) recoivent entre elles les conducteurs (1), un élément (274) de pliage et de coupe de conducteurs ayant un élément de coupe (274a) qui, conjointement avec une arête de ladite surface supérieure (272a) dudit élément (272), coupe les conducteurs (1) et un élément de pliage (274b) comporte des dents qui engagent et plient certains (1b) des conducteurs (1) jusqu'en engagement avec une surface inférieure (272b) de l'élément (272).

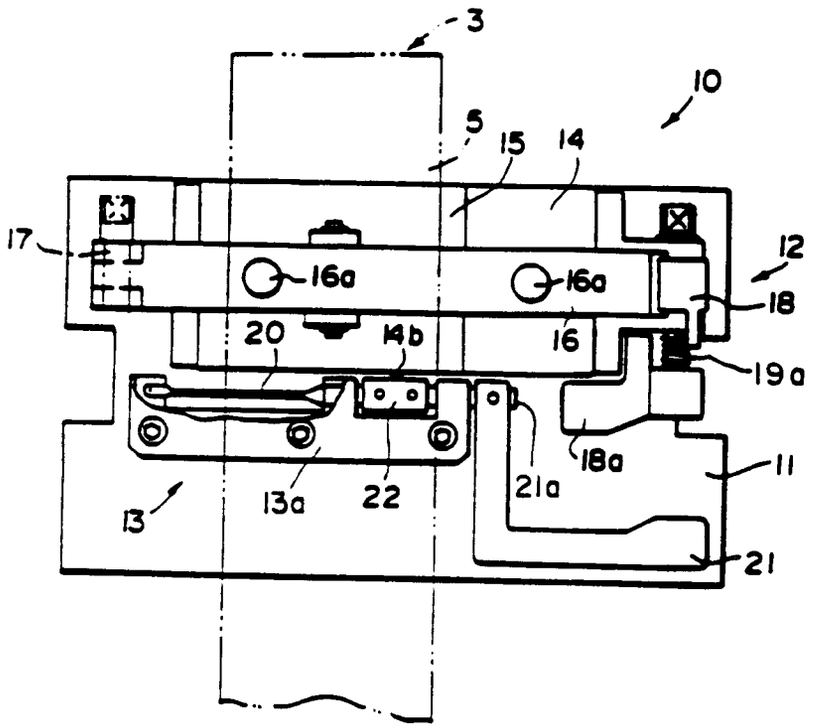

FIG.1A

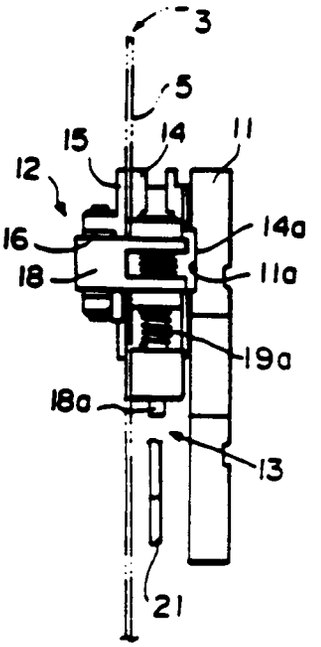

FIG.1C

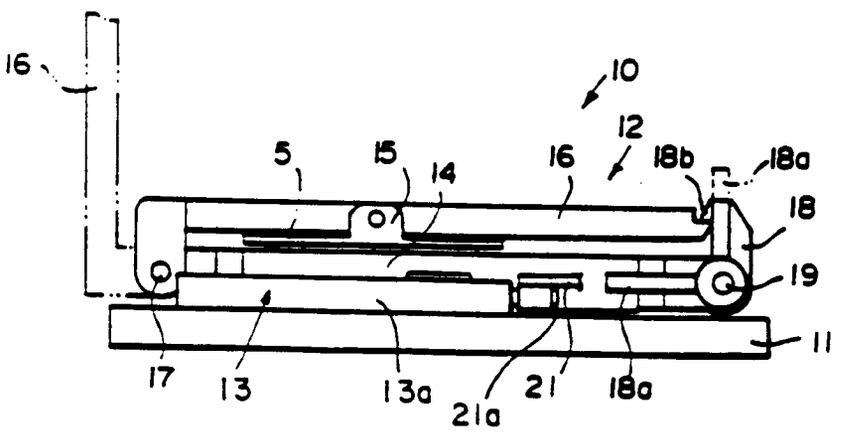

FIG.1B

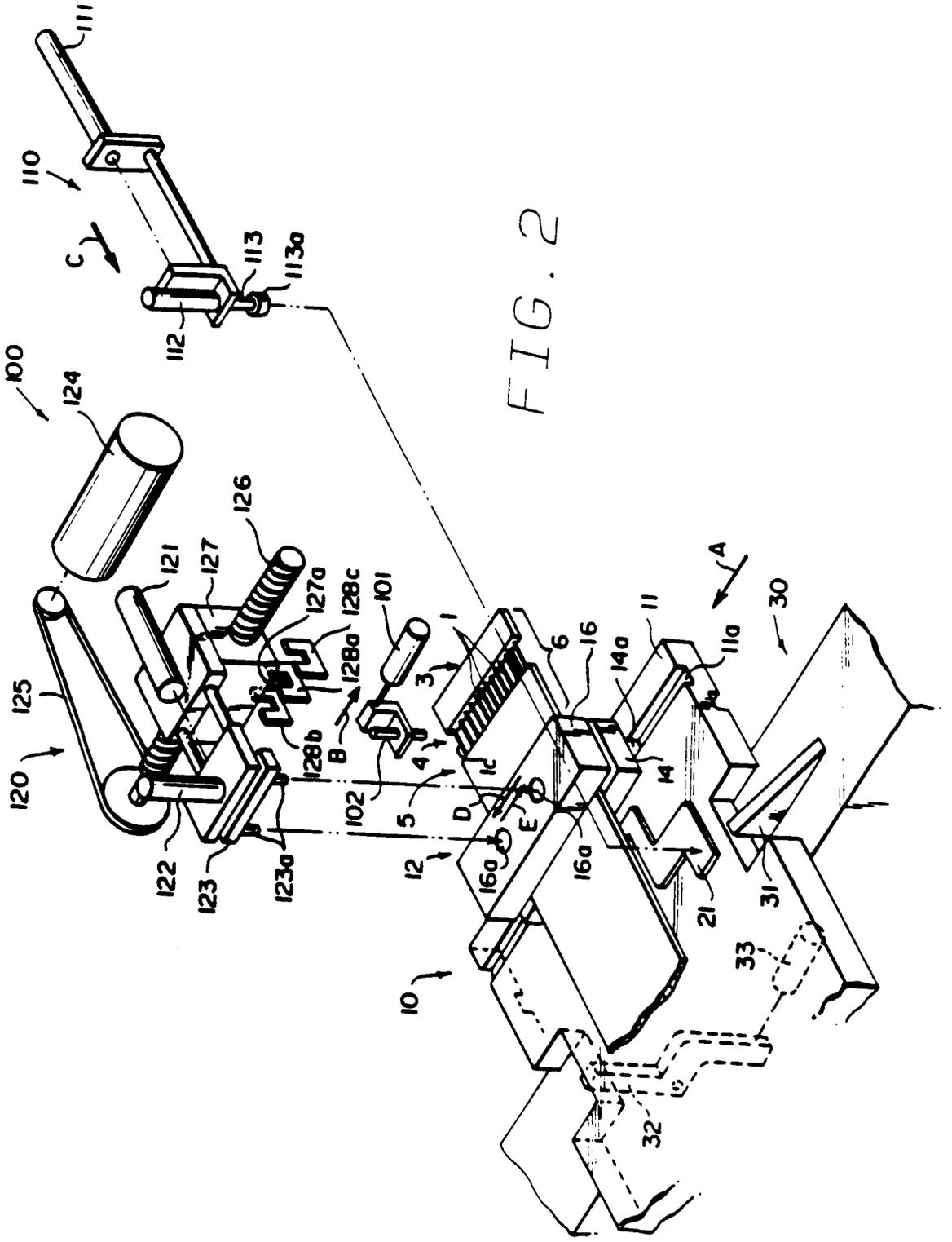
100
110
111
112
113
113a
C
120
121
122
123
123a
124
125
126
127
127a
128a
128b
128c
B
101
102
1
1c
3
4
5
6
10
11
11a
12
14
14a
16
16a
21
30
31
32
33
A
D
E

FIG. 2

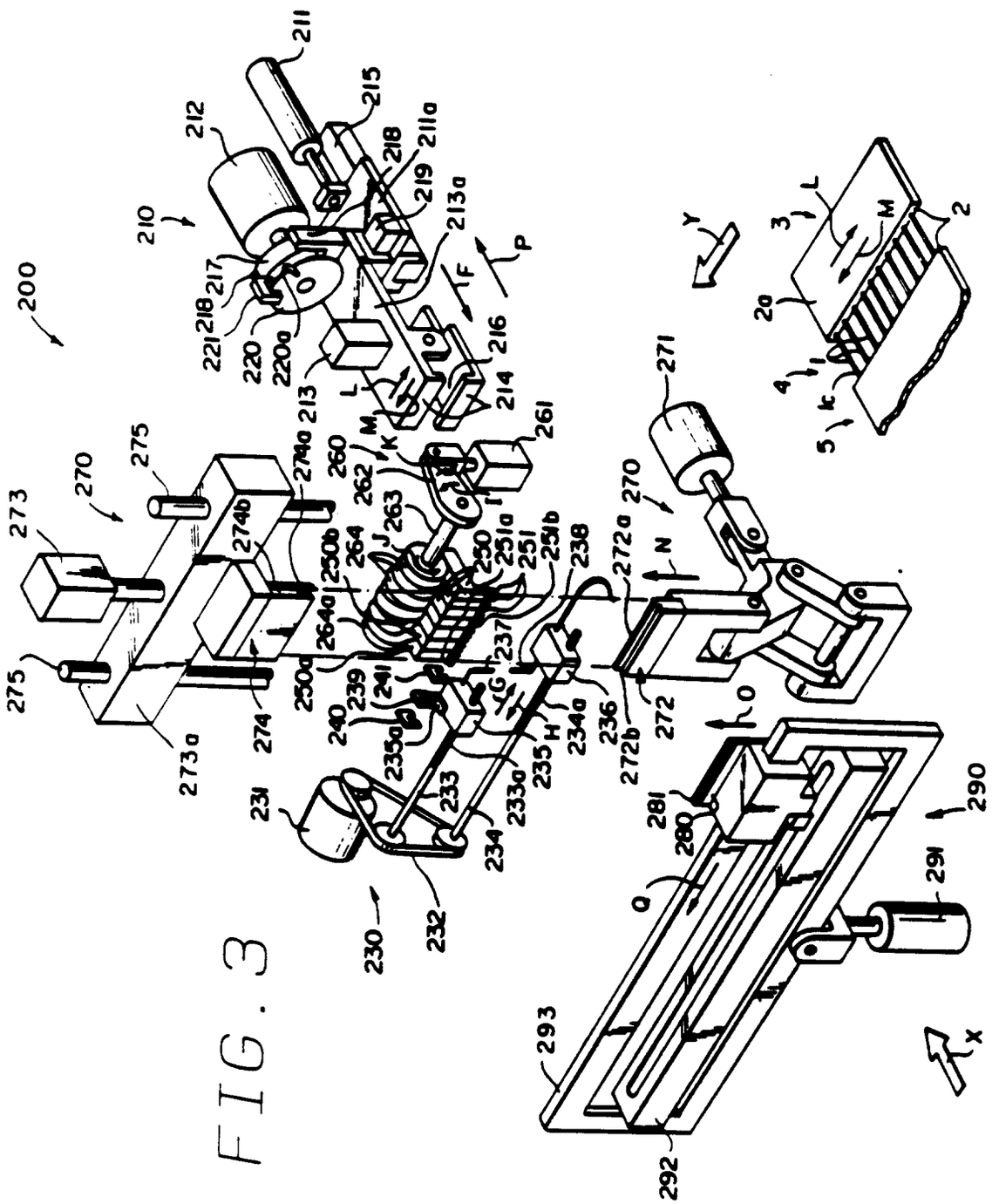

FIG. 3

FIG. 4

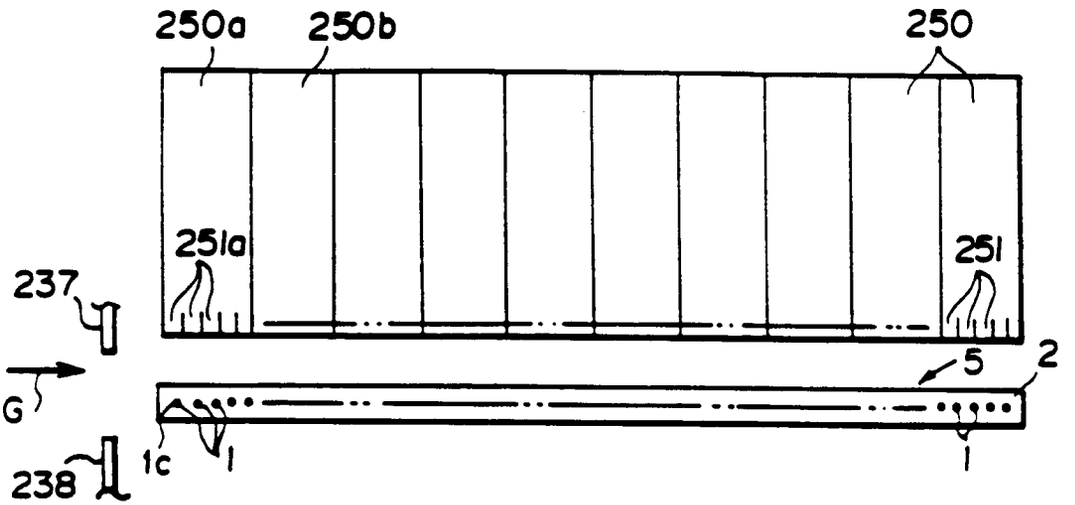

FIG. 5A

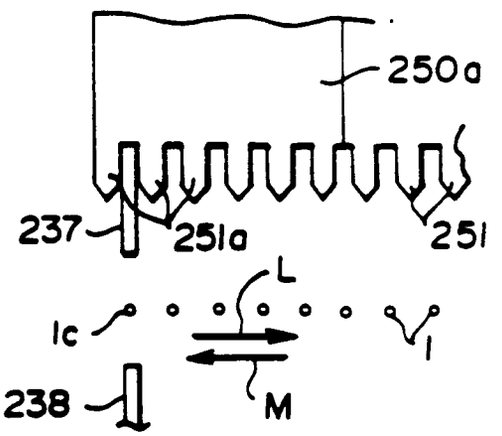

FIG. 5B

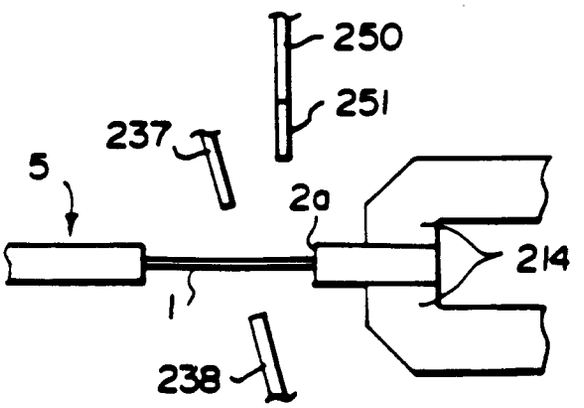

FIG. 6

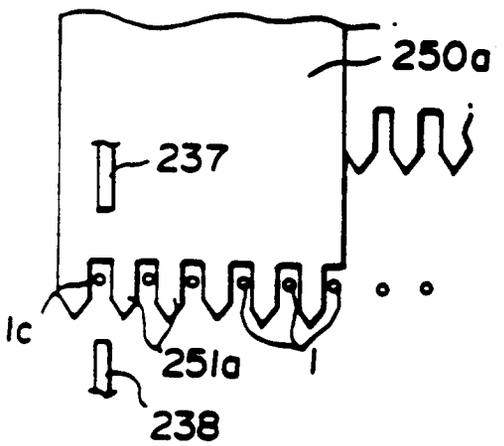

FIG. 7

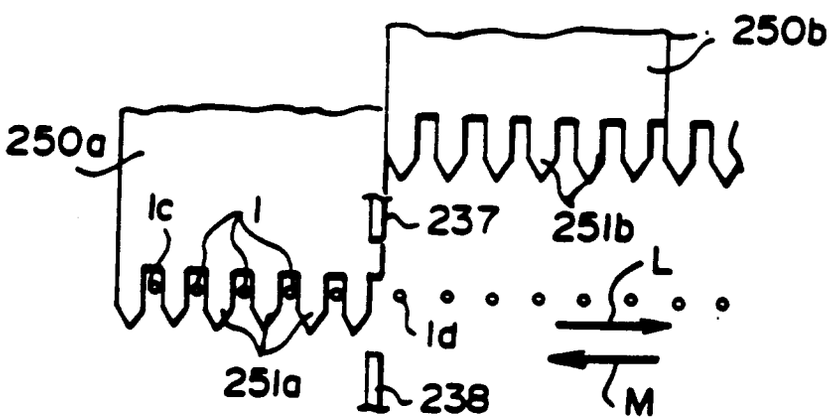

FIG. 8

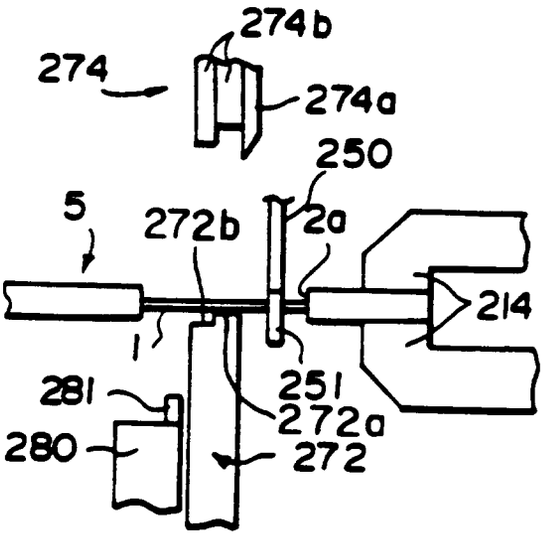

FIG. 9

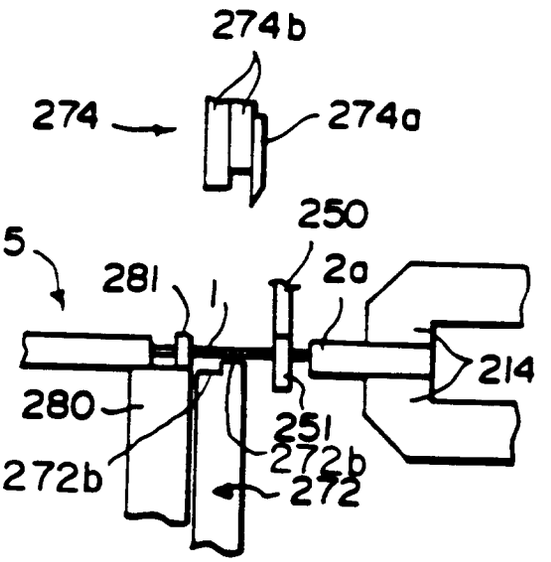

FIG. 10

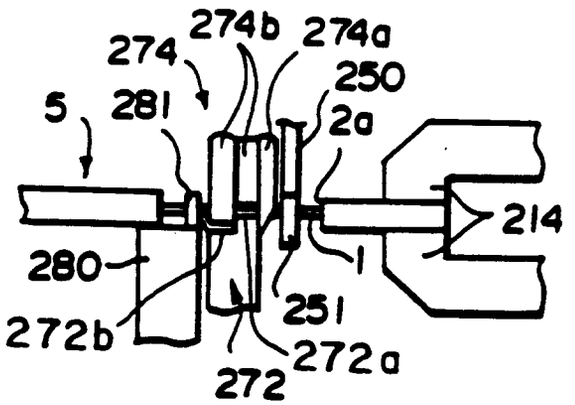

FIG. 11

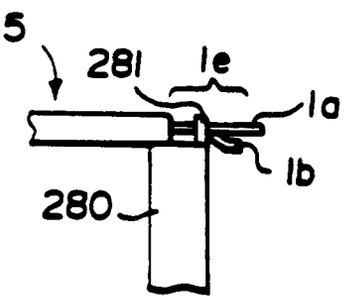

FIG.12

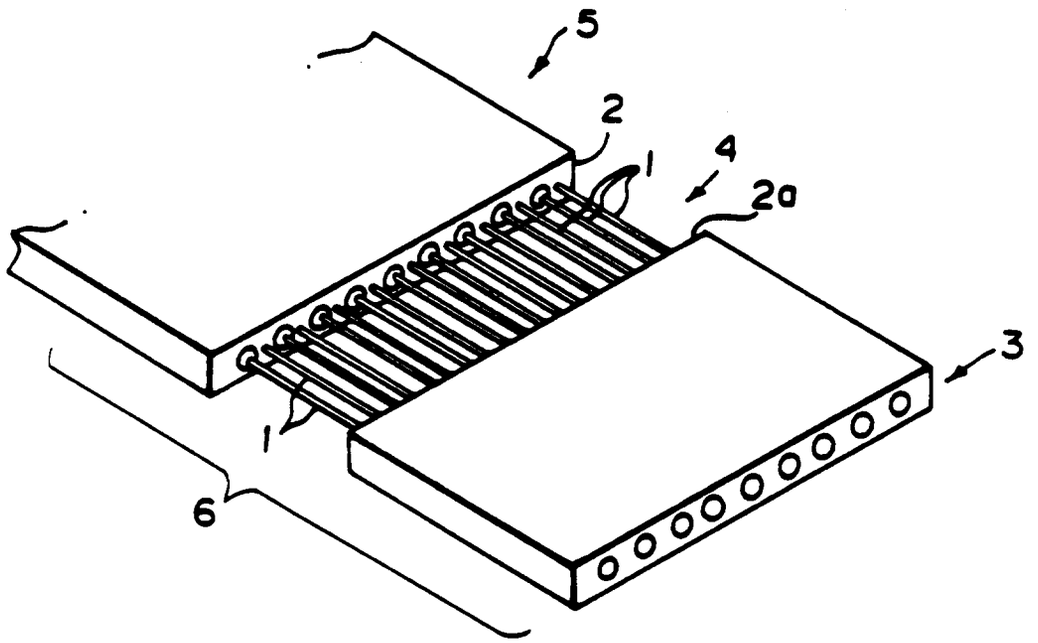

FIG.13

