Dec. 4, 1951 J. G. VERGOBBI 2,577,386

BAG FORMING MACHINE

Filed Aug. 14, 1946 4 Sheets-Sheet 1

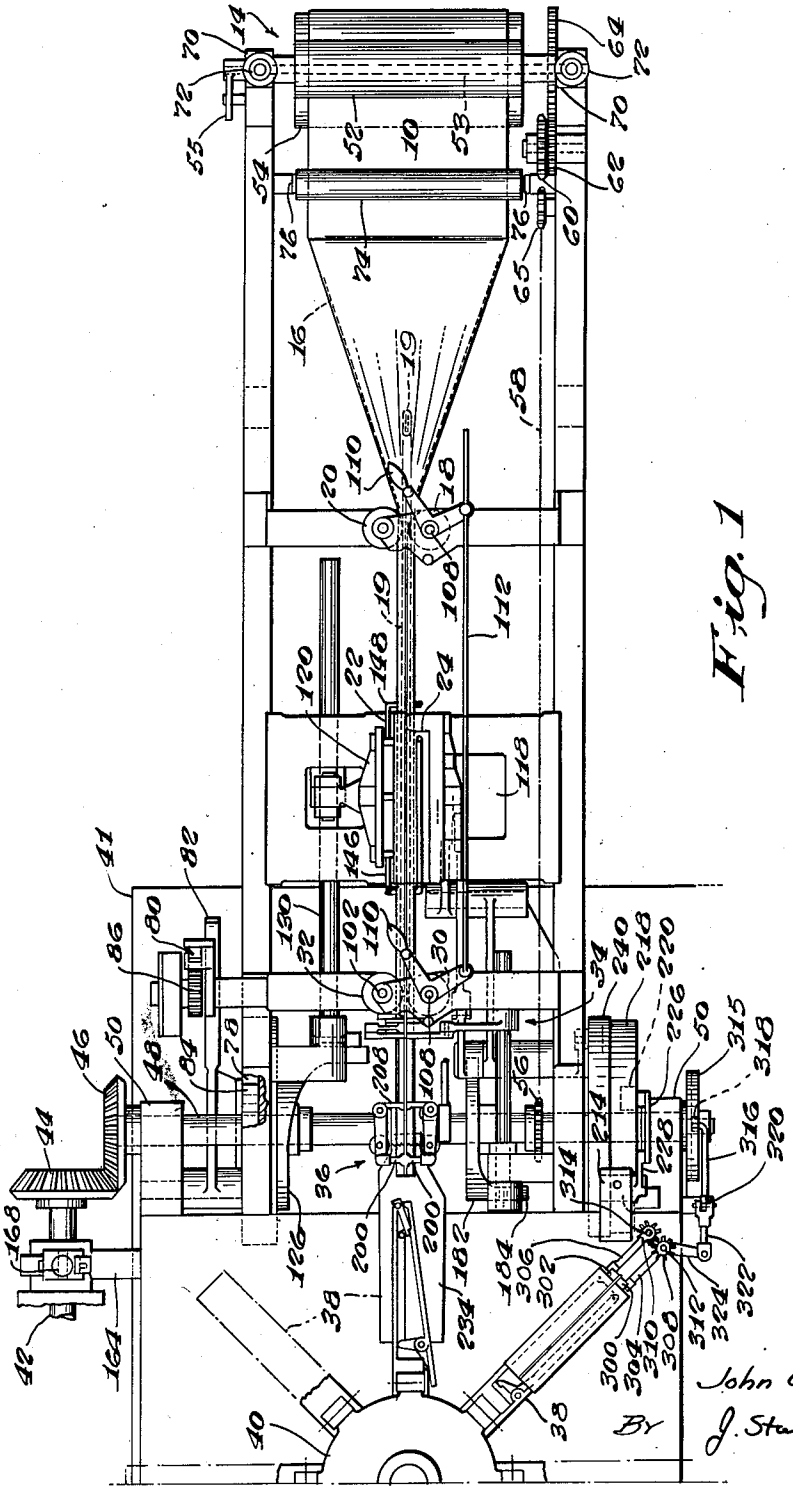

Fig. 1

INVENTOR.
John G. Vergobbi
By J. Stanley Churchill
ATTORNEY

Dec. 4, 1951 J. G. VERGOBBI 2,577,386

BAG FORMING MACHINE

Filed Aug. 14, 1946 4 Sheets-Sheet 2

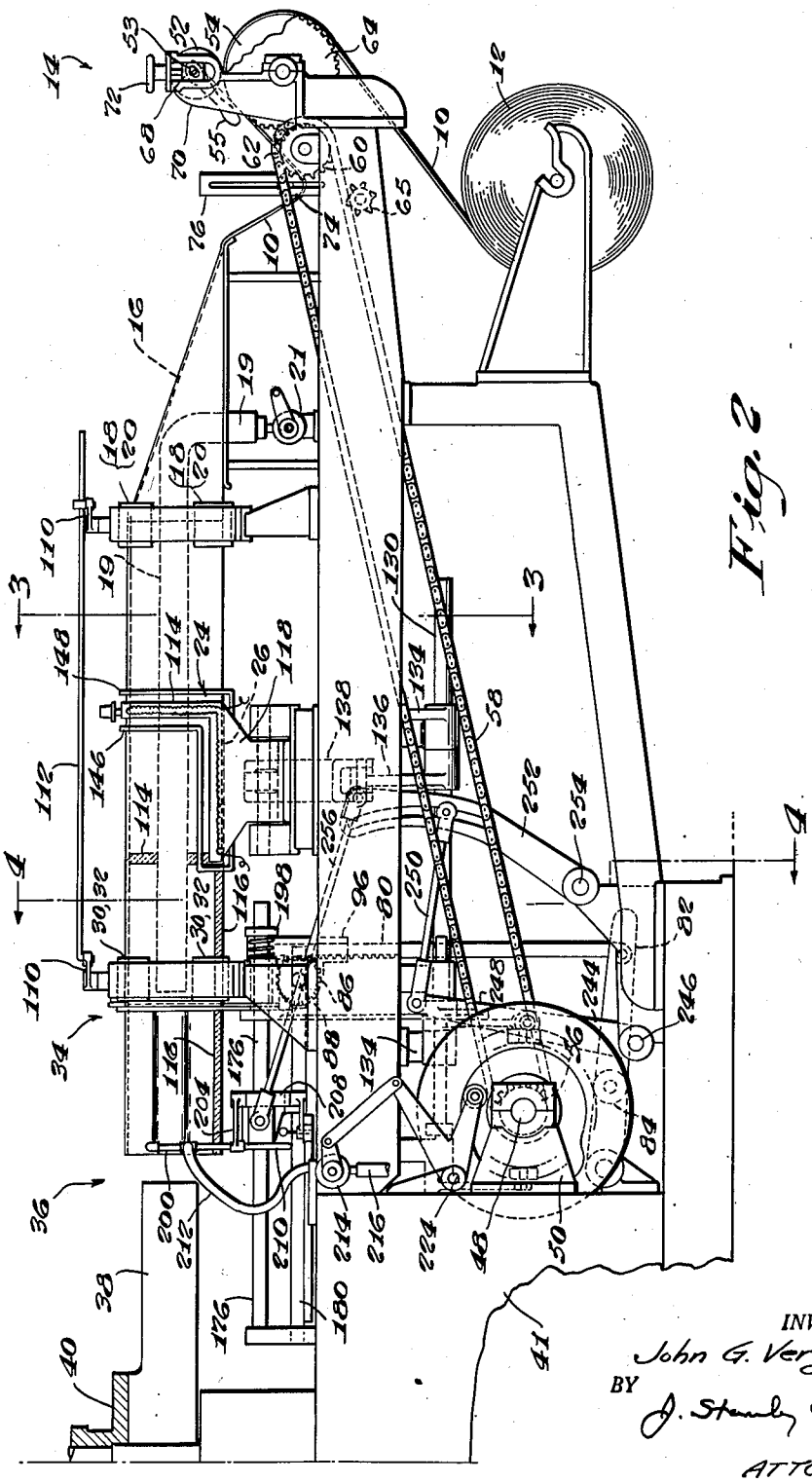

Fig. 2

INVENTOR.
John G. Vergobbi
BY
J. Stanley Churchill
ATTORNEY

Dec. 4, 1951 J. G. VERGOBBI 2,577,386

BAG FORMING MACHINE

Filed Aug. 14, 1946 4 Sheets-Sheet 3

Fig. 3

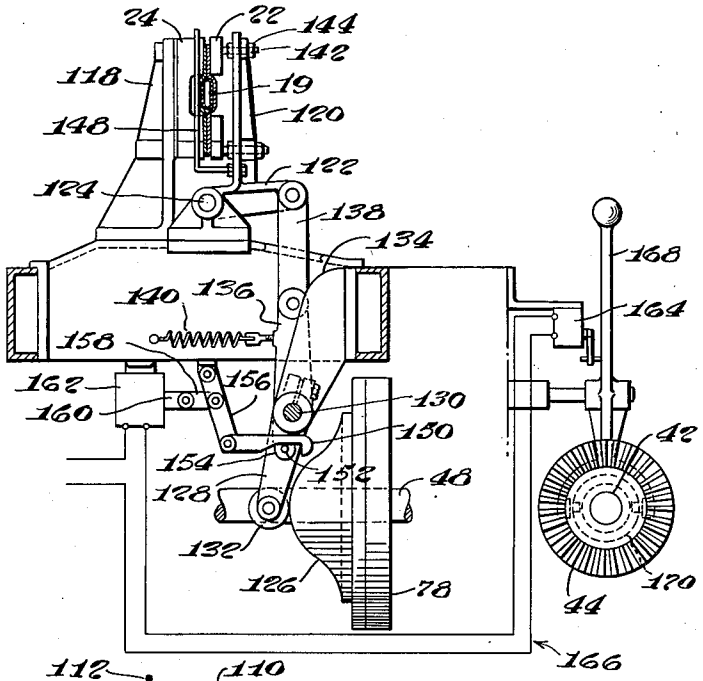

Fig. 4

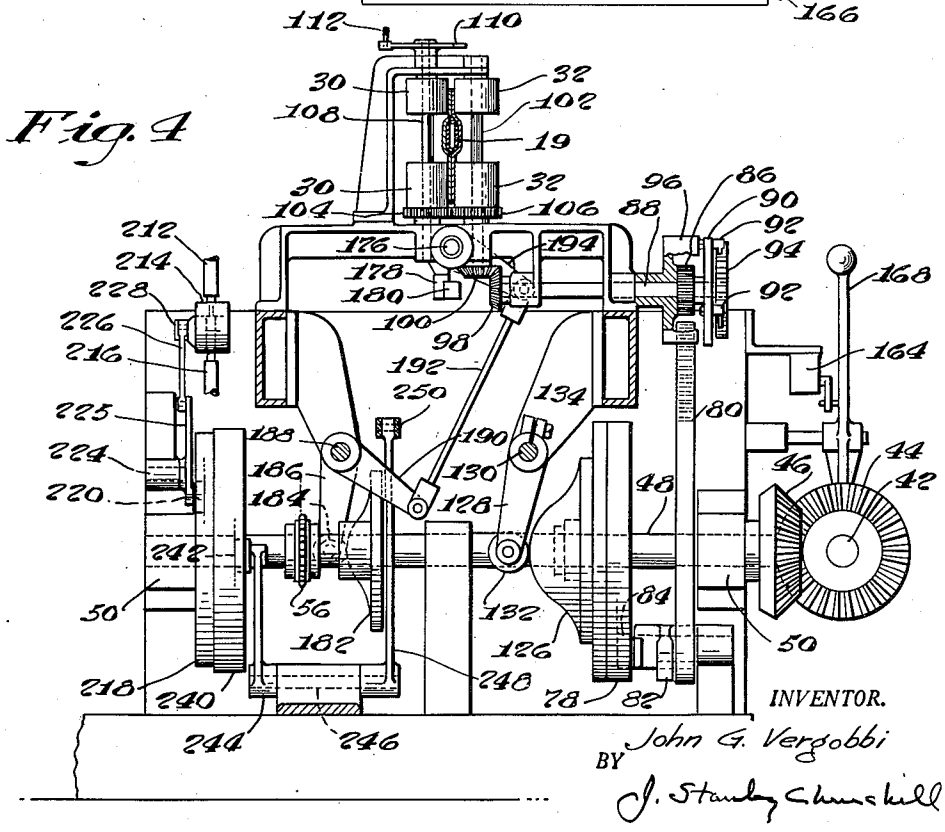

INVENTOR.

BY John G. Vergobbi

J. Stanley Churchill

ATTORNEY

Dec. 4, 1951 J. G. VERGOBBI 2,577,386

BAG FORMING MACHINE

Filed Aug. 14, 1946 4 Sheets-Sheet 4

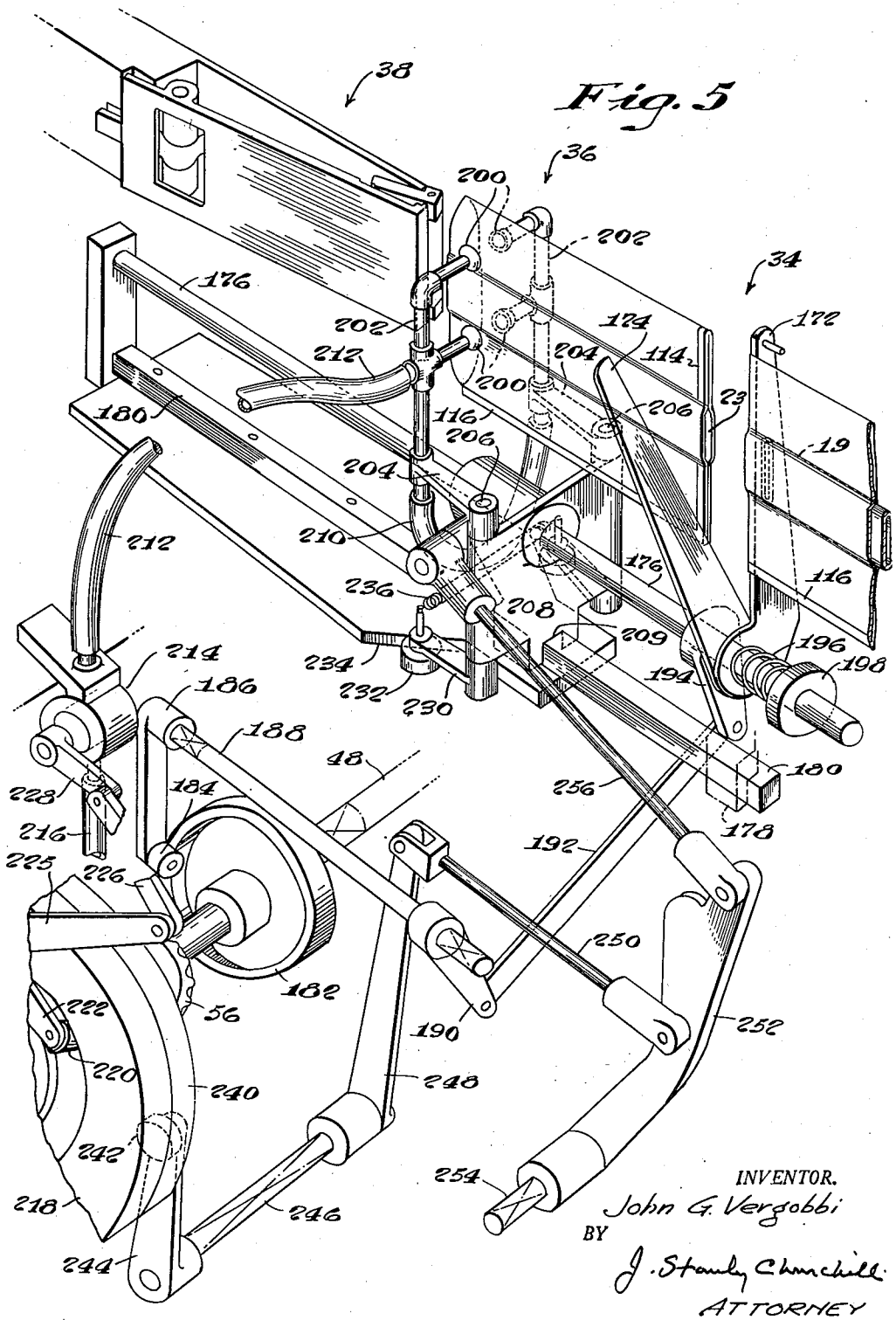

Fig. 5

INVENTOR.
John G. Vergobbi
BY
J. Stanley Churchill
ATTORNEY

Patented Dec. 4, 1951 2,577,386

UNITED STATES PATENT OFFICE

2,577,386

BAG FORMING MACHINE

John G. Vergobbi, Quincy, Mass., assignor to Pneumatic Scale Corporation, Limited, Quincy, Mass., a corporation of Massachusetts

Application August 14, 1946, Serial No. 690,368

9 Claims. (Cl. 93—18)

1

This invention relates to a packaging machine and more particularly to a container forming machine.

In general the invention has for an object to provide a novel and efficient container forming machine which among other uses may be embodied with advantage in a packaging machine for producing the inner liners for lined containers.

Another object of the invention is to provide a novel and improved container forming machine of the type provided with a mandrel or forming block and in which provision is made for opening a flat bag and transferring the same onto the forming block in a novel and efficient manner whereby to overcome difficulties formerly encountered during such operation.

With these objects in view and such others as may hereinafter appear the invention consists in the packaging machine and in the various structures, arrangements and combinations of parts hereinafter described and particularly defined in the claims at the end of this specification.

In the drawings illustrating the preferred form of the apparatus, Fig. 1 is a plan view of a packaging machine embodying the present invention; Fig. 2 is a side elevation of the machine shown in Fig. 1; Figs. 3 and 4 are end views in cross section taken on the lines 3—3 and 4—4 respectively of Fig. 2; and Fig. 5 is a perspective view of apparatus for opening and transferring a flat bag onto a collapsed mandrel.

In general, the present invention contemplates the provision of apparatus for the production of inner bags or liners adapted to be sealed for use in a container suitable for the packaging of dehydrated foods. In the preferred embodiment of the invention individual flat bags may be produced from a web of bag forming material comprising a heat sealable material such as the product commercially obtainable in sheet form under the trade name "Plyofilm." Provision is made for forming the bag forming material into a strip having a closed top and open bottom and for sealing the strip transversely and along the longitudinal bottom edge to form a series of connected bag sections. The strip may and preferably will be intermittently moved into position for effecting the transverse and longitudinal sealing operations.

In the illustrated embodiment of the invention, provision is made for severing successive bag sections adjacent one side of each transverse seal to form individual open mouth bags closed on one side by the folded edge and heat sealed along two edges. Provision is also made for opening the flat bags thus formed by bag opening and transferring means arranged to engage opposed walls of the bag, and to separate the walls at the mouth of the bag sufficiently to enable the bag to be drawn over the forward end of a collapsed mandrel or forming block and then bodily transferring the bag onto the mandrel, the latter preferably forming part of a package making machine for wrapping a container about the bag thus disposed upon the mandrel. In the subsequent filling of the package the extended mouth portions of the rectangularly formed lining bag may be brought together face to face and sealed to provide a hermetically sealed container forming an efficient package suitable for use in the packaging of dehydrated foods or the like.

2

In the preferred embodiment of the invention the bag opening and transferring mechanism for transferring a flat bag onto a mandrel may comprise movable suction members engageable with opposed side walls of the flat bag, and said suction members are arranged to be spread apart to effect separation of the side walls and opening of the bag to permit the same to be transferred over the mandrel. Prior to the present invention difficulty has been encountered in opening a flat bag in this manner because of the lack of an air vent leading into the interior of the bag between the contiguous side walls of the bag, the displacement of the air from the interior of the bag during its manufacture tending to hold the side walls together. In accordance with one feature of the present invention provision is made for forming a flat bag open at one end and provided with an unsealed portion forming a vent at the other end of the bag, said vent being subsequently sealed at a succeeding station of operation. Provision is further made for directing a stream of air through said vent into the bag and between the side walls thereof prior to and during the bag opening operation whereby to permit the bag to be successfully opened preparatory to transferring the same onto the mandrel.

Referring now to the drawings, 10 represents a web of bag forming material such as "Plyofilm." As herein shown, the web may be withdrawn from a roll 12 thereof by suitable unwinding mechanism indicated generally at 14, and in the formation of the bag the web being withdrawn is arranged to pass through shaping mechanism comprising a generally V-shaped flared forming member 16, and between idle

folding rollers 18, 20 arranged to fold the web longitudinally to present opposed upper and lower portions of the walls of the web in contiguous engagement. Thereafter the folded strip is arranged to pass between sealing elements 22, 24, the latter of which may be heated by any suitable heating means such as the electrical heating element indicated at 26. As herein shown, in order to provide a vent opening in the bag and to project a stream of air through said opening and into the foremost bag section which is about to be transferred onto a mandrel, an air pipe 19 is arranged to extend vertically, as illustrated, between the side walls of the strip at a point adjacent the forming member 16 until it reaches a medial point between the upper and lower edges of the strip and thereafter the pipe is extended in a horizontal plane longitudinally of the strip between the side walls thereof. The air pipe 19 may and preferably will be flattened out as illustrated in order to occupy a minimum space between the walls of the strip and the pipe terminates at a point adjacent the endmost bag section, as will be hereinafter more fully described. In order to accommodate the air pipe 19 between the strip during the forming and sealing operations, each roller 18, 20 is formed in two sections spaced apart vertically to straddle the pipe 19, and, the transverse sealing portions 22, 24 are likewise spaced apart to leave an unsealed portion at the point where the pipe passes between the walls of the strip.

The cooperating sealing members, 22, 24 are preferably of an L-shape arranged to form successive transverse and longitudinal seals whereby to form a series of equally spaced bag sections, and as herein shown, the strip of bag forming material is intermittently drawn past the shaping and sealing mechanisms by a pair of driven rolls 30, 32, which are likewise formed in two sections spaced apart vertically to straddle the pipe 19 and to continue the vent opening in the transverse portion of the strip. The rollers 30, 32 are arranged to advance the strip one bag section each cycle of operation and to present the endmost bag section into operative relation to a cutter indicated at 34 arranged to sever the endmost bag section from the strip along a line disposed immediately to the rear of each transverse seal whereby the latter forms the end or bottom closure for the endmost bag section and the severed portion adjacent thereto forms the opening for the mouth of the succeeding bag section, thus forming individual bags open at the forward end to form the mouth of the bag and having an unsealed medial portion forming a vent opening at the trailing end or bottom of the bag. Thereafter, the mouth portions of successive individual bags are opened by bag opening and transferring means indicated generally at 36 arranged to draw the bag over an expansible mandrel 38, the latter preferably forming one of a plurality thereof carried by an intermittently rotatable spider 40 of the carton forming machine 41. As illustrated in Figs. 1 and 5 the pipe 19 terminates immediately in front of the cutter 34.

Referring now to Fig. 1, the present bag making and transferring section of the packaging machine may be driven in any convenient manner, and as herein shown through connections from a shaft 42 forming a part of the carton forming section of the machine. As herein shown, a bevel gear 44 fast on the shaft 42 meshes with a bevel gear 46 fast on a cam shaft 48, the latter being suitably journaled in bearing members 50 attached to the machine frame.

Provision is made for continuously unwinding the web 10 of bag forming material from the roll 12 thereof at a rate sufficient to permit the strip to be intermittently advanced by the feed rollers 30, 32, and as herein shown, the web 10 is continuously withdrawn by cooperating rollers 52, 54 arranged to be driven through connections from the shaft 48 including a sprocket 56, chain 58, sprocket 60 and cooperating gears 62 and 64, an idler sprocket 65 being provided to permit tightening of the chain 58. The cooperating roller 52 is arranged to be rotated through frictional engagement with the roller 54, and as herein illustrated, the roller 52 is carried by bearing members 66 which are mounted for vertical adjustment in a bracket 70, the proper adjustment being effected by hand screws 72. In order to take up the slack in the web effected by the continuous feeding of the material while the strip is at rest, the web 10 is arranged to pass under a weighted roller 74 which latter is axially movable in vertically slotted brackets 76. In order to permit a quick release of the upper feed roller 52 the latter may be rotatably mounted upon an eccentric shaft 53 provided with a handle 55 fast on one thereof whereby upon manual rocking of the eccentric shaft the roller is raised upwardly away from the roller 54 to facilitate the insertion of a new web of material between the rolls.

In the operation of the machine the web then passes over the flared V-shaped former 16 and between the vertical rollers 18, 20 arranged to shape and fold the web, as above described, to form a strip having a closed top and open bottom. The strip advancing rollers 30, 32, as best shown in Fig. 4, are arranged to be intermittently rotated to advance the strip one bag length each cycle of operation through connections including a cam 78 fast on the shaft 48 arranged to reciprocate a rack 80 connected to a cam lever 82 which carries a roller 84 cooperating with the cam 78. The rack 80 is arranged to cooperate with a pinion 86 rotatably mounted on a shaft 88 and has formed integrally therewith a pawl carrier disk 90 provided with pawls 92 arranged to engage a ratchet 94 fast on one end of the shaft 88. As herein shown, the rack 80 may and preferably will be held in meshing relation with its pinion by a guide bracket 96 rockingly mounted on the shaft 88. The other end of the shaft 88 is provided with a bevel gear 98 which meshes with a bevel gear 100 fast on the end of the vertical shaft 102 carrying the advancing roller 32. Each advancing roller 30, 32 is provided with an intermeshing gear 104, 106, as shown, to drive the rollers in unison.

In the operation of the strip advancing mechanism when the rack 80 is rocked upwardly through the connections above described the pinion 86 and pawl carrier 90 rotate idly on the shaft 88, the pawls 92 slipping over the teeth of the ratchet 94 during this stroke which comprises the idle period in the intermittent advancement of the strip. Conversely, when the rack 80 is rocked downwardly, the teeth of the ratchet are engaged by the pawls 92 to rotate the shaft 88 and effect rotation of the advancing rollers 30, 32, as above described.

Provision is made for separating the idler rollers 18, 20 and the strip advancing rollers 30, 32 to permit a strip of bag forming material to be inserted therebetween when a new roll thereof is

started through the machine and, as herein shown, one of each pair of rollers 18 and 30 is rotatably mounted upon an eccentric shaft 108. The upper end of each shaft 108 is provided with a handle 110 fast thereon and the handles are preferably connected as by a link 112 to permit simultaneous release of each roller from its cooperating roller. In operation, when a handle is rocked clockwise, viewing Fig. 1, the eccentric shafts are rocked in their bearings to effect rocking of the rollers 18, 30 away from their cooperating rollers.

From the description thus far it will be observed that the web of heat sealable bag forming material is folded longitudinally, and intermittently advanced through the machine, the advancing rollers 30, 32 being driven at a rate such as to effect advancement of the strip a distance of one bag length each cycle of operation. Referring now to Figs. 2 and 3, provision is made for heat sealing the bag forming material along predetermined zones during each rest period of the strip comprising a transverse zone 114 and a marginal longitudinal zone 116, the transverse section having a vent opening therein as described. Thus a complete bag section is formed during each cycle of operation to provide a series of connected bag sections.

As best shown in Fig. 3 one of the L-shaped sealing members comprising the heated member 24 is stationary, being mounted upon and insulated from a bracket 118 attached to the machine frame, the vertical leg of the L being open at its medial portion, as shown, to provide clearance for the pipe 19 and to form a vent between the sealed portions above and below the pipe. The cooperating sealing member 22, as herein shown, is formed in upper and lower sections corresponding to the spaced portions of the stationary sealing member 24 and is attached to a supporting bracket 120 formed integrally with an arm 122 pivotally mounted at 124 and which is arranged to be rocked to move the member 22 into and out of engagement with the heated member 24. Rocking movement of the arm 122 is effected through connections from a barrel cam 126 fast on the cam shaft 48 and include a cam lever 128 fast on a rocker shaft 130 and carrying a cooperating roller 132. The rocker shaft 130 which is journaled in brackets 134 attached to the machine frame is provided with toggle linkage including an arm 136 fast on the shaft 130 and a connecting arm 138 pivotally connected to the arm 122. A spring 140 attached to the toggle arm 136 holds the roller 132 against its cam to effect breaking of the toggle linkage to the left, viewing Fig. 3 when permitted by the cam 126 and thus rocking the member 22 away from the member 24 to permit the strip to be advanced during the strip advancing cycle of operation. When the strip comes to rest the cam 126 effects extension of the toggle linkage whereby to provide substantial pressure of the member 22 against its cooperating heat sealing member 24 to seal the strip as above described. The sealing member 22 may be adjustably mounted upon its supporting bracket 120 by screws 142 and nuts 144. Bent rods 146, 148 carried by the movable supporting bracket 120, and which extend under and upwardly in front of the strip, are provided for engaging and pulling away the sealed strip from the heated sealing member 24 when the member 22 is rocked whereby to prevent adherence of the strip to the heated sealing member 24.

In the preferred embodiment of the invention, provision is made for assuring that the sealing members 22, 24 are in their open or separated position when the machine is stopped and for this purpose, as herein shown, a solenoid operated hook 150 is arranged to engage a pin 152 carried by an arm 154 fast on the rocker shaft 130 to rock the latter in a clockwise direction, viewing Fig. 3, when the clutch is disengaged to stop the machine. As herein illustrated, the hook 150 is pivotally carried by a rockingly mounted arm 156, depending from the underside of the machine frame, and which is connected by a link 158 to the armature 160 of a solenoid 162. As shown in Fig. 3, the solenoid 162 is arranged to be energized upon closing of a switch 164 in a circuit 166 when a clutch handle 168 is moved to disengage the clutch 170 provided on the drive shaft 42. In operation, when the switch is closed to energize the solenoid 162, the hook 150 is moved to the left viewing Fig. 3 to rock the shaft 130 thus breaking the toggle linkage to the right to cause the presser member 22 to be moved away from its cooperating member 24 during the time the machine is at rest.

Referring now to Figs. 4 and 5, the cutting mechanism 34 for severing the endmost bag section from the strip at each cycle of operation comprises a pair of shear blades 172, 174 carried by a horizontal rod 176 extending longitudinally beneath the end of the strip and the collapsible mandrel 38, the rod 176 comprising a guide forming a part of the transferring mechanism to be hereinafter described. One of the shear blades 172 is stationary, being provided with a depending extension 178 attached to a rectangular guide bar 180 extending from the transferring mechanism. The movable blade 174 is arranged to be rocked through connections from a cam 182 fast on the cam shaft 48 and, as herein shown, the connections include a cooperating roller 184 carried by a lever 186 fast on a rocker shaft 188, a lever 190 also fast on the shaft 188, and a link 192 connecting the lever 190 to an arm 194 to which the shear blade 174 is attached. In the operation of the device the cutter is arranged to sever the endmost bag section at a point immediately to the rear of a transverse seal while the strip is at rest to form an open mouth bag section having a vent opening at the opposite end as described. A coil spring 196 on the shaft 176, held under compression by a collar 198, is provided to press the blades together in operative engagement.

Simultaneously with the severing operation or preferably immediately prior thereto the mouth portion of the endmost bag section is engaged by the bag opening and transferring mechanism 36 which is arranged to support the bag during and after severance thereof. Thereupon, the bag is carried forward and, as the bag is advanced, the mouth portion is opened up and the opened bag is drawn over the expansible mandrel 38 to be shaped into rectangular form in the subsequent operation of the packaging machine. The bag opening and supporting means is then returned to its initial position to grasp the mouth portion of the next succeeding bag section which has been advanced during the transferring operation. As above described, the air pipe 19 terminates just before it reaches the cutting mechanism 34, and in operation is arranged to blow a continuous stream of air through the vent opening and into the endmost bag section to separate the walls thereof preparatory to transferring the bag onto

the mandrel. The blower pipe 19 may be connected to any usual or preferred source of air such as an air pump, not shown, and may be controlled by a valve 21.

As best shown in Fig. 5, the bag supporting and transferring mechanism preferably comprises suction means including a plurality of pairs of opposed nozzles 200 extending from pipes 202 which are supported in arms 204 fast upon studs 206 rockingly mounted in a slide member 208. The lower ends of pipes 202 are connected by a flexible conduit 210 and vacuum is supplied to the nozzles through a flexible conduit 212 connected to a valve 214 attached to the machine frame. A conduit 216 leading from the underside of the valve 214 may be connected to any usual or preferred source of vacuum such as a vacuum pump, not shown. The valve 214 is arranged to be operated by a cam 218 cooperating with a roller 220 carried by one arm 222 of a bell crank pivotally mounted at 224. The other arm 225 of the bell crank is connected by a link 226 to the valve operating arm 228.

As herein shown, the slide member 208 is slidingly mounted for reciprocation upon the guide rod 176 and is maintained in a vertical position by the provision of a grooved portion 209 on the underside thereof arranged to embrace the rectangular bar 180 as clearly shown in Fig. 5. The lower end of each rocker stud 206 is provided with an arm 230 carrying rollers 232 arranged to cooperate with a stationary cam piece 234. The ends of the arms 230 are connected by a spring 236 to hold the rollers against the cam. With this construction it will be seen that when the slide is advanced the rollers 232 following the stationary cam piece 234 cause the opposed suction nozzles 200 to be separated to effect opening of the mouth portion as described.

As illustrated herein, the slide member 208 is reciprocated through connections from a cam 240 including a cooperating cam roller 242 carried by a lever 244 fast on a rocker shaft 246, lever 248 also fast on the shaft 246, and which is connected by a link 250 to a lever 252 pivoted at 254, and a link 256 connecting the lever 252 to the slide member. In the operation of the device when the slide member 208 is in its fully retracted position the suction nozzles 200 engage opposed sides of the endmost bag section and the vacuum valve 214 is then opened to effect adherence of the bag to the nozzles. Upon severance of the bag section the bag is transferred to the mandrel as above described and when the slide member is in its fully extended position the vacuum valve 214 is closed to release the bag from the nozzles whereupon the slide member is returned to its retracted position.

In the operation of the machine prior to and during the transferring operation a continuous stream of air may be directed through the vent opening and into the endmost bag section to permit separation thereof by the suction members 200 in engagement with the outer surfaces of the side walls. In practice, the longitudinal medial portions of the side walls of the bag are bulged out slightly in passing over the pipe 19 to provide a continuous vent in alignment with the unsealed portion of the transverse seal and communicating with the open mouth portion of the bag. In passing between and beyond the feed rollers 30, 32 and beyond the end of the pipe 19, this bulged out relationship between the walls is continued due to the relatively fixed or set position of the bag material after passing over the pipe and also because of the engagement of the vertically spaced portions of the rollers 30, 32 with the upper and lower portions of the strip and the stream of air being blown through the endmost bag section through the pipe 19. Thus, when the bag is grasped by the suction nozzles 200 above and below the longitudinal medial portion the bulged out relationship is maintained to continue the vent opening. Thereafter the cutting mechanism 34 is operated to sever the endmost bag section, and upon rocking of the blade 174 out of cutting position, the blower pipe 19 may continue to direct air into the vent opening 23 during the transfer of the bag onto the collapsed mandrel, as above described. It will be understood that after the severing operation the vent opening 23 may remain partially open due to the relatively set position of the side walls after passing over the pipe 19 and which is maintained in such position by the suction members 200. Thus, in one aspect of the invention, the vent opening alone in communication with the atmosphere may be sufficient to permit separation of the side walls by the suction members during the transferring operation. However, in practice it is preferred to continue the stream of air in the direction of the vent opening after severance of the endmost bag section from the strip to assure separation of the side walls. While it is preferred to provide a continuous stream of air, in practice, the valve 21 may be controlled by a cam if desired to discontinue the stream of air during the severing operation.

Upon transference of the bag onto the collapsed mandrel 38 the latter is expanded during subsequent movement of the intermittently operated spider 40 of the carton forming machine to the next station of operation to square up the flat bag into rectangular form, and, when the mandrel comes to rest at this station provision may be made for sealing the vent opening 23 in the end of the bag. As herein shown, this may be accomplished by a pair of presser members 300, 302 one of which may be heated. The presser members 300, 302 are carried by arms 304, 306 respectively mounted on vertical shafts 308, 310 connected to be rocked simultaneously in opposed directions by cooperating gears 312, 314. The arms 304, 306 are arranged to be rocked into and out of pressing engagement with the extended unsealed portion of the bottom seam by a cam 315 fast on an extended portion of the cam shaft 48 and through connections including a bell crank, one arm 316 of which carries a cam roller 318 cooperating with the cam, and the other arm 320 of which is connected by a link 322 to an arm 324 fast on the vertical shaft 308.

From the description above it will be seen that the present bag forming apparatus is adapted to produce a flat bag of heat sealable material such as "Plyofilm" provided with face to face marginal seams whereby to produce a bag which may be used to advantage in the production of an hermetically sealed container for dehydrated foods or the like. It will also be observed that the present bag opening and transferring mechanism may be used with advantage for supporting and transferring other types of flat bags into a desired operative position.

While the preferred embodiment of the invention has been herein illustrated and described it will be understood that the invention may be embodied in other forms within the scope of the following claims.

Having thus described the invention, what is claimed is:

1. In a bag forming mechanism, in combination, an expansible mandrel, container forming means comprising means for forming a flat bag having an open mouth portion and provided with an unsealed portion forming a vent in the opposite end of the bag, said container forming means being disposed with relation to the mandrel to support the formed bag in substantial alignment with said mandrel, bag opening means cooperating with said bag forming means and arranged to engage opposed side walls of the flat bag to spread them apart, means for drawing the opened bag onto the mandrel, and means for directing a stream of air through said vent and between the side walls of the bag to facilitate separation thereof during the opening operation.

2. In a packaging machine, in combination, an expansible mandrel, means for supporting a flat bag in alignment with said mandrel, said bag having an open mouth portion and provided with an unsealed portion forming a vent in the opposite end of the bag, means for opening and transferring the bag onto said mandrel including means arranged to engage opposed side walls of the flat bag to spread them apart, means for directing a stream of air through said vent and between the side walls of the bag to permit separation thereof during the opening operation, and means for moving said bag engaging means to effect opening of the bag and for drawing the bag onto said expansible mandrel.

3. In a packaging machine, in combination, an expansible mandrel, means for supporting a flat bag in alignment with said mandrel, said bag having an open mouth portion and provided with an unsealed portion forming a vent in the opposite end of the bag, means for opening and transferring the bag onto said mandrel including suction means arranged to engage opposed side walls of the flat bag to spread them apart, means for directing a stream of air through said vent and between the side walls of the bag to permit separation thereof during the opening operation, and means for moving said bag engaging means to effect opening of the bag and for drawing the bag onto said expansible mandrel and means for sealing said vent while the bag is disposed on said mandrel.

4. In a bag forming machine, in combination, bag forming means comprising means for folding a web of bag forming material longitudinally to form a U-shaped strip, means for sealing the strip transversely at spaced intervals and along the open marginal edges of said strip to form a series of connected bag sections, said sealing means being constructed and arranged to incompletely seal the strip transversely to provide an unsealed portion forming a vent therein, means for intermittently advancing the strip a distance of one bag length each cycle of operation, a cutter for severing successive endmost bag sections to form individual flat bags each having an open mouth portion and provided with an unsealed portion forming a vent opening in the opposite end thereof, bag opening means cooperating with said bag forming means and arranged to engage opposed side walls of the flat bag to spread them apart, and means comprising an air pipe disposed longitudinally of and within the U-shaped strip and having its end terminating adjacent said cutter for directing a stream of air through said vent and between the side walls of the endmost bag to facilitate separation thereof during the opening operation, said air pipe being of a sufficient size to provide a bulge in the side walls of the bag.

5. In a packaging machine, in combination, bag forming means comprising means for folding a web of bag forming material longitudinally to form a U-shaped strip, means for sealing the strip transversely at spaced intervals and along the open marginal edges of said strip to form a series of connected bag sections each having an unsealed portion forming a vent in said transversely sealed portions, means for intermittently advancing the strip a distance of one bag length each cycle of operation, a cutter for severing successive endmost bag sections to form individual flat bags each having an open mouth portion and provided with an unsealed portion forming a vent opening in the opposite end thereof, bag opening means cooperating with said bag forming means and arranged to engage opposed side walls of the flat bag to spread them apart, and means including an air pipe passing between the folds of said strip and through said unsealed portions for directing a stream of air through said vent and between the side walls of the bag to facilitate separation thereof during the opening operation.

6. In a machine of the character described, in combination, bag forming means comprising means for folding a web of bag forming material longitudinally to form a U-shaped strip, an air pipe passing between the folds of said strip, feed rollers for intermittently advancing the strip a distance of one bag length each cycle of operation and arranged to straddle said air pipe, sealing means comprising a pair of L-shaped cooperating presser members arranged to provide a transverse seal at spaced intervals and a longitudinal marginal seal, the vertical leg of said L being spaced to straddle said pipe and to provide an unsealed portion in said transverse seal, a cutter for severing successive endmost bag sections to form individual flat bags each having an open mouth portion and provided with an unsealed portion forming a vent in the opposite end thereof, bag opening means cooperating with said bag forming means and arranged to engage opposed side walls of the flat bag to spread them apart, said air pipe terminating adjacent said cutter and being arranged to direct a stream of air through said vent and between the side walls of the bag to permit separation thereof during the opening operation.

7. In a machine of the character described, in combination, bag forming means comprising means for folding a web of bag forming material longitudinally to form a U-shaped strip, an air pipe passing between the folds of said strip, feed rollers for intermittently advancing the strip a distance of one bag length each cycle of operation and arranged to straddle said air pipe, sealing means comprising a pair of L-shaped cooperating presser members arranged to provide a transverse seal at spaced intervals and a longitudinal marginal seal, the vertical leg of said L being spaced to straddle said pipe and to provide an unsealed portion in said transverse seal, a cutter for severing successive endmost bag sections to form individual flat bags each having an open mouth portion and provided with an unsealed portion forming a vent in the opposite end thereof, bag opening means cooperating with said bag forming means including suction members engageable with opposed side walls of the flat bag at points above and below the line of communication between said vent and the mouth of

the bag prior to the severing operation, means for moving said suction members to effect opening of the bag, said air pipe being arranged to direct a stream of air through said vent and between the side walls of the bag prior to and during the opening operation.

8. In a machine of the character described, in combination, means for supporting a flat bag having an open mouth portion at one end of the bag and provided with an interrupted transverse seal to provide an unsealed portion forming a vent in the opposite end of the bag, bag opening means arranged to engage opposed side walls of the flat bag to spread them apart, means for directing a stream of air through said vent and between the side walls of the bag to facilitate separation thereof during the opening operation, an expansible mandrel upon which the opened bag is drawn and means for subsequently sealing said vent opening while the bag is disposed on the mandrel.

9. In a bag forming machine, in combination, container forming means comprising means for forming a flat bag and means for effecting an incomplete transverse seal at one end thereof to provide a flat bag having an open mouth portion at one end of the bag and an unsealed portion forming a vent in the opposite end of the bag, bag opening means cooperating with said bag forming means arranged to engage opposed side

walls of the flat bag to spread them apart, and means including a longitudinally extended element of less width than a flat bag disposed in a position to extend between the side walls of the flat bag during the forming operation and means holding said walls together on opposite sides of said element for shaping portions of the side walls of the bag to provide a relatively narrow distended passageway between the mouth portion of the bag and said unsealed portion whereby to admit air between the side walls to facilitate separation thereof during the bag opening operation.

JOHN G. VERGOBBI.

REFERENCES CITED

The following references are of record in the file of this patent:

UNITED STATES PATENTS

Number	Name	Date
1,780,142	Becker et al.	Oct. 28, 1930
1,789,281	Becker et al.	Jan. 13, 1931
2,145,941	Maxfield	Feb. 7, 1939
2,177,919	Vogt	Oct. 31, 1939
2,245,675	Hultin	June 17, 1941
2,272,530	Patterson	Feb. 10, 1942
2,324,393	Hohl	July 13, 1943
2,326,931	Dalton et al.	Aug. 17, 1943
2,446,798	Vergobbi	Aug. 10, 1948