(19) Europäisches Patentamt
European Patent Office
Office européen des brevets

(11) EP 1 642 730 A1

(12) EUROPEAN PATENT APPLICATION

(43) Date of publication:
05.04.2006 Bulletin 2006/14

(51) Int Cl.:
B41J 11/00 *(2006.01)* ***B41J 11/06*** *(2006.01)*

(21) Application number: **05108842.5**

(22) Date of filing: **26.09.2005**

(84) Designated Contracting States:
AT BE BG CH CY CZ DE DK EE ES FI FR GB GR HU IE IS IT LI LT LU LV MC NL PL PT RO SE SI SK TR
Designated Extension States:
AL BA HR MK YU

(30) Priority: **04.10.2004 EP 04104860**

(71) Applicant: **Océ-Technologies B.V.**
5914 CC Venlo (NL)

(72) Inventor: **Kruijt, Pieter G.M.**
5641 HE, Eindhoven (NL)

(74) Representative: **Janssen, Paulus J. P.**
Océ-Technologies B.V,
Corporate Patents,
P.O. Box 101
5900 MA Venlo (NL)

(54) Ink jet printer

(57) An ink jet printer comprising: a sheet support plate having suction holes (24) formed in a sheet support surface thereof; a sheet advance mechanism adapted to advance a sheet (12) step-wise in a sheet advance direction (A) over the sheet support surface; and an imaging system adapted to form an image by depositing liquid ink on the sheet (12), the ink being allowed to dry-out while the sheet is advanced over the sheet support plate, wherein the suction holes (24) are arranged such that their influence on the ink drying process is essentially uniform over the whole area of the image.

Fig. 3

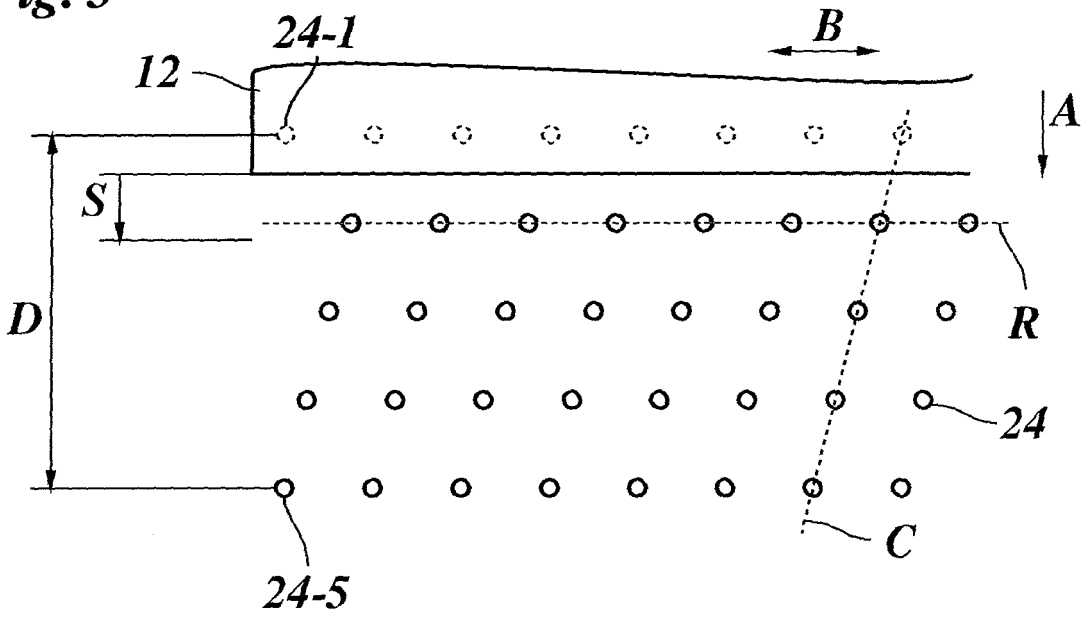

EP 1 642 730 A1

Description

[0001] The invention relates to an ink jet printer comprising:

- a sheet support plate having suction holes formed in a sheet support surface thereof;
- a sheet advance mechanism adapted to advance a sheet step-wise in a sheet advance direction over the sheet support surface; and
- an imaging system adapted to form an image by depositing liquid ink on the sheet, the ink being allowed to dry-out while the sheet is advanced over the sheet support plate.

[0002] In an ink jet printer, a sheet support plate comprising suction holes is frequently used for supporting an image receiving sheet and holding the sheet flat on the sheet support plate. By applying a subatmospheric pressure via the suction holes to the bottom side of the sheet, the sheet may be sucked against the top surface of the sheet support plate. The suction holes should be evenly distributed over the surface area of the sheet support plate, so that an essentially uniform suction is applied to the sheet. On the other hand, in view of manufacturing considerations, the number of suction holes should not be too large.

[0003] EP-A 0 409 596 discloses a printer wherein the suction holes are arranged in a regular, non-slanting pattern, with the suction holes of neighboring rows being offset fron one another by one half pitch.

[0004] It is an object of the invention to improve the image quality of images printed with an ink jet printer of the type indicated above.

[0005] This object is achieved with the features indicated in claim 1.

[0006] According to the invention, the suction holes are arranged such that their influence on the ink drying process is essentially uniform over the whole area of the image.

[0007] The invention is based on the observation that the suction holes may retard or accelerate the ink drying process, and that this may have a visible effect on the printed image.

[0008] For example, in a hot-melt ink jet printer, a sheet, e. g. a sheet of paper, is advanced over the sheet support plate while the image is being printed. At room temperature, the hot-melt ink is solid, and it is therefore necessary that the ink is heated in the printer above its melting point, before it can be jetted onto the paper. In order to obtain a suitable and constant amount of spreading of the ink, the temperature of the sheet support plate and hence the temperature of the paper is controlled such that the ink cools down at an appropriate rate. However, at the positions of the suction holes, the properties of the sheet support plate, especially its heat conduction and its heat capacity, differ from the surrounding parts of the plate. Thereby, heat dissipation is reduced at sheet portions that are positioned above the suction holes. This has negative effects on the scattering of light, the scratch resistance and the glossiness of the printed image. Especially the difference in glossiness is visible in the printed image.

[0009] Similarly, in an ink jet printer in which the ink drying process involves evaporation of a solvent, the flow of air drawn-in through the suction holes may give rise to an accelerated evaporation of the solvent.

[0010] If the suction holes are arranged in a regular pattern of rows and columns, with the columns extending in sheet advance direction, then certain areas of the printed image will repeatedly pass over the suction holes of a column, whereas the intervening portions of the image will never be affected by the suction holes. As a result, differences in glossiness and the like are visible as a regular pattern on the printed image. For this reason, the invention proposes to arrange the suction holes such that essentially all portions of the image will pass over the suction holes an approximately equal number of times and will thus be affected by the suction holes in essentially the like manner.

[0011] A suitable arrangement would for example be a random distribution of the suction holes over the area of the sheet support plate. However, in terms of production efficiency, a regular pattern of suction holes is preferred. Then, the object of the invention can be achieved by a slanting pattern in which the columns of suction holes form an angle with the sheet advance direction. As a result, an image portion that has passed over one suction hole will not pass over the next or the next few suction holes of the same column, because these suction holes are laterally offset. After a certain number of advance steps, of course, said image portion may pass over a suction hole of a neighboring column. However, the pattern may be arranged such that, until then, the ink has already died-out to a sufficient extent and will no longer be affected by the presence of the suction hole.

[0012] Useful details of the invention are indicated in the dependent claims.

[0013] The pattern of suction holes may be adapted to the length of the sheet advance steps such that for any two suction holes that are aligned in sheet advance direction, the mutual distance of the suction holes in sheet advance direction is a non-integral multiple of the step length. As a result, when an image portion has rested over a suction hole for a certain time in the interval between two sheet advance steps, this image area will not come to rest over the next suction hole after the next advance step, but will be offset from that hole in sheet advance direction. Thus, as long as the ink has not dried sufficiently, any point of the printed image will either rest over a suction hole only once or will never rest over a suction hole at all, but no point of the image will rest over a suction hole several times, and this may assure a sufficient uniformity of the ink drying process.

[0014] The suction holes may be arranged in rows, preferably in equidistant rows, that are, for example, per-

pendicular to the sheet transport direction. This is particularly useful in a hot-melt ink jet printer in which the sheet support plate is temperature-controlled by means of a fluid circulated therethrough.

[0015] Preferred embodiments of the invention will now be described in conjunction with the drawings in which:

Fig. 1 is a schematic perspective view of a hot-melt ink jet printer;

Fig. 2 is a partial cross section of a sheet support plate in the printer shown in Fig. 1; and

Figs. 3 to 5 are a partial top views of a sheet that is advanced over suction holes of the sheet support plate.

[0016] As is shown in Fig. 1, a hot-melt ink jet printer comprises a platen 10 which is intermittently driven to rotate in order to advance a sheet 12, e. g. a sheet of paper, in a direction indicated by an arrow A over the top surface of a sheet support plate 14. A number of transport rollers 16 are rotatably supported in a cover plate 18 and form a transport nip with the platen 10, so that the sheet 12, which is supplied from a reel (not shown) via a guide plate 20, is paid out through a gap formed between an edge of the cover plate 18 and the surface of the sheet support plate 14.

[0017] A carriage 22 which includes a number of ink jet printheads (not shown) is mounted above the sheet support plate 14 so as to reciprocate in the direction of arrows B across the sheet 12. In each pass of the carriage 22, a number of pixel lines are printed on the sheet 12 by means of the printheads which eject droplets of hot melt ink onto the sheet in accordance with image information supplied to the printheads. For the sake of simplicity, guide and drive means for the carriage 22, ink supply lines and data supply lines for the printheads, and the like, have not been shown in the drawing.

[0018] The top surface of the sheet support plate 14 has a regular pattern of suction holes 24 which pass through the plate and open into a suction chamber 26 that is formed in the lower part of the plate 14. The suction chamber is connected to a blower 28 which creates a subatmospheric pressure in the suction chamber, so that air is drawn-in through the suction holes 24. As a result, the sheet 12 is sucked against the flat surface of the support plate 14 and is thereby held in a flat condition, especially in the area which is scanned by the carriage 22, so that a uniform distance between the nozzles of the printheads and the surface of the sheet 12 is established over the whole width of the sheet, and a high print quality can be achieved.

[0019] The droplets of molten ink that are jetted out from the nozzles of the printheads have a temperature of 100° C or more and cool down and solidify after they have been deposited on the sheet 12. Thus, while the image is being printed, the heat of the ink must be dissipated with a sufficient rate that should be essentially uniform for the whole area of the sheet 12. To dissipate the heat, the temperature of the sheet 12 is controlled via the sheet support plate 14 by means of a temperature control system 30 which circulates a temperature control fluid, preferably a liquid, through the plate 14. The temperature control system includes a circulating system with tubes 32 that are connected to opposite ends of the plate 14. One of the tubes passes through an expansion vessel 33 containing a gas buffer for absorbing temperature-dependent changes in the volume of the liquid. As will be readily understood, the temperature control system 30 includes heaters, temperature sensors, heat sinks, and the like for controlling the temperature of the fluid, as well as a pump or other displacement means for circulating the fluid through the interior of the sheet support plate 14.

[0020] The sheet support plate 14, which has been shown in cross-section in Fig. 2, is made of a material, such as a metal, having a relatively high heat conductivity and also a relatively high heat capacity. A number of elongated cavities 34 are formed in the interior of the plate 14 so as to extend in parallel with one another and in parallel with the direction (B) of travel of the carriage 22 between opposite ends of the plate 14, where they are connected to the tubes 32 through suitable manifolds. Each cavity 34 is delimited by a top wall 36, a bottom wall 38 and two separating walls 40. The top walls 36, together, define the top surface 42 of the plate 14 which is machined to be perfectly flat. Between each pair of two separating walls 40, which delimit to adjacent cavities 34, a hollow space 44 is formed, through which the suction holes 24 pass through into the suction chamber 26. Since the suction holes 24 are arranged in a slightly slanting pattern, as is shown in Figs. 1 and 3, only one of the suction holes 24 can be seen in section in Fig. 2.

[0021] Fig. 3 shows the pattern in which the suction holes 24 are arranged in the surface of the sheet support plate 14. These suction holes form a regular pattern with rows R and columns C. The rows R extend in parallel with the direction B and hence also in parallel with the cavities 34 formed in the interior of the sheet support plate 14 (Fig. 2). However, the columns C are inclined relative to the sheet advance direction A.

[0022] In the example shown, the pattern of suction holes 24 repeats itself every five rows, so that, for example, the suction hole 24-1 in the first row is aligned in the sheet advance direction A with the suction hole 25-5 in the fifth row.

[0023] Also shown in Fig. 3 is the leading edge of the sheet 12 which has been advanced in the direction A and is now held stationary on the sheet support plate while the carriage 22 (Fig. 1) travels across the sheet in order to print another swath of image pixels. The hot-melt ink that has been deposited on the sheet 12 is cooled through contact with the sheet support plate 14 with an appropriate cooling rate. However, in the area of the suction holes

24 of the first row, the cooling rate is reduced, because, there, the sheet is not in contact with the metal plate 14 which has a high heat conductivity.

[0024] When the carriage 22 has completed its travel, the sheet 12 is advanced again by one step to the position shown in Fig. 4 and is then again held stationary for printing the next swath of the image. The length S of the sheet advance step has been indicated in Fig. 4. Dark spots 24a in Fig. 4 symbolize those areas of the sheet 12 which had covered the suction holes 24 of the first row in the condition shown in Fig. 3 and for which, consequently, the ink has not been cooled to the same extent as for the rest of the sheet. Since the cooling rate of the ink will also be somewhat decreased at the edges of the suction holes 24, the diameter of the spots 24a may in practice be slightly larger than the diameter of the suction holes 24.

[0025] Thanks to the inclination of the columns C, the spots 24a in Fig. 4 are laterally offset from the suction holes 24 of the second row and do not overlap with these suction holes in sheet advance direction A.

[0026] When the sheet 12 rests in the position shown in Fig. 4, similar spots, for which the cooling rate is decreased, will also be formed on and around the suction holes 24 of the second row. However, since the cooling rate decays exponentially with time, the spots caused by the suction holes of the second row will be somewhat less pronounced.

[0027] In the further course of the print process, the sheet 12 is advanced step-wise with the step width S, and in each step, the suction holes of the first row will cause another row of spots 24a, and the suction holes in the second and subsequent rows will cause somewhat fainter spots.

[0028] Fig. 5 shows the condition reached when the sheet 12 has been advanced by 5 steps and indicates the spots 24a caused by the suction holes of the first row and also the spots 24b caused by the suction holes in the second, third and fourth row. It can be seen in the lower part of figure 5 that these spots 24a, 24b are non-overlapping and are practically uniformly distributed over the surface of the sheet 12, so that the influence of the suction holes on the cooling rate of the ink is practically uniform over the area of the sheet 12 and will hardly produce any visible effect.

[0029] As is further shown on the left margin of the sheet 12 in Fig. 5, the suction hole 24-5 in the fifth row does not overlap with the spot 24a-1 that has been created by the suction hole 24-1 in the state shown in figure 3. The spot 24a-1 is offset from the suction hole 24-5 in sheet advance direction A. This is due to the fact that the distance D between the suction holes 24-1 and 24-5 in Fig. 3 is a non-integral multiple of the step width S. Thus, although the suction holes 24-1 and 24-5 are aligned in sheet advance direction A, the spot 24a-1 does not come to rest on the suction hole 24-5, so that the cooling process for the ink in this spot will not be retarded once again by the suction hole 24-5.

[0030] In a practical embodiment of the printer, the step width S may be variable and will change when the printer is switched into another print mode, e. g. from a single-pass mode into a two-pass mode. However, since the number of possible step widths S is limited, and the step widths are known in advance, it is possible to select the distance D such that the condition that D is a non-integral multiple of S is fulfilled for all possible step widths.

[0031] In a modified embodiment, especially in an embodiment in which the columns C are not inclined relative to the sheet advance direction A, the distance D (which would then be the distance between to adjacent rows R) may be smaller than the step width S. In this case, the additional condition that S is a non-integral multiple of D should be fulfilled in order a avoid overlapping spots. For example, if the step width S is 17†mm, and the diameter of the suction holes 24 is 1.0 mm, then the distance D may be selected as 12 mm. Then, it would only be after 12 sheet advance steps that the spot created by the first suction hole would overlap with another suction hole for the first time. During these 12 steps, the ink has had time enough to cool down, so that it would no longer be affected by the second suction hole.

Claims

1. An ink jet printer comprising:

- a sheet support plate (14) having suction holes (24) formed in a sheet support surface (42) thereof;
- a sheet advance mechanism (10, 16) adapted to advance a sheet (12) step-wise in a sheet advance direction (A) over the sheet support surface (42); and
- an imaging system (22) adapted to form an image by depositing liquid ink on the sheet (12), the ink being allowed to dry-out while the sheet is advanced over the sheet support plate (14), wherein the suction holes (24) are arranged such that the influence of the suction holes on the ink drying process is essentially uniform over the whole area of the image,

characterized in that

- the suction holes (24) are arranged in a regular, slanting pattern of rows (R) and columns (C), with the columns (C) being inclined relative to the sheet advance direction (A) such that an image portion (24a-1) that has passed over one suction hole (24-1) will not pass over the next few suction holes of the same column nor over a suction hole of a neighboring column before the ink has died-out to such an extent that it will no longer be affected by the presence of the suction hole.

2. The ink jet printer of claim 1, wherein the smallest distance (D) between two suction holes (24-1, 24-5) that are aligned in sheet advance direction (A) is a non-integral multiple of a step width (S) with which the sheet (12) is advanced.

3. The ink jet printer of any of the preceding claims, wherein the suction holes (24) are arranged in rows (R) that are perpendicular to the sheet advance direction (A).

4. The ink jet printer of any of the preceding claims, comprising a temperature control system (30) for controlling the temperature of the sheet support plate (14).

5. The ink jet printer of claims 3 and 4, wherein the sheet support plate (14) has internal cavities (34) extending in the plane of said plate in a direction perpendicular to the sheet advance direction (A), and the temperature control system (30) is adapted to circulate a temperature control fluid to said cavities.

6. The ink jet printer of any of the preceding claims, the printer being a hot-melt ink jet printer.

Fig. 1

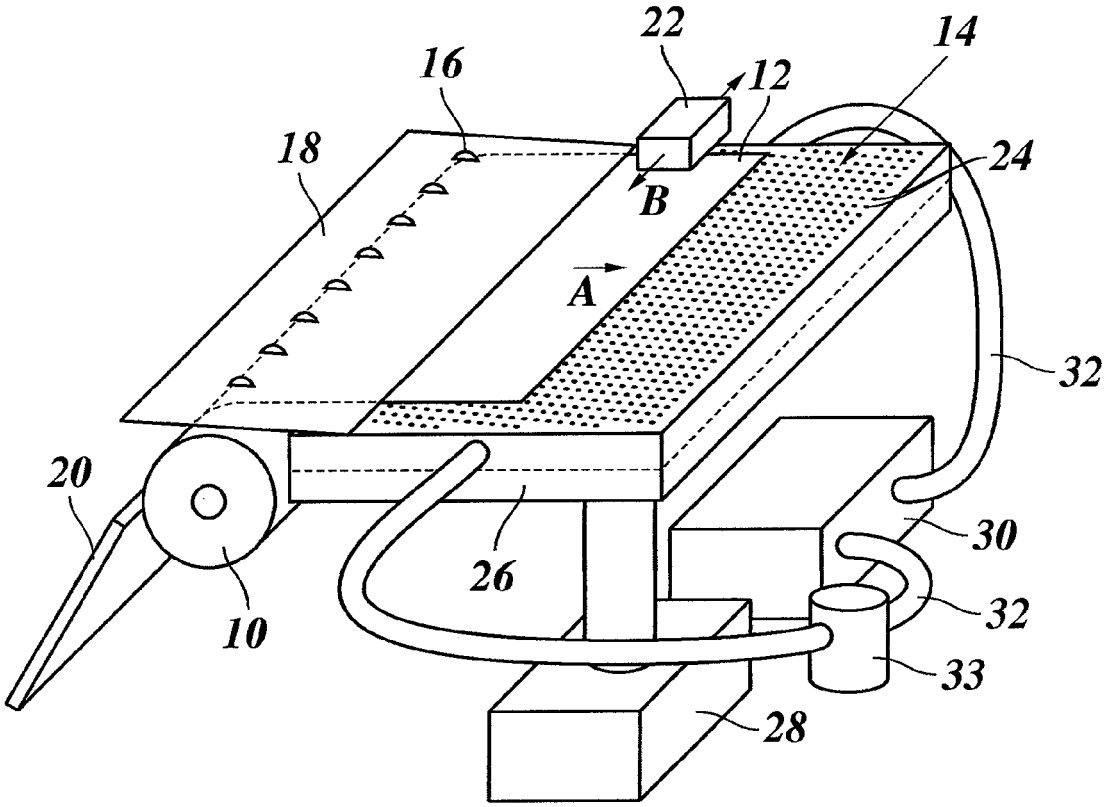
22
14
16
12
18
24
B
A
32
20
30
26
32
10
33
28

Fig. 2

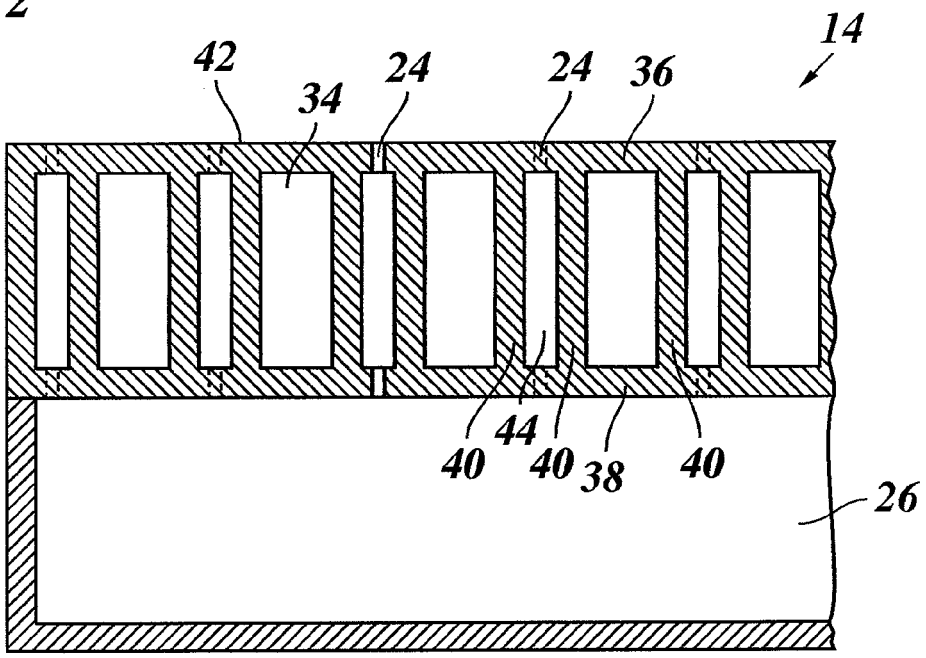
14
42
24
24
36
34
40
44
40
38
40
26

Fig. 3

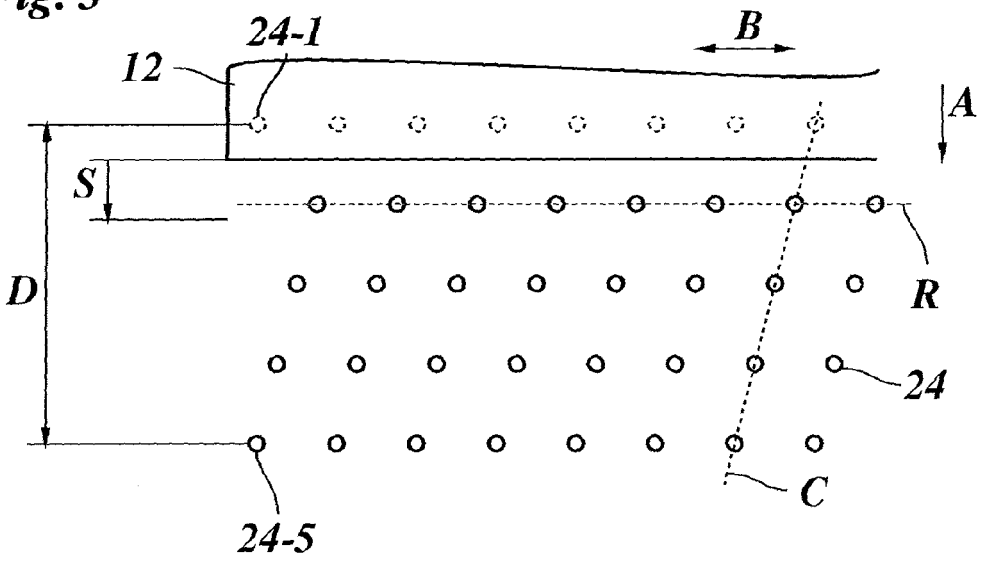

Fig. 4

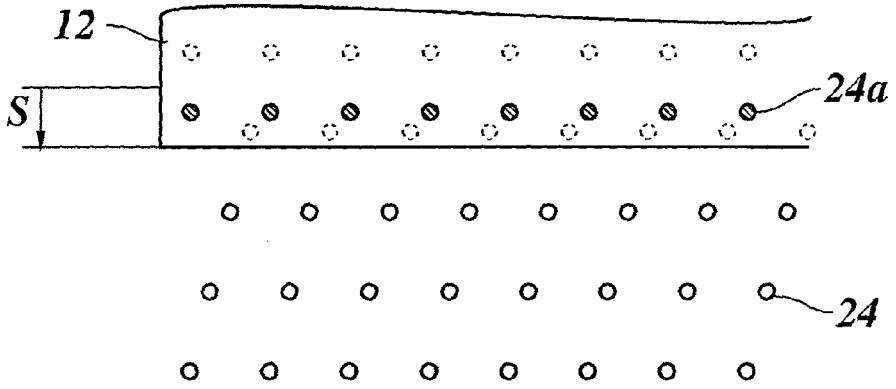

Fig. 5

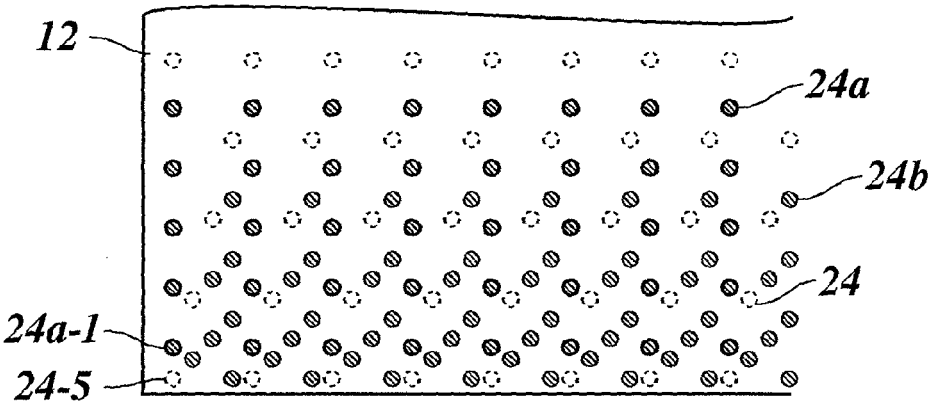

European Patent Office

EUROPEAN SEARCH REPORT

Application Number
EP 05 10 8842

DOCUMENTS CONSIDERED TO BE RELEVANT

Category	Citation of document with indication, where appropriate, of relevant passages	Relevant to claim	CLASSIFICATION OF THE APPLICATION (IPC)
X Y	EP 0 409 596 A (SEIKO INSTRUMENTS INC) 23 January 1991 (1991-01-23) * column 3, line 35 - column 4, line 13; figure 3 *	1-3,6 4,5	B41J11/00 B41J11/06
X	US 2002/167578 A1 (MIKI MOTOHARU ET AL) 14 November 2002 (2002-11-14) * paragraph [0024]; figures 8,9 *	1,3	
A	EP 1 449 669 A (NORITSU KOKI CO., LTD) 25 August 2004 (2004-08-25) * column 4, paragraph 12-14; claim 1 *	1,3	
Y	US 2002/071016 A1 (WOTTON GEOFF ET AL) 13 June 2002 (2002-06-13) * claims 1,2,4 *	4,5	
A	US 4 269 586 A (RONAYNE ET AL) 26 May 1981 (1981-05-26) * claim 1 *	4,5	
			TECHNICAL FIELDS SEARCHED (IPC) B41J B65C

The present search report has been drawn up for all claims

Place of search	Date of completion of the search	Examiner
The Hague	20 January 2006	Joosting, T

CATEGORY OF CITED DOCUMENTS

X : particularly relevant if taken alone
Y : particularly relevant if combined with another document of the same category
A : technological background
O : non-written disclosure
P : intermediate document

T : theory or principle underlying the invention
E : earlier patent document, but published on, or after the filing date
D : document cited in the application
L : document cited for other reasons

& : member of the same patent family, corresponding document

EPO FORM 1503 03.82 (P04C01)

ANNEX TO THE EUROPEAN SEARCH REPORT ON EUROPEAN PATENT APPLICATION NO. EP 05 10 8842

This annex lists the patent family members relating to the patent documents cited in the above-mentioned European search report. The members are as contained in the European Patent Office EDP file on
The European Patent Office is in no way liable for these particulars which are merely given for the purpose of information.

20-01-2006

Patent document cited in search report	Publication date	Patent family member(s)	Publication date
EP 0409596 A	23-01-1991	DE 69009876 D1	21-07-1994
		DE 69009876 T2	22-09-1994
		JP 3029352 U	22-03-1991
		US 5124728 A	23-06-1992
US 2002167578 A1	14-11-2002	NONE	
EP 1449669 A	25-08-2004	CN 1517209 A	04-08-2004
		JP 2004216653 A	05-08-2004
		US 2004169711 A1	02-09-2004
US 2002071016 A1	13-06-2002	NONE	
US 4269586 A	26-05-1981	NONE	

EPO FORM P0459

For more details about this annex : see Official Journal of the European Patent Office, No. 12/82