PCT WORLD INTELLECTUAL PROPERTY ORGANIZATION
International Bureau

INTERNATIONAL APPLICATION PUBLISHED UNDER THE PATENT COOPERATION TREATY (PCT)

(51) International Patent Classification 4 :		(11) International Publication Number:
G07D 3/02	A1	WO 87/ 05729
		(43) International Publication Date: 24 September 1987 (24.09.87)

(21) International Application Number: PCT/SE87/00102

(22) International Filing Date: 4 March 1987 (04.03.87)

(31) Priority Application Number: 8601117-8

(32) Priority Date: 11 March 1986 (11.03.86)

(33) Priority Country: SE

(71) Applicant *(for all designated States except US):* SCAN COIN AB [SE/SE]; Jägershillgatan 26, S-213 75 Malmö (SE).

(72) Inventors; and
(75) Inventors/Applicants *(for US only) :* NILSSON, Bengt, Göran [SE/SE]; Oxievångsvägen 452, S-230 30 Oxie (SE). LINDAHL, Bengt, Göran [SE/SE]; Vikingavägen 12 B, S-223 77 Lund (SE).

(74) Agents: STRÖM, Tore, V. et al.; Ström & Gulliksson AB, Box 4188, S-203 13 Malmö (SE).

(81) Designated States: AT (European patent), BE (European patent), BR, CH (European patent), DE (European patent), DK, FR (European patent), GB (European patent), IT (European patent), JP, LU (European patent), NL (European patent), NO, SE (European patent), US.

Published
With international search report.

(54) Title: COIN ASSORTING DEVICE

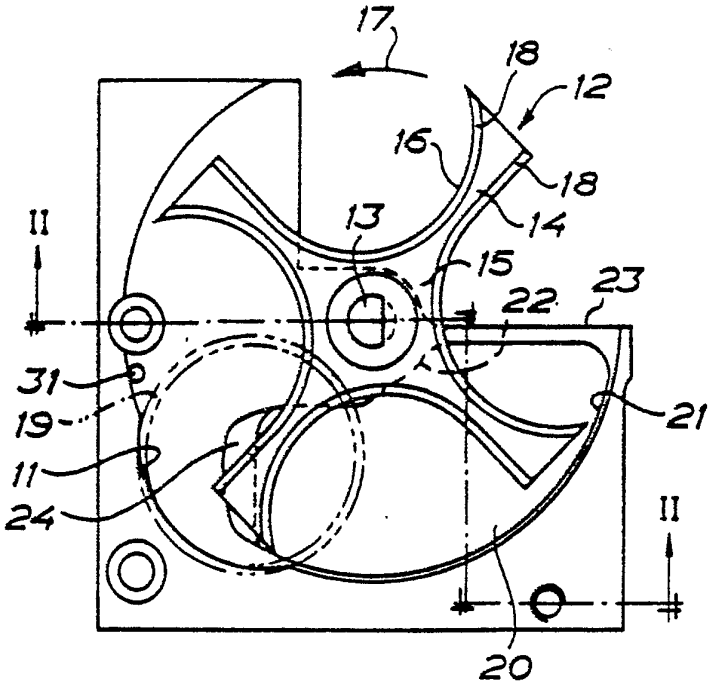

(57) Abstract

Coin assorting device comprising a disc (12) mounted for rotation on a bottom plate (10) to pass below a coin supply tube (19). The rotatable disc includes two pairs of recesses (16) for receiving a coin in each recess, said bottom plate having a discharge opening (20) for coins the diameter of which is less than a predetermined maximum diameter of the coin supplied. Said discharge opening (20) extends beneath the mouth of said coin supply tube (19) and is shaped with an upper chamfered edge (24). Opposite sides of the wings (14) of the rotatable disc (12) are shaped in the form of blunt edges having a thickness which substantially corresponds to the thickness of the thinnest occurring coin. Means are further associated with the rotatable disc (12) for reversing the rotational movement of said disc over a portion of a revolution when a stop has occurred and then automatically switching over for driving in the normal rotational direction.

FOR THE PURPOSES OF INFORMATION ONLY

Codes used to identify States party to the PCT on the front pages of pamphlets publishing international applications under the PCT.

AT	Austria	**FR**	France	**ML**	Mali
AU	Australia	**GA**	Gabon	**MR**	Mauritania
BB	Barbados	**GB**	United Kingdom	**MW**	Malawi
BE	Belgium	**HU**	Hungary	**NL**	Netherlands
BG	Bulgaria	**IT**	Italy	**NO**	Norway
BJ	Benin	**JP**	Japan	**RO**	Romania
BR	Brazil	**KP**	Democratic People's Republic of Korea	**SD**	Sudan
CF	Central African Republic			**SE**	Sweden
CG	Congo	**KR**	Republic of Korea	**SN**	Senegal
CH	Switzerland	**LI**	Liechtenstein	**SU**	Soviet Union
CM	Cameroon	**LK**	Sri Lanka	**TD**	Chad
DE	Germany, Federal Republic of	**LU**	Luxembourg	**TG**	Togo
DK	Denmark	**MC**	Monaco	**US**	United States of America
FI	Finland	**MG**	Madagascar		

COIN ASSORTING DEVICE

The invention relates to a coin assorting device comprising a disc mounted for rotation on a bottom plate to pass, when rotating, below a coin supply tube and forming recesses arranged in pairs diametrically opposite each other, for receiving a coin from the coin supply tube in each recess, said bottom plate having a discharge opening for coins the diameter of which is less than a predetermined maximum diameter of the coins supplied.

Coin assorting means of this type are used in coin assorting machines for a so called second sorting of the coins. Then, the coins of an unassorted coin body are first subject to a first sortening, wherein the coins one after the other are allowed to roll along a sloping path and in dependence of the size of the coin diameter are diverted therefrom in one of a number of stations, where the coins are allowed to fall into coin tubes, the inside diameter of which is adjusted to the diameter of the coins to be received therein. In the coin tube the coins will form a pile which accordingly should include only coins of one and the same diameter. It is completely precluded and it is a technical impossibility that a coin the diameter of which is larger than the diameter of coins to be collected in the tube, could be included in the coin pile. However, it cannot be precluded that a coin or two having a smaller diameter appear in the coin pile from time to time. When the coins are diverted from the sloping path it may in fact happen that a coin which is diverted at the proper station brings along a smaller coin running in parallel with said coin, when falling down into the coin tube. Even if such anomalies in sortening the

coins are rectified by said second sortening applied for many years, it nevertheless happens from time to time that a small parallel-running coin which has fallen down into the coin tube, causes cramping between the coins and the lower edge of the coin tube. There is a particular risk of such cramping in such cases when the diameter and thickness of said incorrect coin are small. When such cramping has occurred in coin assorting devices of the kind previously known, it may be necessary to stop the coin assorting machine, disassemble the coin tube and then manually remove the coin which has caused the cramping.

A main object of the present invention thus is to reduce, in coin assorting devices of the kind mentioned initially, the risk that interruption in the operation caused by cramping should happen. In case cramping caused by an incorrect small coin nevertheless should occur, still another object of the invention is to remove this interruption of the operation by automatically during a short sequence reversing the rotational movement of the rotatable disc and by striking action against the coin eliminate the cramping and then automatically revert to the initial rotational direction at the same time discharging coins.

According to the invention the objects mentioned above are achieved by designing the coin assorting device in accordance with the characteristic features specified in the appended claims.

In order to explain in more detail the invention an embodiment thereof will be described with reference to the accompanying drawings, in which

Fig 1 is a plan view of the coin assorting device,

Fig 2 is a cross sectional view taken along the broken dot-and-dash line II-II in fig 1,

Fig 3 illustrates very schematically an arrangement for automatically, during a short sequence, cause the rotational disc to rotate in the opposite direction in order to eliminate cramping that has occurred, and

Figures 4 and 5 illustrate diagrammatically two situations in which cramping may occur.

The coin assorting device comprises a bottom plate 10, which should be fixedly mounted in a coin assorting machine. This bottom plate has on the upper side thereof a milled recess 11, with a flat bottom in which a disc 12 is rotatably mounted by means of a drive shaft 13. The rotatable disc 12 has four wings 14 which project from a hub 15 and are separated from each other by means of substantially semicircular recesses 16. The intended rotational direction of the disc is indicated by an arrow 17, and the edges of the recesses 16 are provided with a chamfer 18, so that each wing 14 is chamfered on the front edge thereof, as seen in the rotational direction, as well as on the opposite edge.

A coin tube 19 connects to the upper side of the disc 12 rotatable in the bottom plate 10, said tube being arranged to receive coins from a device for a first sortening. Thus, when the disc 12 is rotating, it passes below the lower end of the coin tube 19. The disc 12 should preferably have a maximum thickness which equals the thickness of the coins to be received by the coin tube 19, such that the disc when rotating past the lower end of the coin tube 19 will bring along the coin which at each occasion is the lowermost coin of a coin pile in the coin tube, when a recess 16 passes the coin tube 19. The chamfer 18

on the front and rear edges of the wings 14 is shaped to form a blunt edge, said blunt edge preferably having a height which substantially corresponds to the thickness of the smallest coin. In the milled recess 11 having a flat bottom there is formed a discharge opening 20, which is defined by two circular edges 21 and 22, the center of which is located on the rotational axis of the disc 12. These two edges are radially spaced from each other a distance which is somewhat less than the diameter of the coins to be received by the coin tube 19, such that these coins resting on narrow portions at each of the edges 21 and 22 can pass the discharge opening 20 when they are brought along by the rotatable disc 12, then to be supplied to a suitable collection means for these coins at an edge 23 of the bottom plate. A coin, if any, having less diameter than the intended diameter of the coins in the coin pile received by the coin tube 19, will be discharged, however, by falling down through the opening 20 in order ro be collected at another location. In accordance with the prersent invention the opening 20 in the bottom plate 10 extends beneath the mouth of the coin tube 19. The dimensions of the portion of the opening 20 which extends beneath the lower end of the coin tube 19 are preferable such that the distance between opposite limiting borders of the opening 20 does not coincide with the diameter of any known coin which might be present in the coin tube. The major portion of the limiting border of the opening 20 which extends beneath the coin tube is further provided with a chamfer 24, which further facilitates for incorrect coins to fall down into the through opening 20 at an early stage.

Fig 3 schematically illustrates an arrangement for automatically, when cramping between two coins

and the lower edge of the coin tube has occurred, induce a reversed rotational direction of the rotatable disc during a short sequence corresponding to half a revolution, in order to loosen the cramping grip of the coins, and then immediately bring the rotatable disc to rotate in the initial rotational direction at the same time dischaging coins. A transmission sheave 25 for a transmission belt, e.g. an O-ring 26, is mounted on the downwardly projecting portion of the drive shaft 13 of the rotatable disc 12. A shaft 27 which also is provided with a corresponding transmission sheave 25, is rotatably mounted in bearings in parallel with the drive shaft 13. Said two transmission sheaves 25 form together with the O-ring 26 a transmission for driving the shaft 27 for rotation synchronously with the drive shaft 13. Supported by shaft 27 is also a thin disc 28 provided with a periferal through opening 29. Mounted close to the disc 28 is an optical fork-shaped sensor 30, the branches of said fork being disposed one above and the other beneath the disc 28. One of the branches of the fork is provided with means for emitting a light beam vertically through the opening 29, and the opposite branch of the fork is provided with means for registering said light beam. When the rotatable disc 12 rotates, one signal for each revolution is obtained. If an expected signal fails to come i.e. when the rotation of the rotatable disc 12 is prevented e.g. by cramping, the optical sensor 30 is adapted to trigger a control signal to the drive motor for said disc 12 for reversing the rotational direction during a predetermined period which approximately corresponds to half a revolution, and then agin to reverse the rotational direction back to normal direction. When cramping has occurred between

two coins and the lower edge of the coin tube 19, the rotatable disc 12 is thus made to rotate in the opposite direction, the rear edge of the wing 14 then by striking action against the coin drives the coin back thus changing the relative positions of the coins so that when the rotatable disc again starts to rotate in its normal rotational direction, the wing 14 manages to discharge the lowermost coin. To prevent that the coin by backwards striking movement is displaced too long a distance backwards, a pin 31 is fixed to the bottom plate, said pin limiting the backwards movement of the coin.

Figures 4 and 5 illustrate two different situations involving a certain risk of cramping of coins against the lower edge of the coin tube 19.

Fig 4 illustrates a case in which an incorrectly sorted small coin 32 has landed on the feeding plate 10 beneath a correct coin 33. Usually this situation does not lead to any major problem since the chamfered front edge of the wing 14 when said wing rotates only brings along the small coin 32, which after forwarding falls down through the opening 20, after which the following wing 14 brings along the coin 33. It may happen, however, that both coins 32 and 33 are displaced in direction forwards and then are cramped below the coin tube 19. If this happens, the rotatable disc is made to reverse in the manner described above, resulting in that the rear chamfered edge of the wing 14 strikes against the front edge of the coin 33 thereby displacing said coin in the rearward direction so that the relative position between coins 32 and 33 is changed. At the following feeding action by means of wing 14, only coin 32 is fed to the opening 20, the following wing 14 then discharging the correct coin 33.

In the situation schematically illustrated in fig 5 the incorrectly sorted small coin 32 is situated on top of the correct coin 33, which rests on the bottom plate 10. In normal cases this situation does not lead to any problems either. The wing 14 thus feeds only the correct coin 33, the incorrect coin 32 then falling down into the opening 20. However, if cramping should occur aginst the lower edge of the coin tube 19, the reversing action described above will occur, resulting in a relative displacement between the coins 32 and 33, coin 32 then falling down into the opening 20, after which the correct coin 33 is fed by means of the wing 14.

CLAIMS

1. Coin assorting device comprising a disc (12) mounted for rotation on a bottom plate (10) to pass, when rotating below a coin supply tube, said disc forming two pairs of recesses (16) diametrically opposite each other in each pair, for receiving a coin from the coin supply tube in each recess, said bottom plate having a discharge opening (20) for coins, the diameter of which is less than a predetermined maximum diameter of the coins supplied, c h a r a c t e r i z e d in that the discharge opening (20) in the bottom plate (10) extends beneath the mouth of said coin supply tube (19).

2. Coin assorting device as claimed in claim 1, c h a r a c t e r i z e d in that the portion of the discharge opening (20) of the bottom plate which extends beneath the coin tube (19), at least on a portion of its extension is shaped with an upper chamfered edge (24).

3. Coin assorting device as claimed in claims 1 or 2, c h a r a c t e r i z e d in that the wings (14) of the rotatable disc (12) as well on the side thereof facing the normal rotational direction as on the opposite side thereof forms a blunt edge, having a thickness which essentially corresponds to the thickness of the thinnest occurring coin.

4. Coin assorting device as claimed in claim 3, c h a r a c t e r i z e d in that each of said wings (14), on the side thereof which is directed in the normal rotational direction as well on the opposite side thereof, is chamfered (18) on its upper side to form said blunt edge.

5. Coin assorting device as claimed in any of the preceding claims, c h a r a c t e r i z e d in that

a rotational detector (28, 29, 30) is associated with the rotatable disc (12), said rotational detector, when a stop of the normal rotational direction has occurred, emitting a control signal to a drive motor for driving the rotatable disc to reverse the rotational movement over a part of a revolution, and then automatically switching over for driving in the normal rotational direction.

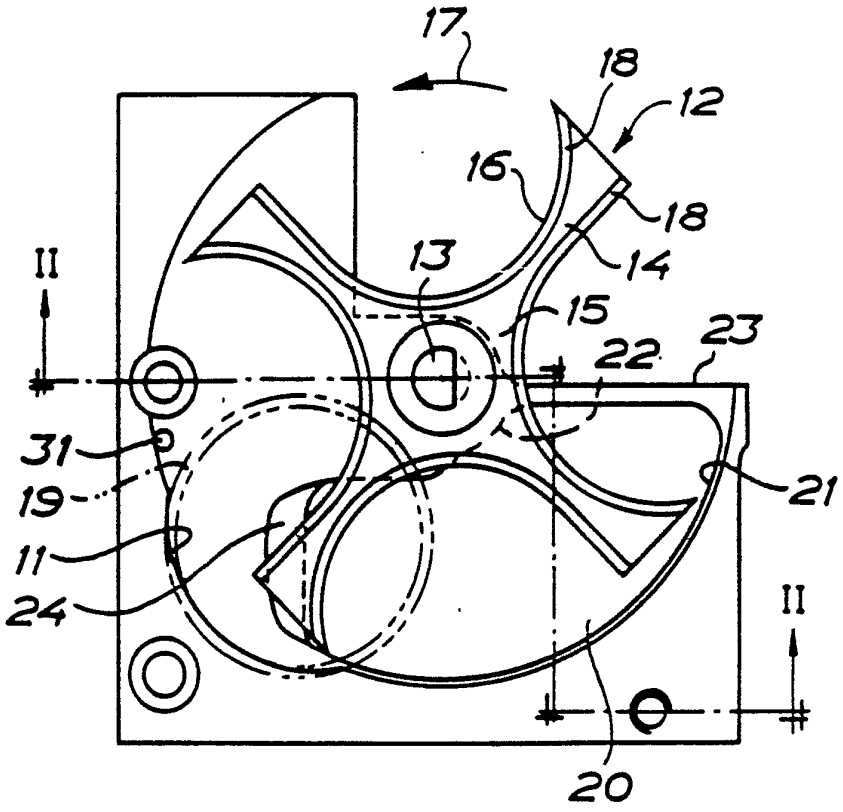

FIG. 1

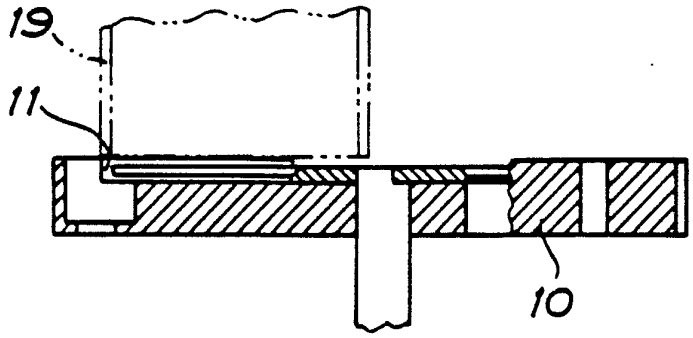

FIG. 2

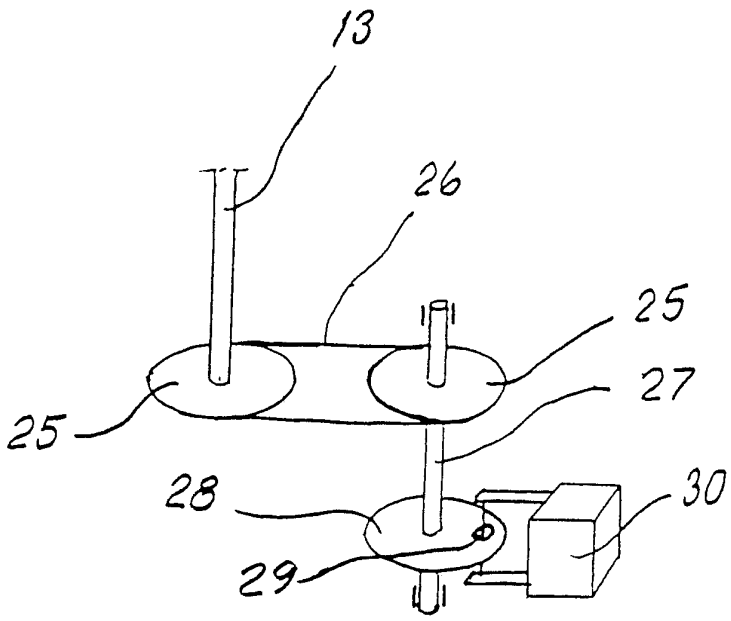

Fig 3

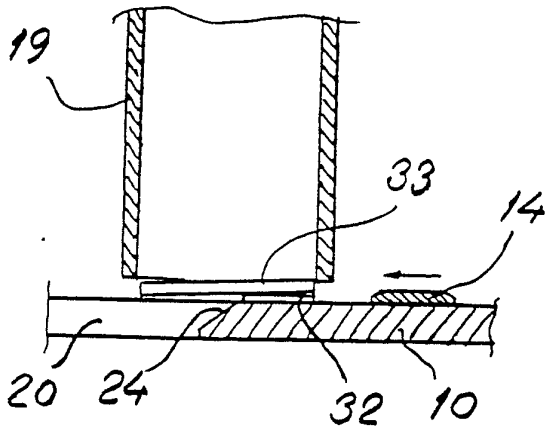

Fig 4

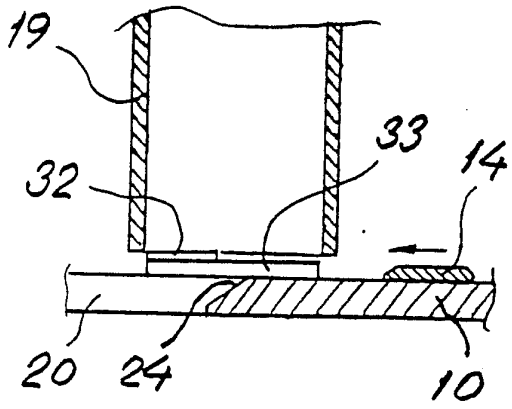

Fig 5

INTERNATIONAL SEARCH REPORT

International Application No PCT/SE87/00102

I. CLASSIFICATION OF SUBJECT MATTER (if several classification symbols apply, indicate all) [6]

According to International Patent Classification (IPC) or to both National Classification and IPC

4

G 07 D 3/02

II. FIELDS SEARCHED

Minimum Documentation Searched [7]

Classification System	Classification Symbols
IPC	G 07 D 3/00, /02, /06, /16, 9/00, /04, /06
US Cl	133:3, 8

Documentation Searched other than Minimum Documentation to the Extent that such Documents are Included in the Fields Searched [8]

SE, NO, DK, FI classes as above

III. DOCUMENTS CONSIDERED TO BE RELEVANT [9]

Category *	Citation of Document, [11] with indication, where appropriate, of the relevant passages [12]	Relevant to Claim No. [13]
X	FR, A, 761 390 (COMPAGNIE FRANÇAISE DE MACHINEOUTILES DE PRECISION) 17 March 1934	1

* Special categories of cited documents: [10]

"A" document defining the general state of the art which is not considered to be of particular relevance

"E" earlier document but published on or after the international filing date

"L" document which may throw doubts on priority claim(s) or which is cited to establish the publication date of another citation or other special reason (as specified)

"O" document referring to an oral disclosure, use, exhibition or other means

"P" document published prior to the international filing date but later than the priority date claimed

"T" later document published after the international filing date or priority date and not in conflict with the application but cited to understand the principle or theory underlying the invention

"X" document of particular relevance; the claimed invention cannot be considered novel or cannot be considered to involve an inventive step

"Y" document of particular relevance; the claimed invention cannot be considered to involve an inventive step when the document is combined with one or more other such documents, such combination being obvious to a person skilled in the art.

"&" document member of the same patent family

IV. CERTIFICATION

Date of the Actual Completion of the International Search	Date of Mailing of this International Search Report
1987-05-11	1987 -05- 18
International Searching Authority	**Signature of Authorized Officer**
Swedish Patent Office	Bo Gustavsson

L.E