May 2, 1950 A. A. JOHNSON 2,505,972

AIR OPERATED GUN

Filed Dec. 1, 1944

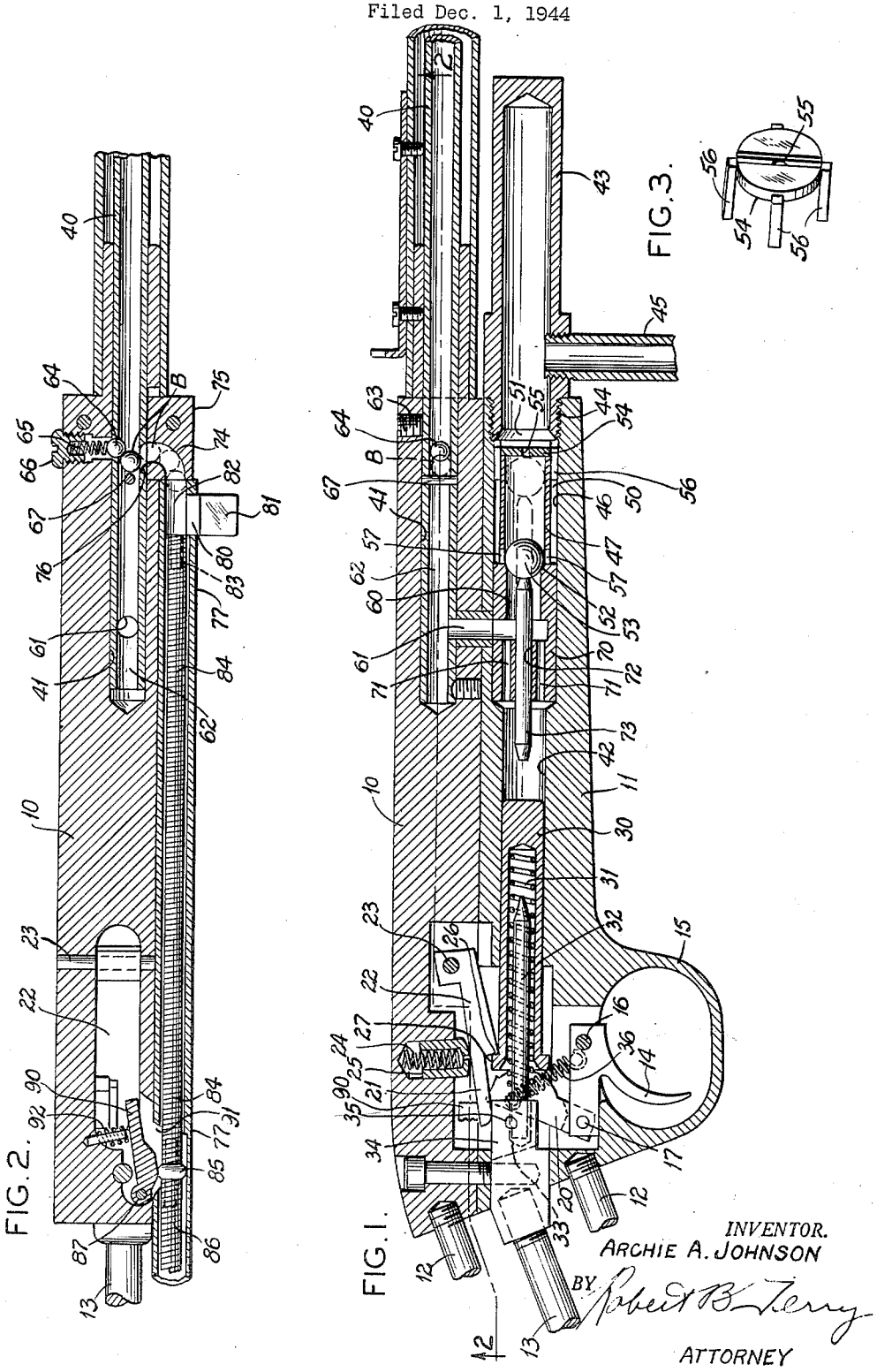

FIG. 1.

FIG. 2.

FIG. 3.

INVENTOR.
ARCHIE A. JOHNSON
BY Robert B. Terry
ATTORNEY

Patented May 2, 1950

2,505,972

UNITED STATES PATENT OFFICE

2,505,972

AIR OPERATED GUN

Archie A. Johnson, St. Louis, Mo., assignor to Harry W. Davies, St. Louis, Mo.

Application December 1, 1944, Serial No. 566,101

2 Claims. (Cl. 124—11)

1

This invention relates to improvements in air operated guns, and more particularly to pneumatically actuated arms, whether of rifle or pistol type, in which the projectile is impelled by a charge of air or other fluid, preferably, but not necessarily, from a constant source of fluid supply.

During the past several years numerous designs of air operated guns have been proposed, principally for practice and training purposes, and general target work, as for use in shooting galleries and practice ranges. Only a few of such designs have either attained or remained in a status of commercial success for any length of time, and as far as is known, all of the models heretofore commercially offered have been characterized by complicated mechanism and a requirement of frequent service attention and adjustment. None of the pneumatic guns as far as is known, has heretofore attained the dependability in service which characterizes fire arms, such as rifles or pistols of the types employing cartridges and explosive propellant charges. The present design is the result of a number of months of careful experimentation, and a reasonable period of successful commercial use, from which it is clearly apparent that the present design overcomes many if not all of the many objections to former types of pneumatic practice arms. This accordingly forms a major and general objective of the present invention.

A further and important object of the invention is attained in a simplified, rugged, dependable, practically service-free design of pneumatic rifle or pistol, and one which may be used for protracted periods, even through many thousands of rounds of firing without requiring any service attention.

Yet another object of the invention is attained in an improved air-cocking mechanism in which the propulsive fluid, air for example, is employed in an exceedingly simplified mechanism, for the dual purposes of shot propulsion and of recycling or recocking the gun mechanism.

Yet another object of the invention which is or may be attained in conjunction with the next foregoing objective, is the utilization of the air supplied under pressure as a source of propellant energy, and also for controlling the duration of opening of a firing valve.

A still further objective is attained in a simplified and compact arrangement of parts in a breech and forearm structure, which serves to reduce machine work in production; which makes for an unusual ease of assembly, and ease of service attention when required, which conduces as well to light weight, and unusually good balance, particularly when the improvements are employed in a gun which is supplied with an air line or the like, connected to a constant source of air under pressure.

2

The foregoing and numerous other objects of the invention will more clearly appear from the following detailed description of an exemplary embodiment of the invention as applied to a rifle, particularly when the description is considered in connection with the accompanying drawing, in which:

Fig. 1 is a vertical longitudinal sectional elevation in a plane including the axis of the gun bore, and showing the general arrangement of operating mechanism and parts;

Fig. 2 is a sectional elevation taken in a horizontal plane, and showing certain of the elements as same would appear when viewed along line 2—2 of Fig. 1, looking in the direction of the arrows, and

Fig. 3 is an isometric view of an air-throttling disc, which serves also as a head element for the firing valve cylinder.

Referring now by characters of reference to the drawing, the breech structure comprised primarily of major parts 10 and 11, is shown only in those portions essential to illustrate and describe the present improvements, the forepart of the barrel, the stock and other parts being omitted as unessential to a full understanding of present improvements. It should further be noted that both the pneumatic and mechanical features of the gun are adapted for use in many types of practice arms, particularly in both pistols and rifles of semi-automatic or automatic type.

Referring first to the fire control mechanism and immediately appurtenant elements, there are provided at the rear of the breech structure 10 and 11, preferably a pair of dowel elements 12 which interfit with suitable recesses in the stock (not shown). For securement of the breech structure to the stock, an extension rod or bolt 13 is employed. Facultative control of fire is effected through a trigger 14, about which is a trigger guard 15, the trigger being pivoted on a cross pin 16 and pivotally connected through a pin 17 to a lever 20, the latter being pivotally supported by a cross pin in the breech mechanism. The lever 20 has a camming action on a projecting tail piece 21 of the sear 22, the latter being pivoted by means of a cross pin 23, and being biased, downwardly in Fig. 1, by a spring 24 disposed in a suitable drilled socket in element 10, and bear-

ing against and internally of a spring cup 25, the latter engaging the upper surface of sear 22 as will be apparent.

The downwardly presented shoulder on sear 22, shown at 26, serves when the mechanism is in cocked position, to abut an annular shoulder of a perimetric projection 27 at the rear end of a combined bolt and piston element 30. Internally of the bolt is a bolt spring of relatively heavy coil compression type, and shown at 31. In assembly this spring is positioned in part by a pin 32 which is of slightly less external diameter than the internal diameter of spring 31, and so serves as a guide and positioning element for the spring. The pin 32 is mounted by projection of its rearmost end into a socket 33 formed in a rear block element 34 and retained in the socket by a pin 35. It is a preference, as shown, to form the socket 33 of slightly larger diameter than the end of pin 32 received therein, in order to permit a slight accommodating movement of pin 32. This has been found conducive to prevention of any cramping or binding of the spring or pin, within the hollow bore of the bolt and piston piece 30.

The action of the fire control mechanism will be at once apparent, following the foregoing description of its parts, but it may be noted that lever 20 is normally biased forwardly as by a spring 36 anchored, as shown, to lever 20 at one end and secured to a fixed pin at its opposite end. Assuming bolt 30 to be in cocked position as shown, and bolt spring 31 under compression, it will be obvious that rearward movement of trigger 14, as for firing, will lift the rear end of the trigger, and through its connection by the pin 17 to the lever 20 impart a lifting movement to lever 20. The latter coacting in camming engagement with the sear tail 21, will actuate sear 22 about pivot 23, and as soon as shoulder 26 clears the projection 27 of the bolt, the bolt will be impelled sharply forwardly by the spring. Upon return of the bolt to cocked position, this being brought about by air pressure as later described, it will be obvious that the projection or shoulder 27 will ride under the wide part of sear 22, and that upon full return of the bolt upon recycling of the mechanism, the sear will be depressed by spring 24, retaining the bolt until a subsequent trigger pull.

Proceeding now to the more strictly pneumatic elements of the mechanism, it will readily appear from Fig. 1 that practically all elements of the gun except the firing mechanism per se, are carried in a pair of parallel bores, the upper of these being generally referred to as containing a gun barrel 40 the breech end of which is set into a bore 41 in breech element 10. The second such bore, formed largely in breech element 11, is indicated at 42. It is preferred for compactness to align the air pressure mechanism as far as possible in the bore 42 and to keep this bore as close as possible to bore 41. Identified either with an end or as an extension of bore 42, there will first be noted a cylindrical container 43, threaded as at 44 into the breech element 11. Although air or other fluid under pressure may be supplied to the chamber in the receiver 43, it is preferred to provide an air connection 45 connected through a flexible tube (not shown) to an air tank or other source of supply. Proceeding inwardly of the bore 42, a portion is indicated at 46, which contains a firing valve cylinder 47, the diameter of which, as will appear, is appreciably less than the diameter of the surrounding portion of bore 42 so as to provide longitudinal air passages 50 which

are directed from the discharge end 51 of the receiver to a bevelled valve seat 52. This seat, except at times of firing, is closed by a piston valve shown in the form of a hardened steel ball 53.

Formed as a separable part of, but immediately associated with the cylinder 47 is a throttling disc 54 provided with a restricted central aperture 55, which establishes, as is now apparent, a passageway for air from the end 51 of the receiver to the space or chamber within cylinder 47. It will appear that air under pressure will normally fill cylinder 47 behind the valve 53, and that this pressure will be substantially the same as that maintained in the receiver 43. Retention of the cylinder head or disc 54 in position between the cylinder body 47 and the end of the receiver structure, is accomplished in part by the provision of spacing fingers, several of which are provided, and indicated at 56. The passages 50 intervene the several fingers 56 so that the latter constitute no appreciable obstruction to free flow of air from the end 51 of the receiver around the cylinder 47.

Although the piston valve 53 is shown, as preferred, in the form of a hardened ball, and may consist conveniently of a steel ball bearing element, the piston valve may with good results also be formed as a cylindrical element (not shown), one end margin of which is bevelled to conform to the valve seat 52.

The primary or major air passage for delivery of the propulsion air charge to the firing chamber, as will appear, includes passage portions 51, 50 and valve seat 52 as thus far described, the end of cylinder 47 in the region of the valve being apertured so as to permit of free passage of air through the valve seat, the apertures being indicated at 57. Beyond the valve seat 52 the primary air passage is continued axially of the lowermost bore, through a short passage portion 60, and beyond this zone the principal air passage is continued through a short vertical passage generally indicated at 61, whence air is conducted directly to the firing chamber 62 formed in the rear end of the barrel tube 40. In the region of the firing chamber, the tube 40 is conveniently secured as by a set screw 63 in the bore 41 of breech element 10.

In the example presently illustrated, it is contemplated to employ pressure from a relatively constant air supply source, such as a compressor tank (not shown) and to employ as shot, steel spheres such as small ball bearings, indicated at B. In utilizing rounds of this form, a supply of shot is retained by the magazine structure later to be described, and is fed therefrom, as later described, into the forward end of the firing chamber. In order to position the round in the rear of the bore of barrel 40 prior to its propulsion, there is provided a forward shot stop, best seen in Fig. 2 as preferably consisting of a ball element 64 releasably retained in an aperture somewhat too small to pass the ball completely, by a spring 65 retained by a threaded plug 66. A rear shot stop consists of a cross pin, shown as vertically disposed, and indicated at 67. The firing chamber may be considered as that portion rearwardly of stop 64 in the tubular barrel element 40.

The bore 42 has an axially drilled plug element 70 fixed therein just rearwardly of said cylinder 47. This plug element is in abutting relation at its rear with an annular shoulder formed in said bore, and its foremost end abuts the cylinder sleeve 47, the head element or disc 54 of which

abuts the bevelled end of the receiver 43, so that, upon threading the receiver element 43 into member 11, as at 44, there are positioned in assembly the cylinder sleeve 47, its head 54 and the plug element 70.

The plug piece 70 is transversely drilled through one of its wall portions to communicate with and provide a continuation of the passage 61. Thus the major or primary air passage for the propulsion air charge is now seen to include ports or passages 51, 50, 52, 60 and 61, and to terminate in the firing chamber 62.

Besides forming certain portions of the air passages as described, the plug 70 is drilled or otherwise apertured or bored to provide a plurality, two of which are shown, of relatively smaller passages 71. It is preferred that the aggregate cross sectional area of passages 71 be somewhat less than the smallest sectional area of the major air passage, so as to provide for a relatively reduced and somewhat delayed flow of air through passages 71, which, as will now appear, are directed into and serve at the time of opening of valve 53 to supply air to a cylinder constituted of a rearmost portion of the bore 42, and in which the bolt 30, as will readily appear, may be lapped, and operates as a piston between limits, the rearmost of which is in its cocked position as shown (Fig. 1), and the forward limit identified with a position just short of plug 70. The plug 70 serves a further purpose, in that it is centrally or axially drilled or otherwise provided with a bore 72 of such a diameter as to receive and to provide a slidable working clearance with an impact pin or firing pin 73. This latter is preferably provided with blunt end faces as will appear, and the end faces are somewhat reduced in diameter as shown. The pin or impact element 73 is mounted in floating relation between the valve 53 and the end face of the piston-bolt structure 30, and its length is appreciably less than the distance between these elements when the valve is closed and the piston bolt is in cocked position, as shown.

Referring now to a simplified and preferred form of shot magazine adapted to retain a substantial number of rounds, the shot or projectile B, as has been briefly noted, will be fed into the firing chamber between pin 67 and shot stop 64, and by preference for optimum angle of introduction of each of the rounds to firing position, there is provided a widely or gradually curved elbow end of the shot feed passage, indicated at 74, this passage being formed in a small block element 75, and the barrel sleeve 40 being drilled to provide a slightly reentrant or backturned portion constituting the terminus of the shot magazine, as indicated at 76. Rearwardly of and feeding into the elbow passage 74, is a magazine tube 77 which is provided over the forward portion of its length with a narrow lateral slot (not shown), to accommodate a finger piece 80 and a projection 81 thereon, both of which are conveniently formed as part of the shot abutment 82. This latter is provided with a tail projection 83, to which is secured a somewhat flexible but only slightly compressible magazine spring of coil type shown at 84, this latter being of a diameter just slightly less than the internal diameter of tube 77. The spring 84 continues rearwardly to a lockout device shown as consisting of a nodular element in the nature of a cam 85. The piece 85 is provided with front and rear projections, to the former of which is securely anchored the end of spring 84 and to the latter of which is

anchored a second magazine spring 86, which functionally serves as a continuation of spring 84. The tube 77 and spring 86 may be continued rearwardly for a length consistent with the desired shot capacity of the magazine, and may, if desired, be extended back into a chamber or bore portion of the stock (not shown).

It being understood that Fig. 2 is taken in a horizontal plane, looking upwardly, there will now be described the function of the lockout device, including the projection 85. In Fig. 2 the magazine is shown as empty, or substantially so, at any rate requiring replenishment prior to further operation of the gun. Pivoted on a short vertical pin 87 is a camming lever 90 shaped so that it may at times extend into a lateral slot 91 of the adjacent portion of the magazine tube 77, into which slot the lever 90 is normally biased as by a spring 92. When, however, the magazine is exhausted of shot to the extent that the projection 85, acting on the camming surface of lockout lever 90, forces this lever upwardly (as shown in Fig. 2) the lever end overrides sear 22, thus preventing the normal firing and lifting movement of the sear, until the projection 85 is again brought out of the path of lever 90. The action of the magazine and its function will have become apparent, but it may be noted that there is provided a suitable loading port (not shown) near the outer end of magazine tube 77, and that loading is effected by insertion, say with the aid of a loading tube directed into said port, of the predetermined number of rounds. Incident to loading, finger piece 80—81 is retracted as the rounds are fed into the magazine and after insertion of the first one or two balls, projection 85 again clears the lever 90, being forced rearwardly in the tube 77. When the magazine is filled, finger piece 80—81 is released, the magazine feeds the first round, and thereafter in order the succeeding rounds, each into position in the firing chamber between pin 67 and shot stop 64. As each succeeding shot is fired by admission of the air charge in a manner to be described, the pressure of springs 84 and 86 continues the feeding of the shot, one at a time, into firing position.

Turning now to the control of admission of the primary air charge, and of the utilization of air pressure for controlling the time of opening of valve 53 and further in effecting the recycling or cocking action through piston 30, it will be assumed for illustration that there is a relatively constant, predetermined air pressure in the chamber of receiver 43. This pressure may be automatically maintained in the compressor tank (not shown) by well known pressure switches, or other means. According to desired rapidity of firing, size of shot, and desired shooting conditions, the air pressure is desirably maintained say within the range of 40–175 p. s. i., but such range is not to be taken as critical.

Assuming now that the bolt is in cocked position as shown, there will exist in the receiver 43, in passage or passages 50, and in the cylinder 47, air under substantially the pressure of that in the receiver. Upon rearward actuation or pull of trigger 14, the bolt 30 will be released and sharply propelled forwardly by the spring 31.

The firing pin or impact element 73 may assume a position either in, or between either of the extremes of its possible movement. It will now be obvious that, irrespective of its axial position, the pin 73 will be sharply struck by the end face of bolt 30, and will in turn make impacting contact with the valve 53, whereupon the pis-

ton valve will be driven sharply forwardly (in the direction shown) over all or part of the internal length of cylinder 47. Because of the impact energy received by and imparted to the valve, a first result will be a partial or nearly total displacement of air from the cylinder 47 outwardly through the throttling opening 55. Valve 53 now being open, air will be delivered rapidly from the receiver port 51 through the annular passage spaces 50, thence through ports 57, thence through seat 52, and passageway 60—61 into the firing chamber and will rapidly impel the round B out of the bore. In moving forwardly of the firing chamber into the bore of the barrel, the shot will obviously displace (slightly upwardly in the direction shown by the drawing), the yieldable shot stop 64. Immediately this is done, the magazine structure, by reason of the bias of springs 84 and 86, will deliver the succeeding round to the firing chamber.

Shortly following the first rush of propulsion air through the major air passage or channel as described, two events ensue: One of these consists in the relatively rapid, although somewhat delayed restoration of full receiver pressure in, with consequent complete filling of cylinder 47. Immediately following the expulsion of at least some of the air from this cylinder upon unseating of valve 53, the throttling passage 55 will again admit air to the cylinder, although not nearly at as high a rate as that supplied through the main air channel to the firing chamber. This is possible since of course the effective instant pressure head in passages 60—61 is now considerably reduced due to the partial conversion of head to velocity, in this region. Accordingly after a very short time, cylinder 47 becomes refilled, although with some delay, and valve 53 is again seated. The selection of area of a trickle passage or bleeder port 55 will thus be of effect in determining the time during which valve 53 remains open for admission of the firing charge of air. It is accordingly possible, by selection of different head discs 54, with different sizes or numbers of openings, to adapt the gun to the air supply pressure desired to be maintained and secondly, assuming a given or fixed air pressure and a bolt spring 31 of given loading characteristics, control of firing rate of the gun may be effected within reasonable limits by the selective insertion of differently apertured discs 54. It will now have appeared that the passage 55 constitutes, functionally, a branch of the main passage directed to the firing chamber.

At about the time of admission of the firing air charge via valve 53, it will have been noted that a portion of the air transmitted by the principal air passages aforesaid, will be diverted through a second branch passage or plurality thereof, as indicated at 71. Thus, practically at the time of or almost immediately following the admission of the firing charge to the chamber 62, the air finding its way through the throttling passages 71, will replenish the supply of air in cylinder space 42. This air, acting against piston 39, will again compress spring 31, and, under normal conditions, will recycle the gun mechanism in restoring the bolt-piston to cocked position. If it be desired to "machine gun" the arm, this may be done, among other ways, by blocking off or restricting some of the passages 71 so that the supply of air, or the effective air pressure in cylinder space 42, is inadequate fully to cock the piston. Under these conditions, although not intended as normal operation in a gun of this type, it is quite possible to maintain continuous firing throughout the magazine supply by maintaining pressure on trigger 14.

It may be noted that upon firing the gun as by the described release of bolt and piston member 39, the charge of air in cylinder 42 ahead of the piston face is not normally wasted, in fact adds materially to the quick delivery of the air charge into the firing chamber. It will be seen that this air charge must be expelled ahead of the rapidly moving piston, and is accordingly expelled through passage 61 along with the onrushing front of the air proceeding through passage 60. It is believed quite possible that there thus exists a very brief period in which actual pressure within passages 60—61 and firing chamber 62, actually considerably exceeds the gauge pressure of the receiver 43.

It will have been noted that in the structure described, there has been attained an exceedingly simple mechanical firing mechanism consisting only of trigger 14, lever 20, sear 22, and the piston bolt. These parts are rugged, easily and simply machined, and require little service attention. It will further have appeared that the entire pneumatic assembly is extremely compact, may be formed practically entirely of standard stock in the nature of tube, rod and plate stock. It will further have been noted that the entire pneumatic assembly is free of springs, with minor exceptions, and in positions where spring fatigue is not an important consideration. The presently described arrangement of main and branch air passages, and the cylinder valve assembly, conduces to an accurate and dependable control of valve opening, hence of firing conditions, all in keeping with the several objects hereinabove noted, and others implied from the description and function of parts.

Although the invention has been described by making particularized reference to a single selected embodiment, the detail of description is to be understood solely in an instructive, rather than in any limiting sense, numerous changes being possible both in the parts and in their arrangement, without departing from the spirit and scope of the claims hereunto appended.

I claim as my invention:

1. In a pneumatic gun, an air receiver, a barrel having a firing chamber, a cylinder mounted adjacent said barrel and provided with a bore therethrough having an intake from said receiver and a discharge into said firing chamber, a valve seat in said bore intermediate said openings, a valve movable in said bore and cooperable with said seat to control flow of air between said openings, a trigger-releasable movable piston in said bore and normally spaced from said valve, a pin in said bore and engageable by said piston to unseat said valve to permit air to flow from said receiver into said firing chamber, air-flow throttling means in said bore intermediate said air-receiver and valve seat and between said discharge opening and piston and proportioned so that the greatest proportion of the air flowing from said air receiver flows into said firing chamber.

2. In a pneumatic gun, a breech structure provided with a pair of vertically superimposed parallel bores, a barrel extended into said upper bore and provided with a firing chamber, said lower bore including an elongated air receiver, a major passageway rearwardly of said receiver, a hollow valve cylinder in the forward end of said passageway rearwardly of said receiver, longi-

tudinal air passages extending rearwardly along said cylinder and communicating at their forward end with said receiver, transverse air passages leading from the rear of said longitudinal passages into said cylinder, a head at the forward end of said cylinder and provided with a throttling passageway therethrough leading from said receiver into the interior of said cylinder, a valve seat at the rear end of said cylinder adjacent said transverse air passages, a piston valve movable in said major passageway to engage said seat to seal off air flow inwardly from said transverse passages, hollow means forming a lateral extension from said major passageway and opening into said firing chamber for propulsion of a round in the latter, an elongate impact pin longitudinally movable in said major passageway to engage and unseat said valve, a guide in said lowermost bore to slidably receive said pin and having a restricted air duct therethrough extending rearwardly of said valve seat, gun mechanism including a trigger, a pivoted sear, a pivoted lever connected between trigger and sear, and a bolt slidable in said lowermost bore and formed to constitute an air piston, said bolt held retracted rearwardly of said pin by said sear, a bolt spring in said bolt, and a spring guiding and supporting means supported externally of said bolt and projecting longitudinally into the latter, said impact pin being shorter than the distance between said valve seat and the adjacent forward end of said retracted combined bolt and piston.

ARCHIE A. JOHNSON.

REFERENCES CITED

The following references are of record in the file of this patent:

UNITED STATES PATENTS

Number	Name	Date
452,882	Giffard	May 26, 1891
645,932	Beck et al.	Mar. 27, 1900
1,854,605	Tratsch	Apr. 19, 1932
1,886,704	Loomis	Nov. 8, 1932
2,006,030	Price	June 25, 1935
2,101,198	Robinson	Dec. 7, 1937
2,123,324	Webby	July 12, 1938
2,238,384	Feltman	Apr. 15, 1941
2,251,836	Schmidt	Aug. 5, 1941
2,304,320	Tratsch	Dec. 8, 1942

FOREIGN PATENTS

Number	Country	Date
360,259	France	Feb. 17, 1906
444,508	France	Oct. 19, 1912