(19) Europäisches Patentamt
European Patent Office
Office européen des brevets

(11) EP 1 074 319 B1

(12) **EUROPEAN PATENT SPECIFICATION**

(45) Date of publication and mention of the grant of the patent:
04.05.2005 Bulletin 2005/18

(51) Int Cl.[7]: **B21D 22/02**, B21D 5/04

(21) Application number: **00116173.6**

(22) Date of filing: **01.08.2000**

(54) **Apparatus for pressing a metal plate into a desired shape**

Vorrichtung zum Pressen eines Blechs in eine bevorzugte Form

Dispositif pour le pressage d'une plaque dans une forme désiré

(84) Designated Contracting States:
AT BE CH CY DE DK ES FI FR GB GR IE IT LI LU MC NL PT SE

(30) Priority: **04.08.1999 JP 22097599**

(43) Date of publication of application:
07.02.2001 Bulletin 2001/06

(73) Proprietor: **Yourbusiness Co., Ltd.**
Kokubunji-shi, Tokyo, 185-0024 (JP)

(72) Inventor: **Kinoshita, Tadatoshi**
Kokubunji-shi, Tokyo 185-0024 (JP)

(74) Representative: **VOSSIUS & PARTNER**
Siebertstrasse 4
81675 München (DE)

(56) References cited:
EP-A- 0 427 886 **EP-A- 0 699 489**

- **PATENT ABSTRACTS OF JAPAN vol. 1997, no. 04, 30 April 1997 (1997-04-30) -& JP 08 332523 A (TOYOTA MOTOR CORP), 17 December 1996 (1996-12-17)**
- **PATENT ABSTRACTS OF JAPAN vol. 1997, no. 02, 28 February 1997 (1997-02-28) -& JP 08 276218 A (MAZDA MOTOR CORP), 22 October 1996 (1996-10-22)**

Note: Within nine months from the publication of the mention of the grant of the European patent, any person may give notice to the European Patent Office of opposition to the European patent granted. Notice of opposition shall be filed in a written reasoned statement. It shall not be deemed to have been filed until the opposition fee has been paid. (Art. 99(1) European Patent Convention).

EP 1 074 319 B1

Printed by Jouve, 75001 PARIS (FR)

Description

[0001] The present invention relates to an apparatus for pressing a metal plate into a desired shape according to the preamble of claim 1, particularly a curved shape, such as fenders or pillars for cars.

[0002] Referring to Fig.11, a conventional apparatus for pressing and shaping a metal plate comprises a lower die "a" and an upper die **"f"**. The lower die **"a"** has a cavity **"b"** in which a rotary die **"c"** is rotatably supported, and the rotary die has a press-shaping section **"d"** formed thereon. The upper die **"f"** has a counter press-shaping blade **"e"** formed to engage with the press-shaping section **"d"** with the metal plate sandwiched therebetween when the metal plate is pressed and shaped. The cavity **"b"** of the lower die **"a"** has receiving surfaces **"g"** formed thereon while the rotary die "c" has abutment surfaces "h" formed thereon to abut on the receiving surfaces **"g"**. When the metal plate is pressed and shaped, the upper and lower dies **"f"** and **"a"** abut on each other with the abutment surfaces **"h"** of the rotary die **"c"** abutting on the receiving surfaces **"g"** of the lower die **"a"** (see Japanese Patent 8-276218A).

[0003] After pressing and shaping the metal plate, the rotary die **"c"** is rotated to retract from the pressed-and-shaped metal plate so as to facilitate release and removal of the pressed-and-shaped plate from the mold assembly. Usually the rotary die **"c"** is of a cylindrical or round rod shape whereas the cavity **"b"** is a round hole.

[0004] New pressing-and-shaping apparatus must be designed and made every time cars are redesigned. To meet a strong desire for providing such new pressing-and-shaping apparatuses in possible minimum time, and at the same time to satisfy a requirement for reducing the pressing-and-shaping cost to possible minimum, there has been an ever increasing demand for providing a general-purpose, pressing-and-shaping apparatus which is capable of shaping metal plates easily, smoothly and at a reduced cost, requiring a minimum maintenance fee.

[0005] In making such a conventional pressing-and-shaping apparatus, the circular-concave die and the circular rotary die require time- and labor-consuming work in machining, and accordingly these parts cost much.

[0006] The lower die of the conventional pressing-and-shaping apparatus uses a round rotary die fitting in its round-concave die the lower die has the round cavity and the rotary die is rotated in the round cavity, and such lower die requires inevitably extra dead spaces around the cavity, thus making it difficult to reduce the size of the pressing-and-shaping apparatus.

[0007] As seen from Fig.11, the tangential lines E extending from the surfaces at which the lower die **"a"** and the rotary die **"c"** are put in contact cross each other. The so defined receiving and abutment surfaces require the machining precise enough to provide almost perfect flatness on their abutting surfaces because otherwise, the lower die **"a"** would be rubbed with the rotary die **"c"** badly to cause a significant deformation on either side. To be guaranteed free of such a significant deformation it is necessary to machine the cavity **"b"** of the lower die **"a"** and the rotary die **"c"** with high precision, and such precision machining requires labor and cost consuming work.

[0008] In view of the above, one object of the present invention is to provide a pressing-and-shaping apparatus which is small in size, still being capable of shaping metal plates easily, smoothly and at reduced cost, requiring an easy maintenance with a minimum fee.

[0009] To attain this object, an apparatus for pressing a metal plate into a desired shape comprising: a lower die having a cavity in which a rotary die is rotatable on an axis thereof; the rotary die having the rotational or pivotal axis extending in a longitudinal direction of the mold piece and having a press-shaping section formed to extend in the longitudinal direction; and an upper die having a counter press-shaping section formed to engage with the press-shaping section of the rotary die with the metal plate sandwiched therebetween at a time of pressing and shaping the metal plate, the cavity of the lower die having receiving sections for supporting the rotary die at the time of pressing and shaping the metal plate, each receiving section having flat receiving surface whereas the rotary die having abutment surfaces formed on its bottom to abut on the flat receiving surfaces, the rotary die being adapted to be set in a predetermined angular position at the time of pressing and shaping the metal plate and to rotate and return to a rest position after finishing the pressing and shaping of the metal plate, is characterized according to the present invention in that:

both of the cavity of the lower die and the rotary die have an L-shaped cross section in the plane crossing at right angles to the longitudinal direction;
the receiving sections include first receiving sections having flat receiving surfaces extending along a lateral moving direction of the counter press-shaping section, and second receiving sections having flat receiving surfaces extending perpendicular to the lateral moving direction;
the abutment surfaces include first abutment surfaces to confront the first receiving surfaces and extending along the lateral moving direction of the counter press-shaping section, and second abutment surfaces to confront the second receiving surfaces and extending perpendicular to the lateral moving direction.

[0010] The receiving sections and the abutment surfaces can desirably be determined in number, size and positions in consideration of the weight and size of the rotary die.

[0011] The receiving section may be formed by carving the lower die at the time of forming the cavity in the lower die. However, it is preferable to form the receiving

section with flat plate, since use of the flat plate facilitates forming of the receiving section. This can be achieved by only bolting the flat plates to the lower die at desired positions in the cavity. The flat plates can be used as either or both of the first and second receiving sections. Furthermore, it is advantageous that worn plates can be changed readily for new flat plates.

[0012] The abutment surfaces may be formed with flat plates bolted to an outer side of the rotary die. Use of the flat plates as abutment surfaces facilitates forming of the abutment surface, since it can be achieved by only bolting the flat plates to the rotary die at desired positions an outer surfaces. Furthermore, it is advantageous that worn plates can be changed readily for new flat plates. The flat plates can be used as either or both of the first and second abutment surface of the rotary die.

[0013] The rotary die may include a circular arc surface formed on the central bottom, the circular arc being a part of the circle drawn about the pivot the rotary die turns, and the lower die may have a bearing mechanism for bearing the circular arc surface of the rotary die. This arrangement assures that the rotary die turns smoothly even if formed so long, still preventing the undesired sinking of the heavy rotary die.

[0014] The bearing mechanism may include a pair of parallel rolls laterally arranged, on which the circular arc surface of the rotary die is rotatably supported. This provides a simple bearing structure, which is able to effectively prevent the undesired sinking of the heavy rotary die.

[0015] Other objects and advantages of the present invention will be understood from the following descriptions of some preferred embodiments of the present invention, which are shown in accompanying drawings.

Fig.1 is a cross sectional view showing the main parts of a pressing-and-shaping apparatus according to a first embodiment of the present invention;
Fig.2 is a similar view of the pressing-and-shaping apparatus showing the movement;
Fig.3 is a plane view of the rotary die, partly omitted;
Fig.4 is a plane view of the main parts of the bearing mechanism;
Fig.5 is a sectional view of the receiving mechanism taken along the line 5-5 in Fig.4;
Fig.6 is a side view of the bearing mechanism as seen in the direction indicated by the line and arrows 6-6 in Fig.4;
Fig.7 is a sectional view of the receiving mechanism showing how to work;
Fig.8 illustrates, in section, the main parts of a pressing-and-shaping apparatus according to a second embodiment of the present invention;
Fig.9 illustrates, in section, the main parts of a pressing-and-shaping apparatus according to a third embodiment of the present invention;
Fig.10 illustrates, in section, the main parts of a pressing-and-shaping apparatus according to a fourth embodiment of the present invention; and
Fig.11 illustrates, in section, the main parts of a conventional pressing-and-shaping apparatus.

[0016] Referring to Figs.1 and 2, an apparatus for pressing a metal plate into a desired shape according to a first embodiment of the present invention includes a lower die 1 having a cavity 2 in which a rotary die 4 is rotatably supported. The lower die 1 comprises a concave body 1a and a forming piece 1b integrally connected to the top of the concave body 1a. A metal plate 3 to be pressed and shaped is put on the forming piece 1b. A cavity 2 of the concave body 1a takes an L-shape in cross section as seen in Figs. 1 and 2. The rotary die 4 is rotatable about its lateral axis P, and can be driven to a predetermined angular pressing and shaping position, and can be rotated and withdrawn to the rest position after finishing the pressing and shaping of the metal plate 3.

[0017] The rotary die 4 takes an L-shape in cross section, and has a press-shaping section 4a formed on its upper, inner end for pressing and shaping a selected part of the metal plate 3. As shown in Fig.3, the L-shaped rotary die 4 extends in the longitudinal direction and has opposite ends supported by bearings 5.

[0018] An upper die 7 includes a slide cam 7a capable of sliding laterally, and the slide cam 7a has a counter press-shaping section 6 formed thereon. The counter press-shaping section 6 is adapted to abut on the press-shaping section 4a of the rotary die 4 with the metal plate 3 sandwiched therebetween when the metal plate 3 is pressed and shaped. In addition to the slide cam 7a, the upper die 7 includes a pressing piece 7b and a flange shaping piece 7c, which can be moved back and forth relative to each other with associated cam means.

[0019] A plurality of first and second receiving sections 8a and 8b are provided in the cavity 2 for supporting the rotary die 4 at the time of pressing and shaping the metal plate 3, which are arranged laterally on a predetermined position in the longitudinal direction. Each of the first receiving sections 8a includes a flat receiving surface to confront extending horizontally, i.e. im the direction in which the counter press-shaping section 6 moves (indicated by an arrow in Fig.1). Each of the second receiving sections 8b has a flat receiving surface extending vertically, i.e. in the direction perpendicular to the moving direction of the counter press-shaping section 6.

[0020] In the first embodiment, the first receiving sections 8a are provided by fixing flat plates 9 to the lower die 1 at the horizontal concave surface with bolts 10 whereas the second receiving sections 8b are provided by machining the L-shaped lower die 1 at the vertical concave side to form plateau-like projections.

[0021] The L-shaped rotary die 4 has a plurality of first abutment surfaces 11a and second abutment surfaces 11b arranged on horizontal and vertical sides thereof to abut on the first and second receiving sections 8a and

8b, respectively, upon pressing and shaping the metal plate 3. Each of the first abutment surfaces 11a is formed extending horizontally, i.e. in the moving direction of the counter press-shaping section 6. Each of the second abutment surfaces 11b is formed extending vertically, i.e. in the direction perpendicular to the moving direction.

[0022] In the first embodiment as shown in Figs.1 and 2, the first abutment surfaces 11a are formed by machining the L-shaped rotary die 4 at a horizontal outer side thereof to form plateau-like projections arranged in the longitudinal direction whereas the second abutment surfaces 11b are formed by fixing flat plates 9 to the rotary die 4 at the vertical outer side thereof with bolts 10.

[0023] Also, as shown in Fig.1, the first abutment surface 11a is arranged so that the front side 12 is positioned behind a vertical line **L** passing through the pivotal axis **P** of the rotary die 4. On the other hand, the second abutment surface 11b is arranged so that the upper side 13 thereof is positioned below a horizontal line **H** passing through the axis **P.**

[0024] Referring to Figs.3 to 7, the L-shaped lower die 1 has a bearing mechanism 14 for supporting or receiving the rotary die 4 at the central bottom portion 4b thereof. As seen from Fig.7, the intermediate bearing section 4b of the bottom of the rotary die 4 includes a circular arc surface formed on the bottom of the L-shaped rotary die. The circular arc is a part of the circle drawn about the pivot **P** about which the rotary die 4 turns, and the bearing mechanism bears the circular arc surface of the rotary die 4 . As seen from Fig.7, the intermediate bearing section 4b of the bottom of the rotary die 4 is provided by fixing a circular arc plate 15 to the rotary die 4 with headed bolts 16, each having a hexagonal hole made in its head. The circular arc plate 15 is high-frequency hardened.

[0025] The bearing mechanism 14 includes a pair of parallel rolls 14a laterally arranged, on which the circular arc surface 4b of the rotary die **4** is rotatably supported. Each roll 14a rotates about its lateral axis $14a_1$, and a holder 14b holds these lateral axes rotatably. The holder 14b is fixed to the lower die 1 with headed bolts 14d, each having a hexagonal hole made in its head, as seen from Fig. 7. Each lateral axis $14a_1$ is fixed in position with an associated pin 14e.

[0026] Now, the manner in which the pressing-and-shaping apparatus works is described below.

[0027] A sheet of metal 3 to be pressed and shaped into a desired shape is put on the forming piece 1b of the lower die 1. Then, the upper die 7 descends so that the slide cam 7a allows the rotary die 4 to pivot clockwise on the axis **P** so as to set the rotary die 4 at a predetermined working position, as shown in Fig. 1. At the same time, the pressing piece 7b moves down to fix the metal plate 3 onto the forming piece 1b of the lower die 1, while the flange shaping piece 7c moves down in pressing position, whereby determined portions of the metal plate 3 is shaped with the shaping pieces 7b and 7c.

[0028] Subsequently, the slide cam 7a is moved along with the counter press-shaping section 6 in the direction as indicated by the arrow in Fig.1 to the metal plate 3 against the press-shaping section 4a of the rotary die 4, thereby shaping the pushed portion of the metal plate 3. While the metal plate 3 is pressed to be shaped, the flat abutment surfaces 11a and 11b of the rotary die 4 are in contact with the flat receiving surfaces of the receiving sections 8a and 8b of the lower die 1, so that the die 1 bears the load of pressure which is applied to the rotary die 4.

[0029] When the pressing-and-shaping work has been finished, the upper die 7 returns to its rest position, thus allowing the counter press-shaping section 6 of the slide cam 7a, the pressing piece 7b and the flange shaping piece 7c to leave the lower die 1. The returning of the upper die 7 to its rest position is detected by means of an associated sensor which generates a signal of returning. Piston-and-cylinder drive means responds to the signal from the sensor in order to rotate and move the rotary die 4 backward, as shown in Fig.2. Thus, the rotary die 4 is inclined so that the abutment surfaces 11a and 11b of the rotary die 4 may leave the receiving sections 8a and 8b of the lower die 1, and so that the press-shaping section 4a of the rotary die 4 may leave the pressed-and-shaped metal plate 3, whereby the finished metal plate 3 can readily be removed from the mold assembly.

[0030] As described above, the lower die and the rotary die are so shaped that their cross sections may take an L-shape, and the horizontal and vertical extensions of the lower die have receiving surfaces provided thereon to confront the counter abutment surfaces of the rotary die.

[0031] Thanks to the so defined shapes of the lower die and rotary die, these parts can be easily manufactured simply by machining square metal blocks or rods orthogonally. This permits substantial reduction of manufacturing steps, and hence of manufacturing cost and time involved for making a pressing-and-shaping apparatus, compared with the conventional one.

[0032] Also, the L-shaped cross-sections of the rotary die and the lower die permit the rectilinear definition with the lower die around its cavity, thus reducing the dead space around the cavity to minimum, and accordingly reducing the size of the pressing-and-shaping apparatus.

[0033] Further, the orthogonal arrangement of the receiving and abutment surfaces of the lower die and the rotary die assures that the pressing force be applied to these parts in a stable way, and such orthogonal arrangement facilitates smooth and precise positioning or machining of the flat surfaces of these receiving and abutment surfaces, as well as the maintenance of the pressing-and-shaping apparatus.

Claims

1. An apparatus for pressing a metal plate into a desired shape comprising a lower die (1) having a cavity (2) formed on its upper surface; a rotary die (4) supported in the cavity rotatably around a rotational axis extending in a longitudinal direction of the rotary die, the rotary die (4) having a press-shaping section (4a) formed extending in the longitudinal direction; and an upper die (7) having a counter press-shaping section (6) formed to engage with the press-shaping section (4a) of the rotary die with the metal plate sandwiched therebetween at a time of pressing and shaping the metal plate, the cavity (2) of the lower die having a receiving section (8) for supporting the rotary die at the time of pressing and shaping the metal plate, the receiving section (8) having flat receiving surfaces whereas the rotary die having abutment surfaces formed on its bottom to abut on the flat receiving surfaces, the rotary die (4) being adapted to be set in a predetermined angular position at the time of pressing and shaping the metal plate and to rotate and return to a rest position after finishing the pressing and shaping of the metal plate, **characterized in that**:

   both of the cavity (2) of the lower die and the rotary die (4) have an L-shaped cross section in the plane crossing at right angles to the longitudinal direction;
   the receiving sections (8) include first receiving sections (8a) having flat receiving surfaces extending along a lateral moving direction of the counter press-shaping section(6), and second receiving sections (8b) having flat receiving surfaces extending perpendicular to the lateral moving direction;
   the abutment surfaces include first abutment surfaces (11a) extending along the lateral moving direction of the counter press-shaping section to confront the first receiving surface (8a), and a second abutment surface (11b) extending perpendicular to the lateral moving direction to confront the second receiving sections 8(b).

2. An apparatus for pressing a metal plate into a desired shape according to claim 1, wherein the receiving sections (8) are composed of flat plates (9) bolted to the lower die (1).

3. An apparatus for pressing a metal plate into a desired shape according to claim 1 or 2, wherein the abutment surfaces (11a) are composed of flat plates (9) bolted to the rotary die (4).

4. An apparatus for pressing a metal plate into a desired shape according to one of claims 1 to 3, wherein the rotary die (4) includes a circular arc surface (4b) formed on the central bottom, the circular arc being a part of the circle drawn about the pivot the rotary die (4) turns, and the lower die (1) has a bearing mechanism (14) for bearing the circular arc surface of the rotary die.

5. An apparatus for pressing a metal plate into a desired shape according to claim 4, wherein the bearing mechanism (14) includes a pair of parallel rolls (14a,14a) laterally arranged, on which the circular arc surface of the rotary die is rotatably supported.

Patentansprüche

1. Vorrichtung zum Pressen eines Blechs in eine gewünschte Form mit einem Untergesenk (1), das einen auf seiner Oberseite gebildeten Hohlraum (2) hat; einem Drehgesenk (4), das im Hohlraum drehbar um eine Drehachse abgestützt ist, die sich in Längsrichtung des Drehgesenks erstreckt, wobei das Drehgesenk (4) ein Preßformteilstück (4a) hat, das so gebildet ist, daß es sich in Längsrichtung erstreckt; und einem Obergesenk (7) mit einem Gegenpreßformteilstück (6), das so gebildet ist, daß es einen Eingriff mit dem Preßformteilstück (4a) des Drehgesenks mit dem dazwischen eingefügten Blech beim Pressen und Formen des Blechs herstellt, wobei der Hohlraum (2) des Untergesenks ein Aufnahmeteilstück (8) zum Abstützen des Drehgesenks beim Pressen und Formen des Blechs hat, das Aufnahmeteilstück (8) flache Aufnahmeflächen hat, wogegen das Drehgesenk Stoßflächen hat, die an seinem Boden gebildet sind, um an die flachen Aufnahmeflächen anzustoßen, das Drehgesenk (4) geeignet ist, in einer vorbestimmten Winkelposition beim Pressen und Formen des Blechs eingestellt zu werden sowie sich zu drehen und in eine Ruheposition nach Abschluß des Pressens und Formens des Blechs zurückzukehren, **dadurch gekennzeichnet, daß**:

   sowohl der Hohlraum (2) des Untergesenks als auch das Drehgesenk (4) einen L-förmigen Querschnitt in der die Längsrichtung rechtwinklig kreuzenden Ebene haben;
   die Aufnahmeteilstücke (8) erste Aufnahmeteilstücke (8a) mit flachen Aufnahmeflächen, die sich in Querbewegungsrichtung des Gegenpreßformteilstücks (6) erstrecken, und zweite Aufnahmeteilstücke (8b) mit flachen Aufnahmeflächen aufweisen, die sich senkrecht zur Querbewegungsrichtung erstrecken;
   die Stoßflächen erste Stoßflächen (11a), die sich in Querbewegungsrichtung des Gegenpreßformteilstücks erstrecken, um gegenüber der ersten Aufnahmefläche (8a) zu liegen, und eine zweite Stoßfläche (11b) aufweisen, die

sich senkrecht zur Querbewegungsrichtung erstreckt, um gegenüber den zweiten Aufnahmeteilstükken (8b) zu liegen.

2. Vorrichtung zum Pressen eines Blechs in eine gewünschte Form nach Anspruch 1, wobei sich die Aufnahmeteilstücke (8) aus flachen Platten (9) zusammensetzen, die an das Untergesenk (1) geschraubt sind.

3. Vorrichtung zum Pressen eines Blechs in eine gewünschte Form nach Anspruch 1 oder 2, wobei sich die Stoßflächen (11a) aus flachen Platten (9) zusammensetzen, die an das Drehgesenk (4) geschraubt sind.

4. Vorrichtung zum Pressen eines Blechs in eine gewünschte Form nach einem der Ansprüche 1 bis 3, wobei das Drehgesenk (4) eine auf dem mittleren Boden gebildete Kreisbogenfläche (4b) aufweist, wobei der Kreisbogen ein Teil des Kreises ist, der um den Schwenkpunkt gezogen ist, um den das Drehgesenk (4) dreht, und das Untergesenk (1) einen Lagermechanismus (14) zum Lagern der Kreisbogenfläche des Drehgesenks hat.

5. Vorrichtung zum Pressen eines Blechs in eine gewünschte Form nach Anspruch 4, wobei der Lagermechanismus (14) ein Paar quer angeordnete parallele Walzen (14a, 14a) aufweist, auf denen die Kreisbogenfläche des Drehgesenks drehbar abgestützt ist.

Revendications

1. Dispositif pour presser une plaque métallique en une forme souhaitée comprenant une matrice inférieure (1) comportant une cavité (2) formée sur sa surface supérieure ; une matrice rotative (4) supportée dans la cavité de manière à pouvoir tourner autour d'un axe de rotation s'étendant dans une direction longitudinale de la matrice rotative, la matrice rotative (4) comportant une section de mise en forme par pression (4a) formée de manière à s'étendre dans la direction longitudinale ; et une matrice supérieure (7) comportant une section de mise en forme par contre-pression (6) formée de manière à venir en prise avec la section de mise en forme par pression (4a) de la matrice rotative, la plaque métallique étant intercalée entre elles à un instant de pressage et de mise en forme de la plaque métallique, la cavité (2) de la matrice inférieure comportant une section de réception (8) pour supporter la matrice rotative à l'instant de pressage et de mise en forme de la plaque métallique, la section de réception (8) présentant des surfaces de réception plates, tandis que la matrice rotative présente des surfaces de butée formées sur son fond pour venir en butée contre les surfaces de réception plates, la matrice rotative (4) étant adaptée pour être placée dans une position angulaire prédéterminée à l'instant de pressage et de mise en forme de la plaque métallique et pour tourner et retourner à une position de repos à la fin du pressage et de la mise en forme de la plaque métallique, **caractérisé en ce que** :

la cavité (2) de la matrice inférieure et la matrice rotative (4) ont toutes deux une section en L dans le plan coupant à angle droit la direction longitudinale ;
les sections de réception (8) comprennent de premières sections de réception (8a) présentant des surfaces de réception plates s'étendant dans une direction de déplacement latéral de la section de mise en forme par contre-pression (6) et de deuxièmes sections de réception (8b) présentant des surfaces de réception plates s'étendant perpendiculairement à la direction de déplacement latéral ;
les surfaces de butée comprennent de premières surfaces de butée (11a) s'étendant dans la direction de déplacement latéral de la section de mise en forme par contre-pression pour faire face à la première surface de réception (8a) et une deuxième surface de butée (11b) s'étendant perpendiculairement à la direction de déplacement latéral pour faire face à la deuxièmes sections de réception (8b).

2. Dispositif pour presser une plaque métallique en une forme souhaitée selon la revendication 1, dans lequel les sections de réception (8) sont composées de plaques plates (9) boulonnées à la matrice inférieure (1).

3. Dispositif pour presser une plaque métallique en une forme souhaitée selon la revendication 1 ou 2, dans lequel les surfaces de butée (11a) sont composées de plaques plates (9) boulonnées à la matrice rotative (4).

4. Dispositif pour presser une plaque métallique en une forme souhaitée selon l'une des revendications 1 à 3, dans lequel la matrice rotative (4) comprend une surface d'arc circulaire (4b) formée sur la partie de fond centrale, l'arc circulaire faisant partie du cercle décrit autour du point de pivotement de la matrice rotative (4), et la matrice inférieure (1) comporte un mécanisme de support (14) pour supporter la surface d'arc circulaire de la matrice rotative.

5. Dispositif pour presser une plaque métallique en une forme souhaitée selon la revendication 4, dans lequel le mécanisme de support (14) comprend

deux rouleaux parallèles (14a, 14a) agencés latéralement, sur lesquels la surface d'arc circulaire de la matrice rotative est supportée en rotation.

FIG. 1

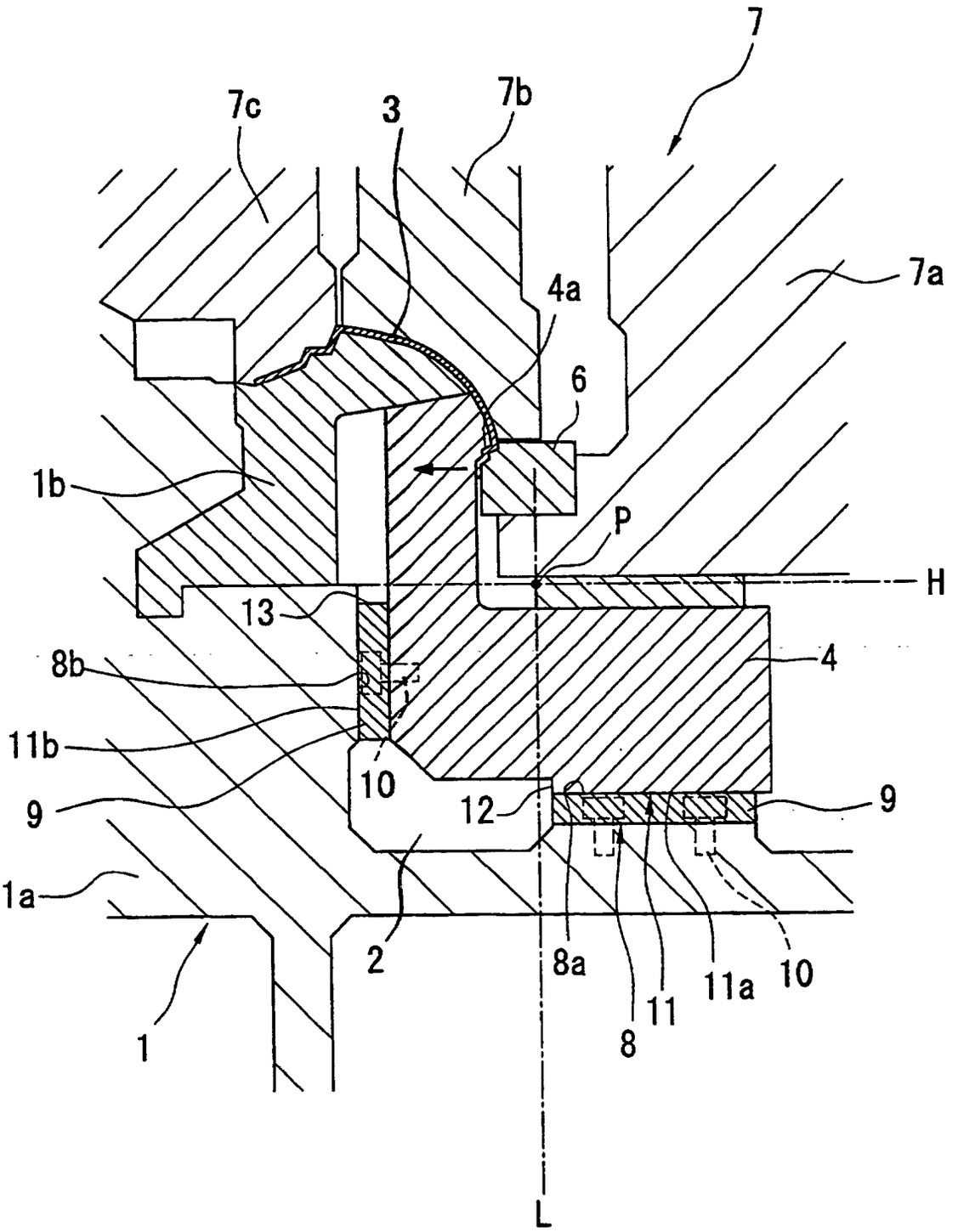

FIG. 2

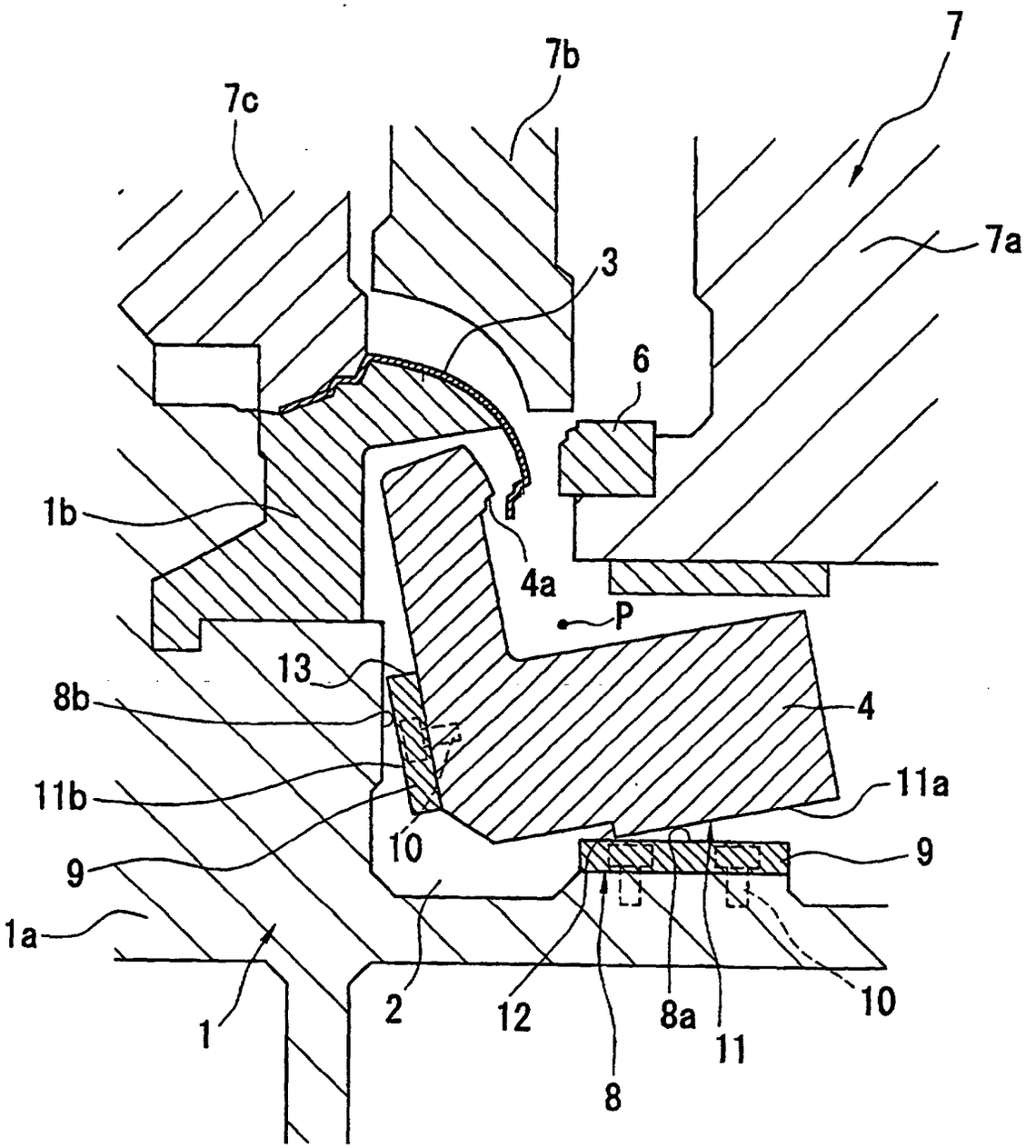

FIG. 3

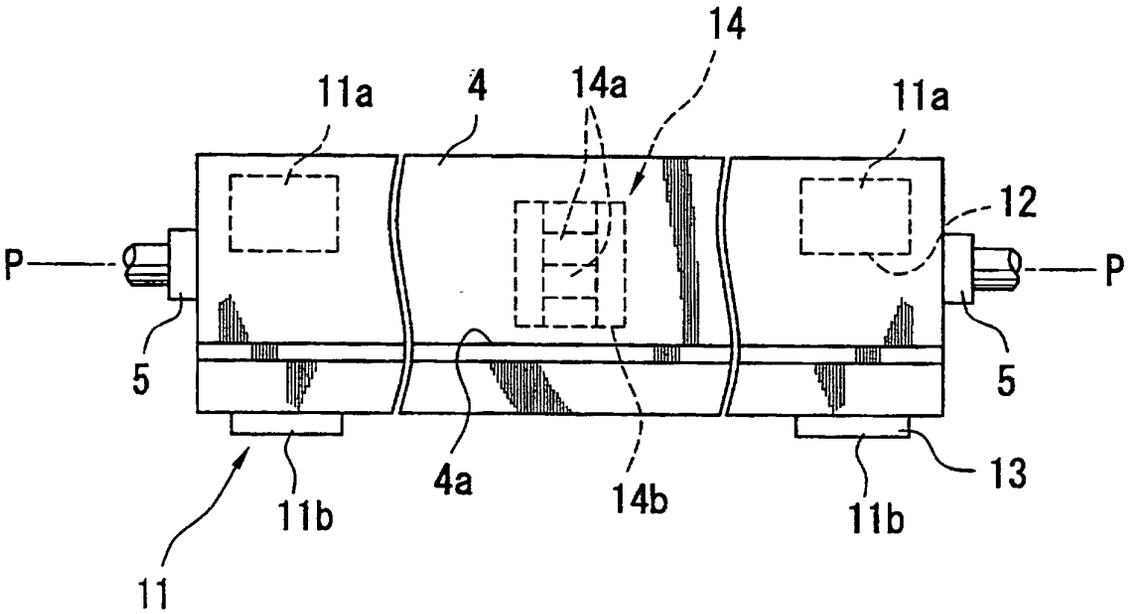
14
11a
4
14a
11a
12
P
P
5
5
4a
14b
13
11b
11b
11

FIG. 4

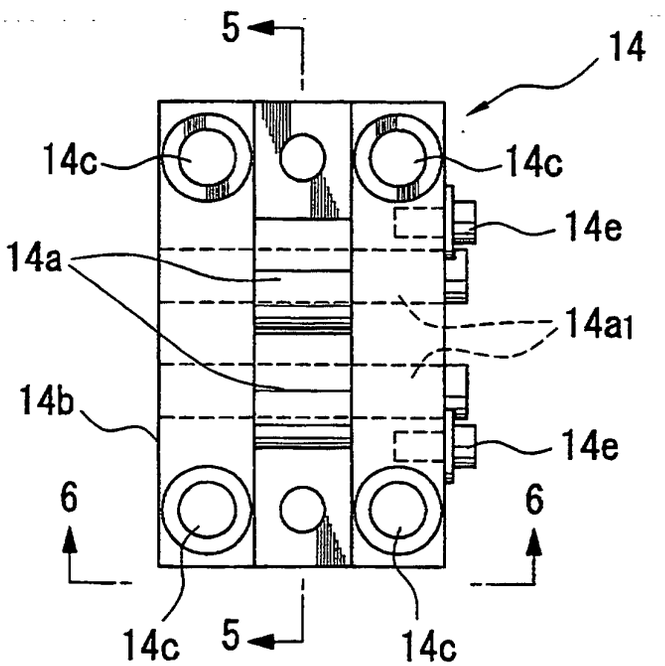
5
14
14c
14c
14e
14a
14a1
14b
14e
6
6
14c
5
14c

FIG. 5

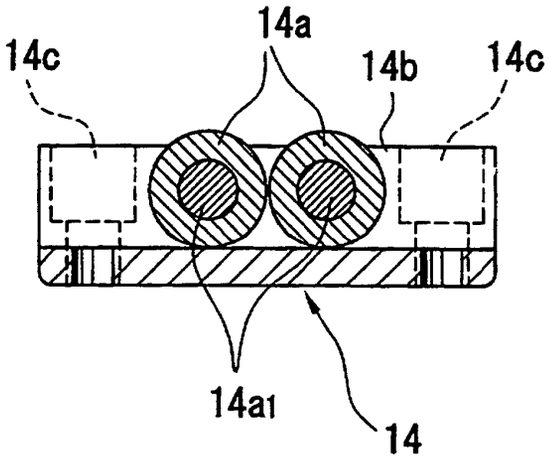

FIG. 6

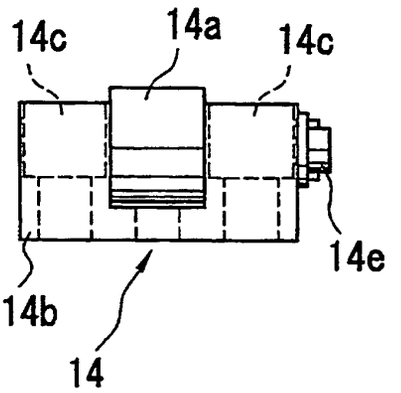

FIG. 7

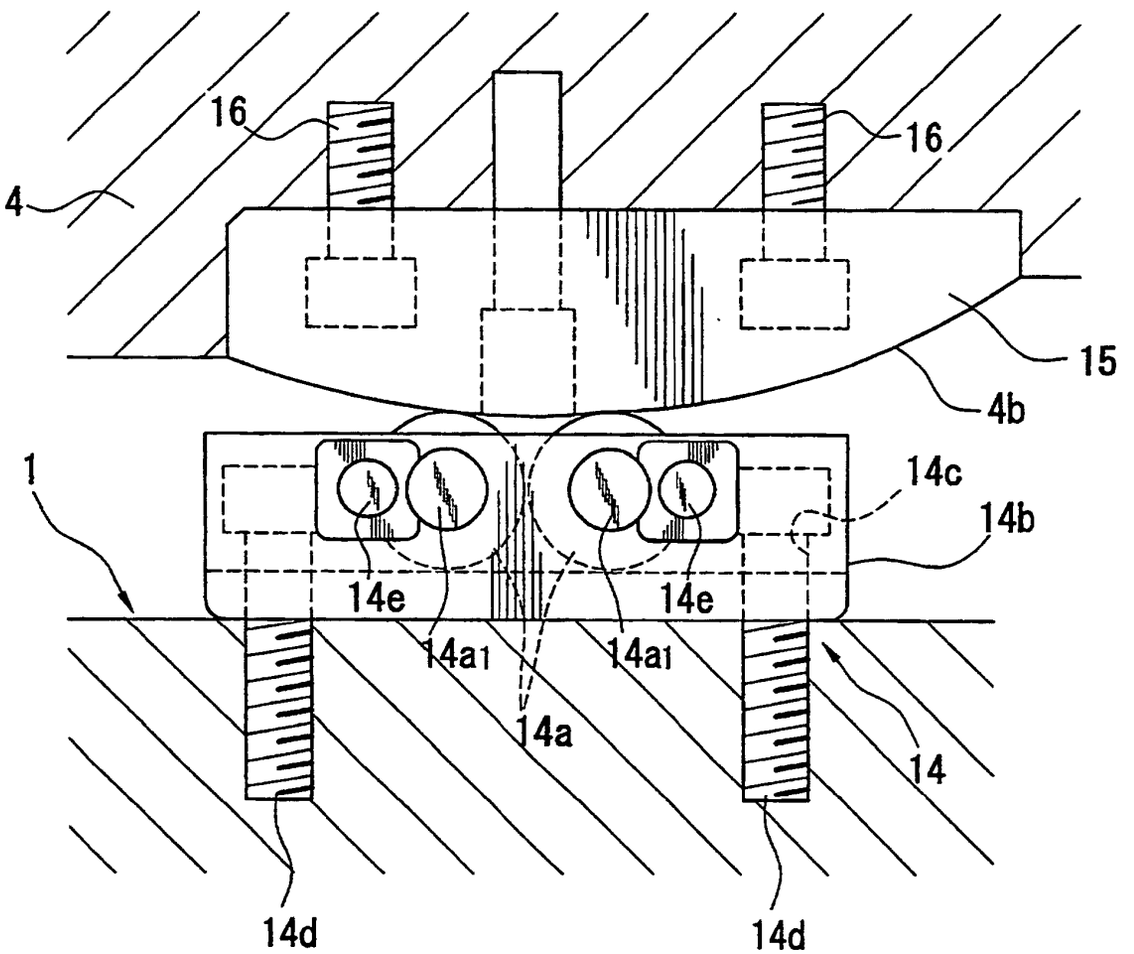

FIG. 8

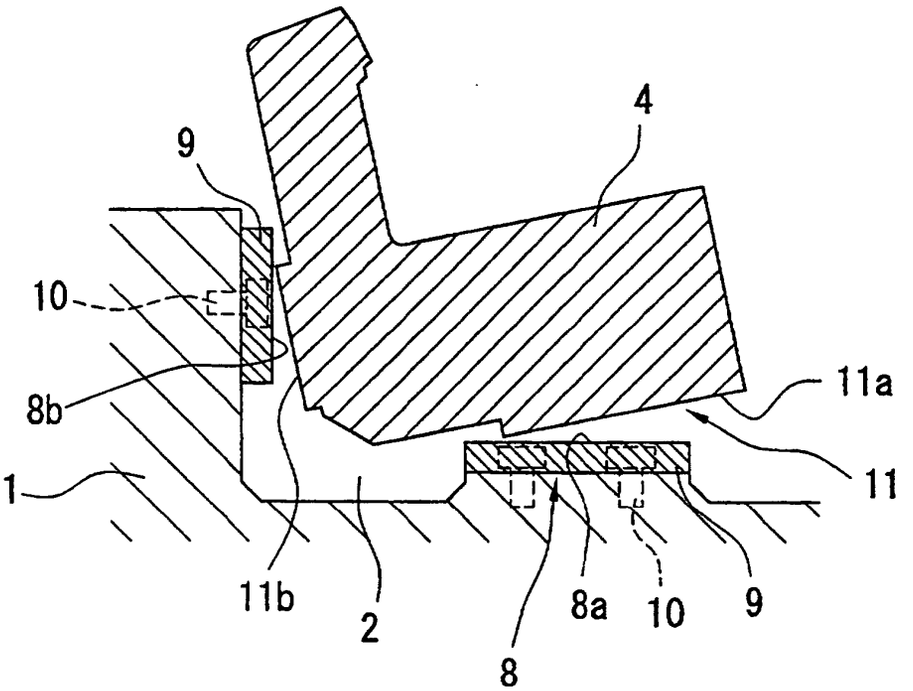

FIG. 9

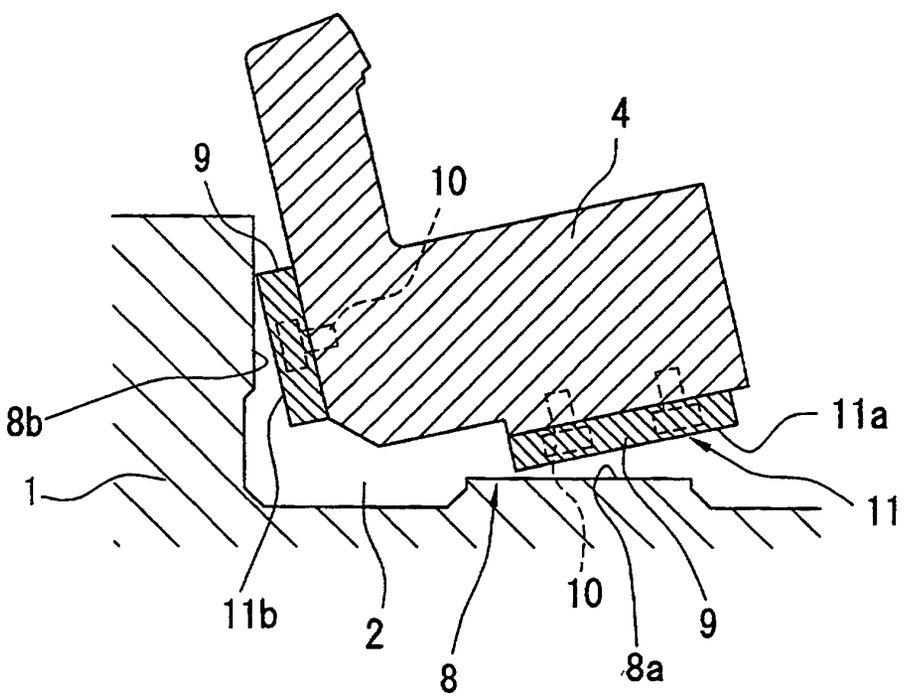

FIG. 10

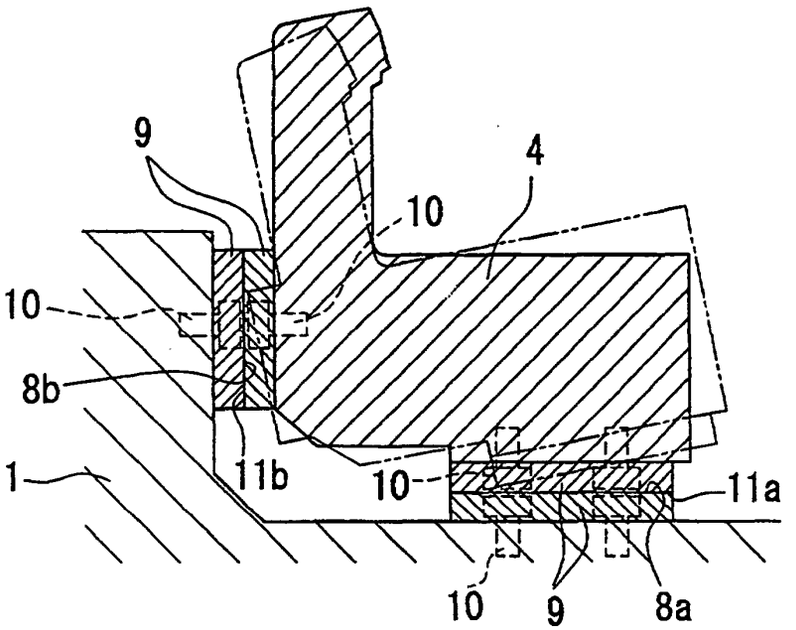

FIG. 11
PRIOR ART

