J. W. DE COU.

REVOLVING TURRET FOR MOTOR CARS.

APPLICATION FILED FEB. 11, 1915.

1,140,364.

Patented May 25, 1915.

2 SHEETS—SHEET 1.

Fig. 1.

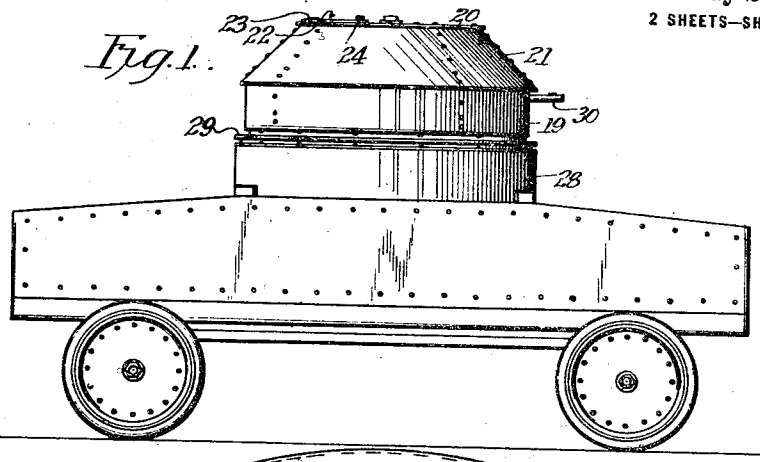

Fig. 2.

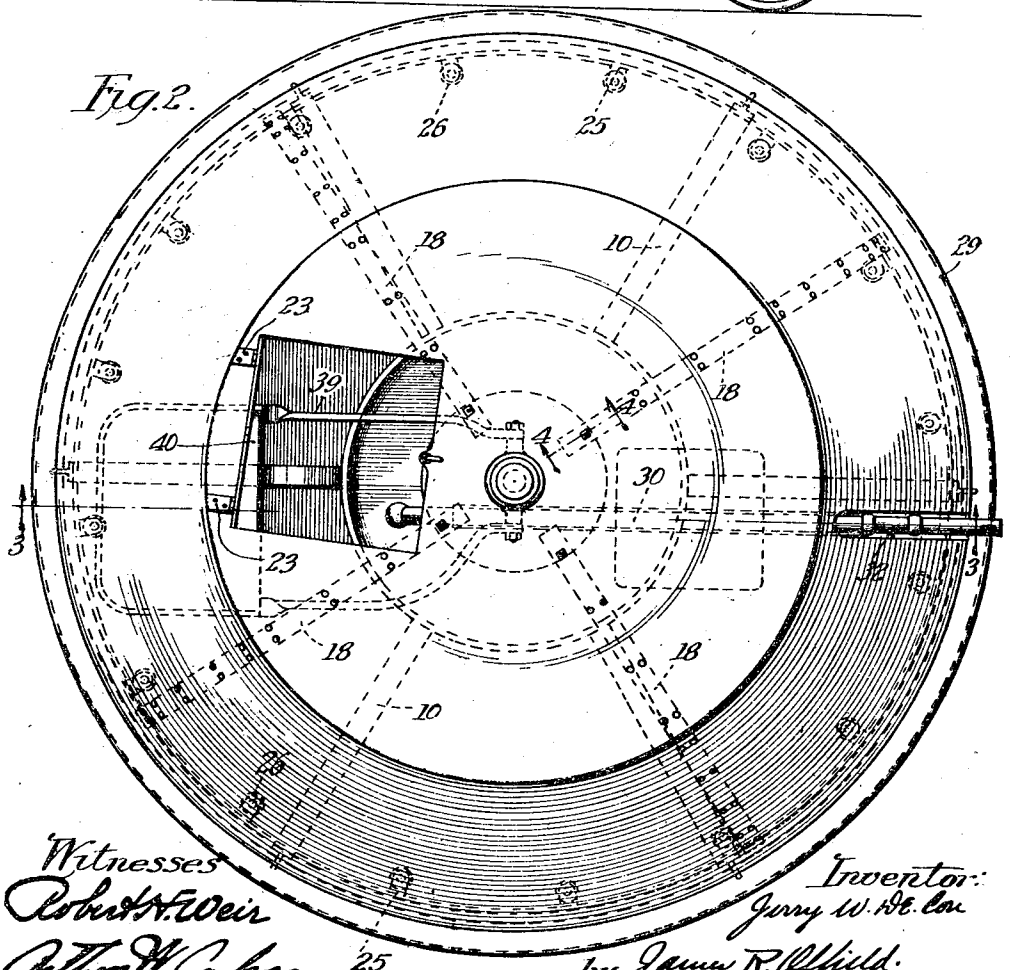

Witnesses
Robert F. Weir
Arthur W. Cabon

Inventor:
Jerry W. De Cou
by James R. Offield
Atty.

J. W. DE COU.

REVOLVING TURRET FOR MOTOR CARS.

APPLICATION FILED FEB. 11, 1915.

1,140,364.

Patented May 25, 1915.

2 SHEETS—SHEET 2.

Fig. 3.

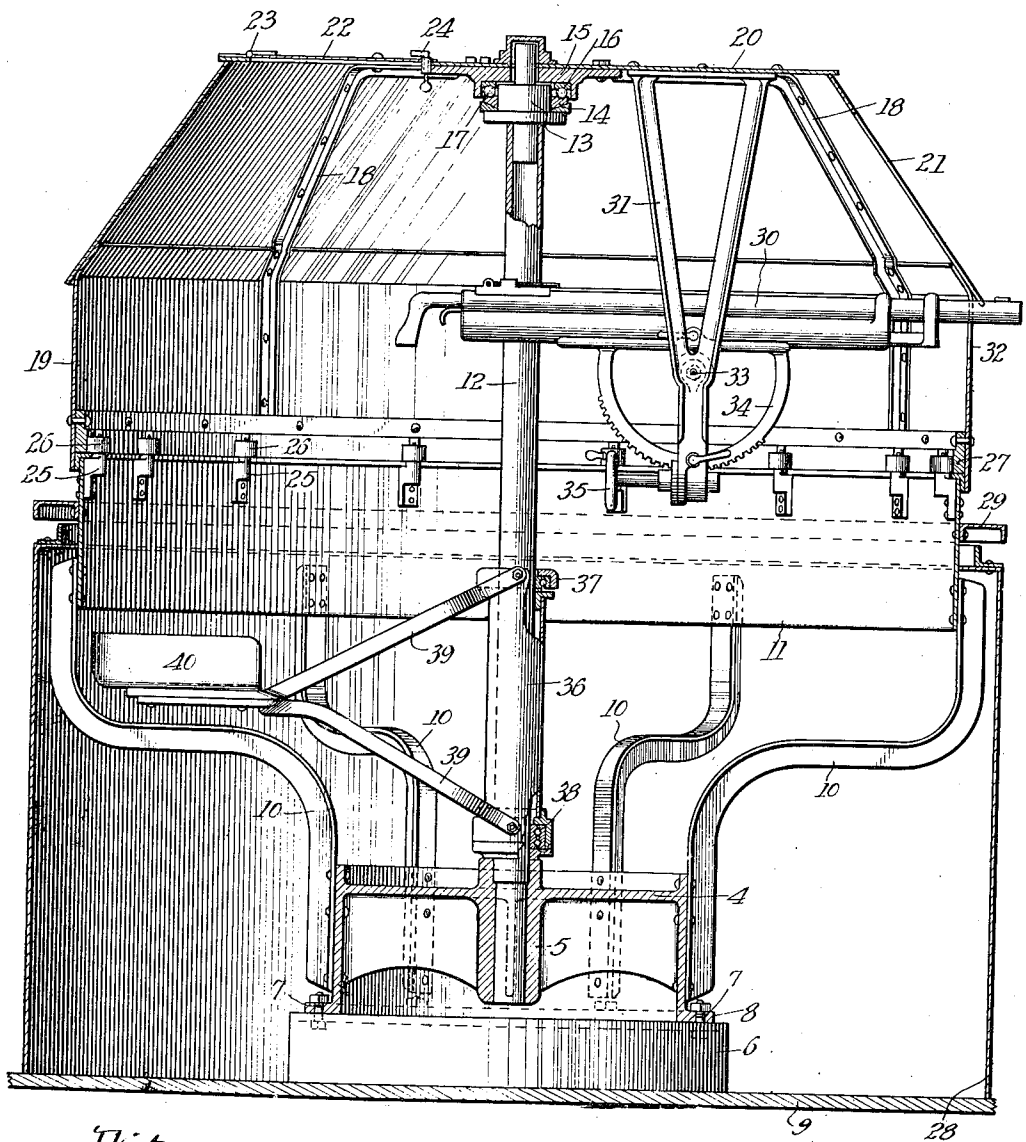

Witnesses.

Robert F. Weir

Arthur H. Carlson

Inventor:

Jerry W. DE Cou

by James R. Offield

Atty.

UNITED STATES PATENT OFFICE.

JERRY W. DE COU, OF KENOSHA, WISCONSIN, ASSIGNOR TO THE THOMAS B. JEFFERY COMPANY, OF KENOSHA, WISCONSIN, A CORPORATION OF WISCONSIN.

REVOLVING TURRET FOR MOTOR-CARS.

1,140,364. Specification of Letters Patent. Patented May 25, 1915.

Application filed February 11, 1915. Serial No. 7,646.

To all whom it may concern:

Be it known that I, JERRY W. DE COU, a citizen of the United States, residing at Kenosha, in the county of Kenosha and State of Wisconsin, have invented certain new and useful Improvements in Revolving Turrets for Motor-Cars, of which the following is a specification.

My invention relates broadly to a revolving turret but more particularly to a turret adapted to be used upon motor cars.

The principal object of my invention is to construct a turret that may be easily rotated upon its axis by the operator and which will not move, to any great extent, under varying road conditions over which the motor vehicle travels.

With those turrets adapted to be mounted upon motor cars and with which I am familiar, the top as well as the lower portion of the turret move together around a common axis and consequently the operator is compelled to rotate a large amount of metal. This great weight causes the turret, when the vehicle is inclined, to rotate in the direction of the applied weight, thus throwing the gun out of aim in case the vehicle lurches after sight has been taken. Furthermore the great weight of the turret causes it to bind upon its bearings when the vehicle is inclined and thus render it inoperative for a quick shift of the gun at a critical moment.

A further object of my invention is to construct a turret whereby the operator may or may not rotate with the turret as the occasion may require and thus the operator is able to hold the turret in a steady position when the vehicle is inclined.

Other advantages of the invention will be more particularly referred to in the specification and the novel details of the invention are shown in the accompanying drawings of which—

Figure 1 is a side elevational view of my improved turret mounted upon a motor vehicle. Fig. 2 is a top view of the turret shown in Fig. 1. Fig. 3 is a vertical sectional view of Fig. 2.

Referring now more particularly to the drawings, the base casting 4 is provided with a central bearing block 5 and the casting rests upon a base block 6 and is secured thereto by means of the bolts 7 which pass through suitable apertures in the flange 8.

The block 6 rests upon the floor 9 or any other suitable support attached to the vehicle frame. Secured to the base casting 4 are a plurality of supporting arms 10 which extend upwardly and to the upper ends of which a circular plate 11 is attached. A post or vertical axle 12 has its lower end extending into the bearing block 5 on the casting 4, maintaining the post in a vertical position and mounted upon the post at its upper end is a bearing block 13 having a race surface 14 thereon, and the head plate 15 is provided with a race surface 16.

Interposed between the race surfaces 14 and 16 are the ball bearings 17. The head plate 15 has a plurality of braces 18 secured to it which extend downwardly and to which is secured the shell or casing 19, forming the lower half of the movable portion of the turret. The top wall 20 of the turret is secured to the braces 18 and interposed between the top wall 20 and the shell 19 is the upper shell or casing 21. The top wall 20 is provided with a door 22 mounted upon the hinges 23 and the latch 24, operable from within the turret, serves to keep the door in closed position.

To the upper edge of the shell 11 a plurality of studs 25 are secured having rollers 26 mounted thereon, which are in rolling engagement with the track 27 secured to the inside of the shell 19 near its lower edge. A shell 28 extends from the floor of the vehicle to a point below the upper edge of the shell 11 but is spaced from the shell 11 and above the upper edge of the shell 28 a circumferential flange 29 is secured to the shell 11 which overlies the upper edge of the shell 28. The flange 29 serves to prevent water from entering within the turret; provides ventilation and also prevents a bullet from glancing and entering the interior of the turret. The rapid fire gun 30 may be suspended from a brace 31 that may be either secured to the top wall 20 or may be mounted upon the center axle 12. A slot 32 is formed in the shells 19 and 21 through which slot the end of the rapid fire gun projects whereby the gun may be moved upon its axis, since the gun is pivotally mounted upon an axle 33, and by means of the rack gear 34 and crank 35 carrying a worm at one end in mesh with the teeth on the rack gear 34. Rotatably mounted upon the center axle 12 is a sleeve 36 having bearings 37 and 38 at its upper and lower ends whereby it may

easily rotate around the axle 12 and secured to the sleeve 36 by means of braces 39, is the seat 40.

The braces 10 are so designed as to permit the seat 40 to swing freely within the turret and entirely independent of the upper or revoluble portion of the turret. The braces 10 afford a foot rest for the operator whereby the operator may hold himself in fixed position and thus move the revoluble portion of the turret at will.

By so constructing the turret that only the upper section is movable, the weight of the movable section is greatly reduced and thus there is little tendency for the turret to rotate in the direction of the applied weight when the vehicle is inclined. Furthermore, the weight of the turret is such that, even though the machine gun may be mounted upon it, it may be easily rotated by the operator and by reason of the rollers 26, there is no liability of the upper section of the turret binding.

Having now described my invention, I claim:

1. A revolving turret for motor vehicles comprising, a base, supports secured to said base, a vertical axle, a two part turret one part of which is secured to said supports and the other part revolubly mounted on said axle and a seat revolubly mounted on said axle.

2. A revolving turret for motor vehicles comprising, a base, supports secured thereto and extending outwardly and upwardly from said base, a vertical axle, a two part turret one part of which is secured to said supports and the other part revolubly mounted on said axle and a seat revolubly mounted on said axle and arranged to travel above the outwardly extended portions of said supports.

3. A revolving turret for motor vehicles comprising, a base, supports secured thereto and extending outwardly and upwardly from said base, a vertical axle secured to said base, a two part turret, one part of which is secured to said supports and the other part revolubly mounted on said axle, roller bearings secured to one part of said turret and adapted to bear against the other part and a seat revolubly mounted on said axle.

4. A revolving turret for motor vehicles comprising, a base, supports secured to said base, a two part turret one part of which is fixed to said supports, a vertical axle mounted upon said base, the other part of said turret being revolubly mounted on said axle, a seat revolubly mounted on said axle and a shell surrounding said base and having its upper edge projecting above the lower edge of the fixed portion of the turret.

5. A revolving turret for motor vehicles comprising, a base, supports secured to said base, a two part turret one part of which is fixed to said supports, a vertical axle mounted upon said base, the other part of said turret being revolubly mounted on said axle, a seat revolubly mounted on said axle and a shell surrounding said base and having its upper edge projecting above the lower edge of the fixed portion of said turret but spaced therefrom and a flange secured to said turret and overlying the upper edge of said shell.

6. A revolving turret for motor vehicles comprising, a stationary turret section and a revoluble turret section, in combination with a gun adapted to revolve with said revoluble section and a seat revolubly mounted within said stationary section and capable of revolving independently of revoluble turret section.

JERRY W. DE COU.

Witnesses:
FRANK R. KELLY,
JOHN BJORN.