E. P. HONN.

HEATING DEVICE.

APPLICATION FILED FEB. 9, 1914.

1,200,613.

Patented Oct. 10, 1916.

3 SHEETS—SHEET 1.

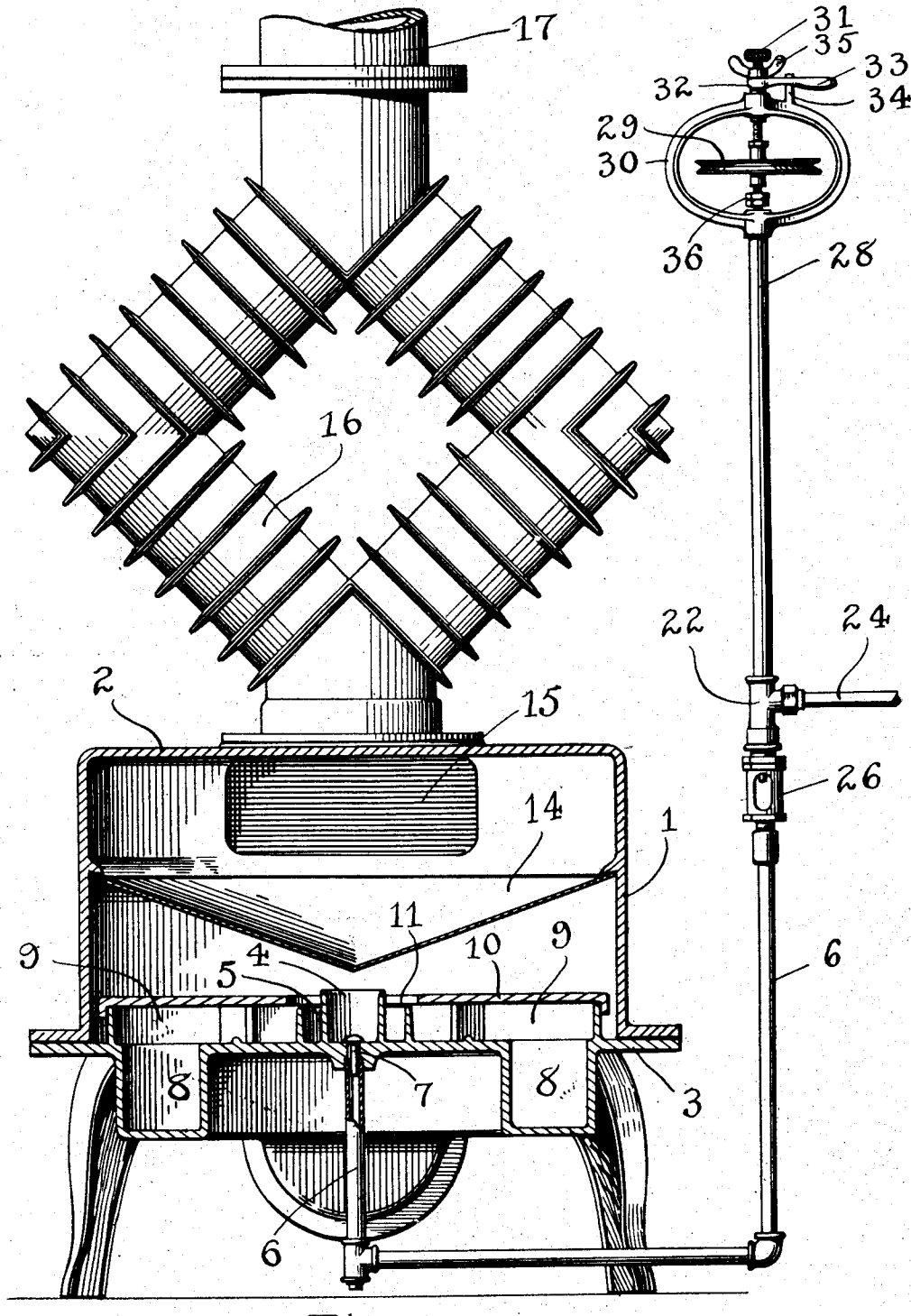

Fig. 1.

Witnesses

Harold O. Van Antwerp

Mae Parsons

Inventor

Earl P. Honn

By Luther V. Moulton

Attorney.

E. P. HONN.

HEATING DEVICE.

APPLICATION FILED FEB. 9, 1914.

1,200,613.

Patented Oct. 10, 1916.

3 SHEETS—SHEET 2.

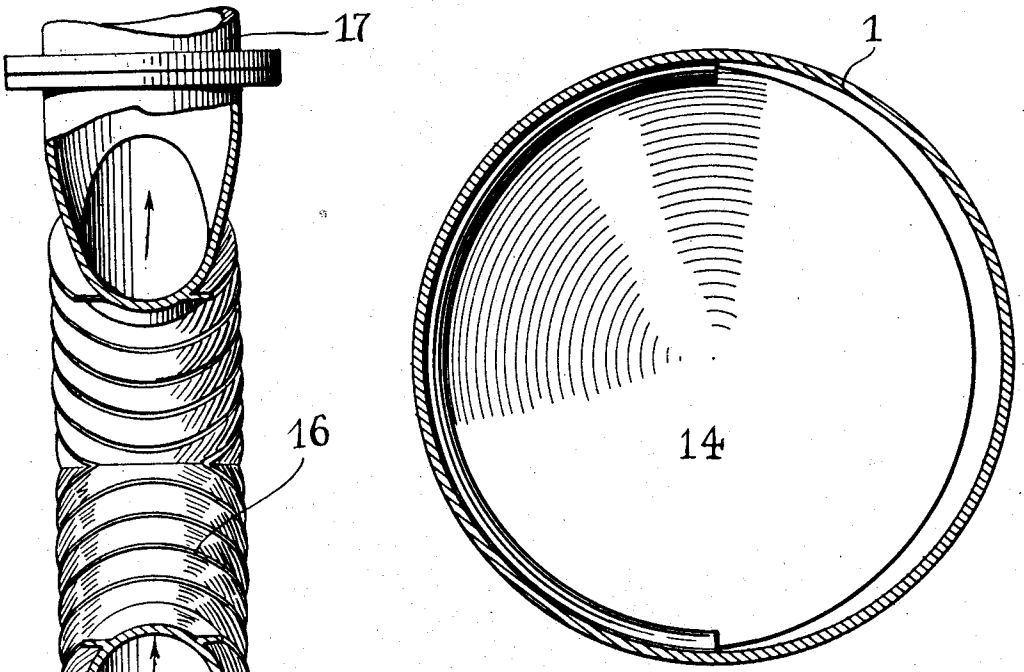

Fig. 3.

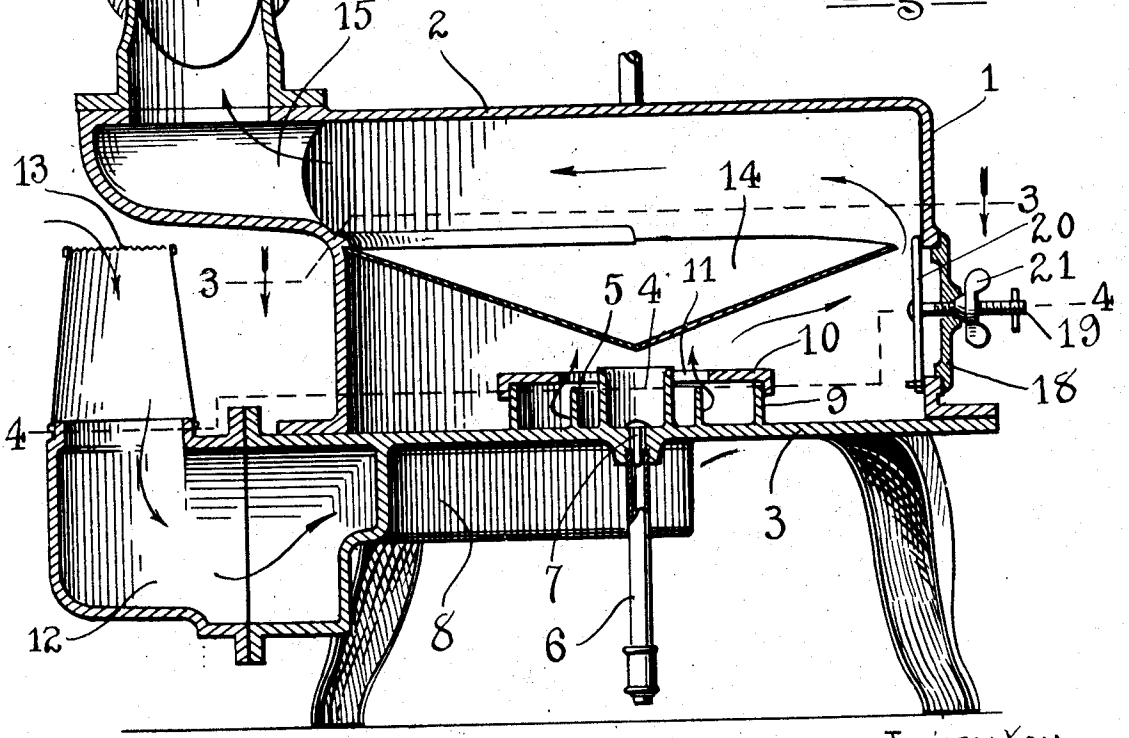

Fig. 2.

Witnesses

Harold O. Van Antwerp

Mae Rankin

Inventor

Earl P. Honn

By Luther V. Moulton

Attorney.

E. P. HONN.

HEATING DEVICE.

APPLICATION FILED FEB. 9, 1914.

1,200,613.

Patented Oct. 10, 1916.

3 SHEETS—SHEET 3.

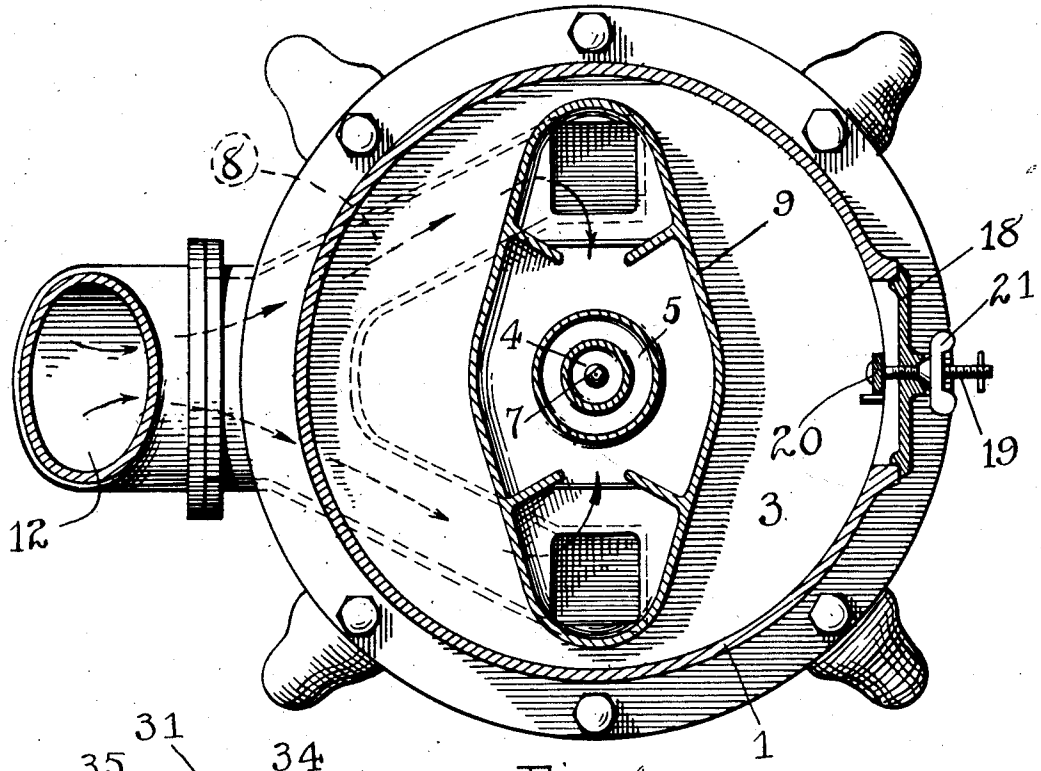

Fig. 4.

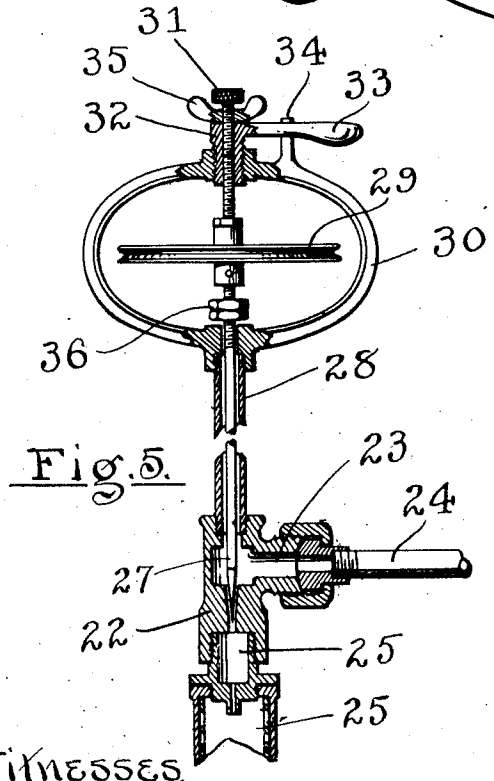

Fig. 5.

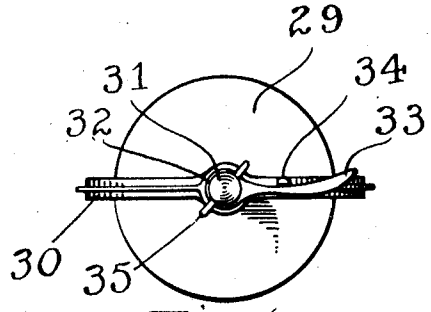

Fig. 6.

Witnesses

Harold O. Van Antwerp

Mae Rankin

Inventor

Earl P. Honn

By Luther V. Moulton

Attorney.

UNITED STATES PATENT OFFICE.

EARL P. HONN, OF GRAND RAPIDS, MICHIGAN.

HEATING DEVICE.

1,200,613. Specification of Letters Patent. Patented Oct. 10, 1916.

Application filed February 9, 1914. Serial No. 817,547.

To all whom it may concern:

Be it known that I, EARL P. HONN, a citizen of the United States of America, residing at Grand Rapids, in the county of Kent and State of Michigan, have invented certain new and useful Improvements in Heating Devices; and I do hereby declare the following to be a full, clear, and exact description of the invention, such as will enable others skilled in the art to which it appertains to make and use the same.

This invention relates to improvements in heating devices and more particularly to heaters having vapor burners for kerosene or like hydro-carbon fuel, and its object is to provide a heater which will be simple and cheap in construction, effective and economical in operation; to provide the device with an automatic fuel control, and to provide the device with various new and useful features hereinafter more fully described, and particularly pointed out in the claims.

The heater embodying this invention is particularly adapted to be used in places where very little personal attention can be given it, such as private automobile garages, store rooms and like places, and for that reason the flow of hydro-carbon fuel is governed by a thermostatic regulator and the heater itself is so designed that it may be used with entire safety in rooms where combustible gases may be present, and it is also so designed that the maximum amount of heat will be delivered from the fuel consumed and the device is provided with various novel features of construction and arrangement whereby it may be cheaply built, will occupy small space and will be pleasing in appearance as will more fully appear by reference to the accompanying drawings, in which:—

Figure 1 is a transverse sectional elevation of the heater; Fig. 2 is a longitudinal sectional elevation of the same; Fig. 3 is a horizontal section on the line 3—3 of Fig. 2; Fig. 4 is a sectional plan on the line 4—4 of Fig. 2; Fig. 5 is an enlarged sectional elevation of the thermostatic fuel controller; and Fig. 6 is a plan view of the same.

Like numbers refer to like parts in all of the figures.

1 represents the cylindrical body of the heater closed at its upper end, preferably by an integral top 2 and at its lower end by the base 3, which is supported by suitable legs. The burner is located on the said base and comprises a central cup 4 surrounded by a ring 5, both of which are preferably cast integral with the base and the fuel is admitted to the bottom of the said cup through the pipe 6. A check valve 7 of any suitable form, is preferably located at the end of the said pipe to prevent soot, etc., dropping therein and obstructing the passage. The air inlet to the burner is through a bifurcated passage 8, preferably formed on the under side of the base 3 and leading to diametrically opposite sides of the same, where it communicates upward with opposite ends of an elongated chamber 9, the vertical sides of which are preferably integral with the base, the top 10 being a detachable cover having a central orifice 11 surrouding the cup 4 and ring 5. The air enters the passage 8, preferably through an elbow 12 which has a fine wire gauze screen 13 which acts as a fire stop and prevents fire from the burner escaping back through said passage into the room.

An inverted conical deflector 14 is located within the body 1 with its apex directly above the burner, and it engages the rear part of the body, but is spaced away from the front side thereof, thereby causing the heated air to circulate toward the front of the heater in order to pass the deflector and enter the smoke outlet 15 which is located above the deflector and at the rear side of the body.

A divided pipe 16 having heat radiating ribs thereon is preferably used through which the hot products of combustion pass before entering the chimney through the pipe 17, whereby the greater part of the heat is radiated into the room.

The body 1 is provided in its front with a removable door 18 which closes an opening in the body and is retained therein by a bolt 19 attached to a bar 20, which extends across the opening on the inside of the body, said bolt being provided with a wing nut 21 having a conical base which seats in a correspondingly tapered recess in the door, thereby forming an air tight joint.

The thermostatic fuel controller comprises a valve of the so called needle type, having an inlet 23, a fuel supply pipe 24 and an outlet 25 communicating with a fuel pipe 6, preferably through a sight feed device 26. The needle 27 of the said valve has a stem which extends upward through a tubular support 28, the upper end of which is preferably higher than the fuel level and the

upper end of the said stem projects from the tube and is attached to a thermostatic disk 29 located within a ring bracket 30 on the upper end of the tube 28. The disk 29 is of the type which expands when heated and is supported within the bracket by an adjustable screw 31 threaded through a bushing 32, said bushing also being threaded into the bracket and adjustable therein being provided with a lever 33 for that purpose. A stop 34 on the bracket 30 limits the movement of the handle 33 and the screw 31 is provided with a lock nut 35 whereby the adjustment of said screw in the bushing 32 may be maintained and the valve stem 27 is threaded at its upper end and provided with limiting nuts 36 adjustable thereon, whereby the closing movement of the valve may be stopped at a predetermined position. The operation of this device is as follows: Assuming the room in which the heater is located to be cold, the thermostatic wafer 29 will be contracted to its thinnest condition thereby raising the valve 22 from its seat and permitting the fuel free passage therethrough into the cup 4. The fuel is allowed to fill this cup and overflow into the space within the ring 5 and is then lighted through the opening closed by the door 18. The fuel will burn from within the ring 5, heat the walls of the cup 4, and vaporize the fuel therein, which will then also ignite and retain the said walls in heated condition, whereby all fuel subsequently entering the cup will be vaporized and combustion will be maintained as long as the fuel is supplied to the burner. Air to maintain the combustion is drawn through the bifurcated passage 8 and flows through the orifice 11, supplying oxygen to the flame. The hot walls of the passage heat the air as it passes therethrough, which aids in the vaporization of the fuel. The hot products of combustion rise and are directed by the deflector 14 to the front of the body and thence back to the outlet 15, thoroughly heating the sides and top of the body. Whatever heat remains in the said products is absorbed by the pipe 16 and radiated into the room by the same and the ribs thereon. As the temperature in the room rises the wafer 29 will expand, forcing the needle valve toward its seat and restrieting the flow of the fuel, and when the desired temperature has been attained the valve will be sufficiently closed to permit the passage of only enough fuel to keep the flame in the burner, only sufficient to maintain the temperature constant. In this position the limiting nut 36 will engage the bracket 30, preventing the valve from further closing should the temperature of the room rise due to external influence, thereby insuring a continuous flame at the burner.

The degree of temperature to be maintained in the room may be regulated by means of the adjusting screw 31, by which the disk 29 may be raised or lowered, necessitating more or less expansion to close the valve 22.

It is often desirable to raise the temperature in the room for short periods, and to enable this to be done without interfering with the normal adjustment of the regulator the bushing 32 may be turned by means of the lever 33, which will raise the disk and needle valve, permitting more fuel to pass to the burner, and when it is desired to again reduce the temperature to the normal degree the bushing may be rotated to its former position by turning the lever 33 back against the stop 34.

What I claim is:—

1. A heater comprising a main chamber having a base, said base having a central aperture therein, a flange extending upwardly from said base and constituting an elongated chamber, a cover for said chamber provided with a central aperture, a collar surrounding the aperture and the base and extending through the aperture in the said cover, a second flange formed integral with the base intermediate the outer flange and the collar and terminating short of said cover, the said collar and the second flange forming a burner, and means for supplying fuel through the aperture in the base to the burner.

2. A heater comprising a main chamber having a base, said base having a central aperture therein, a burner surrounding said aperture, means for supplying fuel through said aperture to said burner, a pipe extending from said main chamber for the passage of the hot products of combustion, said pipe diverging at its lower end into two heat radiating pipes, said radiating pipes converging at their upper ends into one pipe and connected to the chimney, and heat radiating ribs on the outside of said radiating pipes.

In testimony whereof I affix my signature in presence of two witnesses.

EARL P. HONN.

Witnesses:
HAROLD O. VAN ANTWERP,
HAZEL M. FOSTER.