US 20090321490A1

(19) United States

(12) Patent Application Publication

Groene et al.

(10) Pub. No.: US 2009/0321490 A1

(43) Pub. Date: Dec. 31, 2009

(54) **LAPTOP COMPUTER CARRIER**

(75) Inventors: **Ralf Groene**, Kirkland, WA (US); **Monique Chatterjee**, Seattle, WA (US); **Lindsey Michelle Pickett**, Seattle, WA (US)

Correspondence Address:
MICROSOFT CORPORATION
ONE MICROSOFT WAY
REDMOND, WA 98052 (US)

(73) Assignee: **Microsoft Corporation**, Redmond, WA (US)

(21) Appl. No.: **12/163,875**

(22) Filed: **Jun. 27, 2008**

Publication Classification

(51) **Int. Cl.**
A45C 15/00 (2006.01)
A45F 3/14 (2006.01)

(52) **U.S. Cl.** **224/576**; 224/257

(57) **ABSTRACT**

Various embodiments of laptop computer carriers with simple, low cost constructions are disclosed herein. One disclosed embodiment comprises a shoulder strap, a hinge pocket that forms a closed loop with the shoulder strap and that is configured to hold a hinged spine of the laptop computer, and a retainer coupled with the strap and configured to retain a side edge of the base portion of the laptop computer.

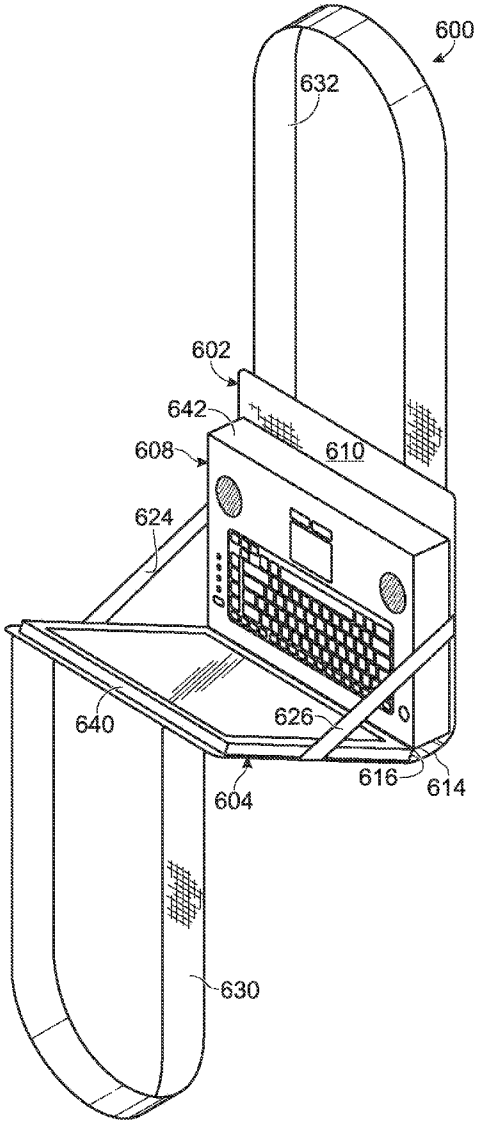

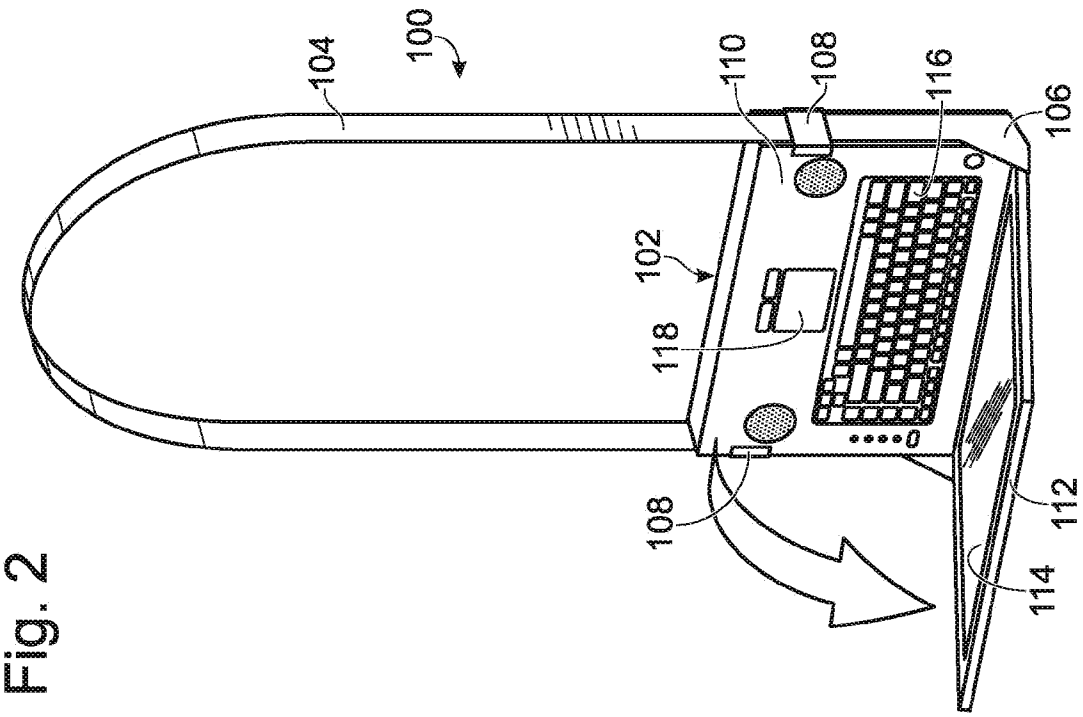

Fig. 2

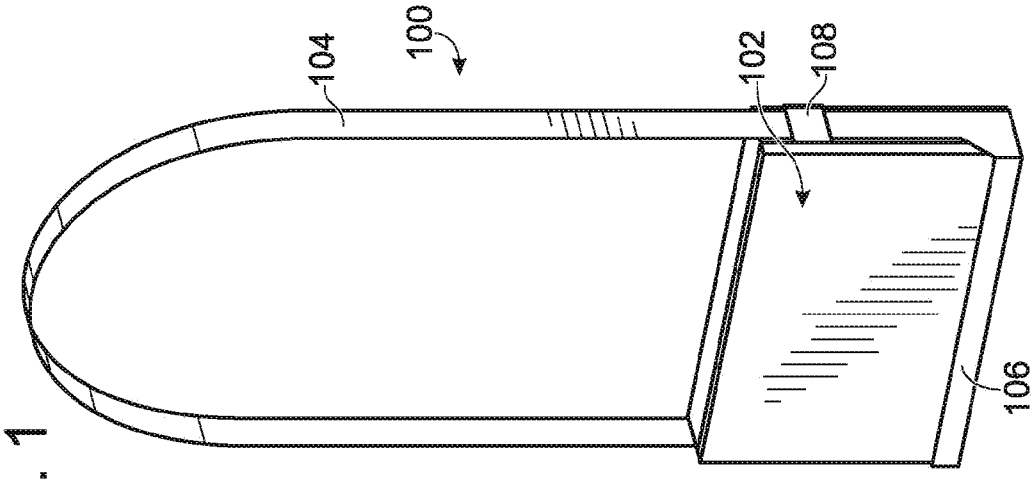

Fig. 1

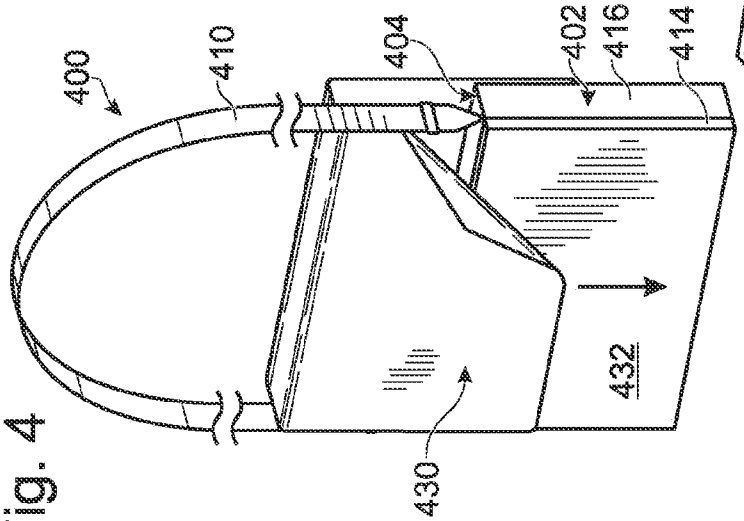

Fig. 4

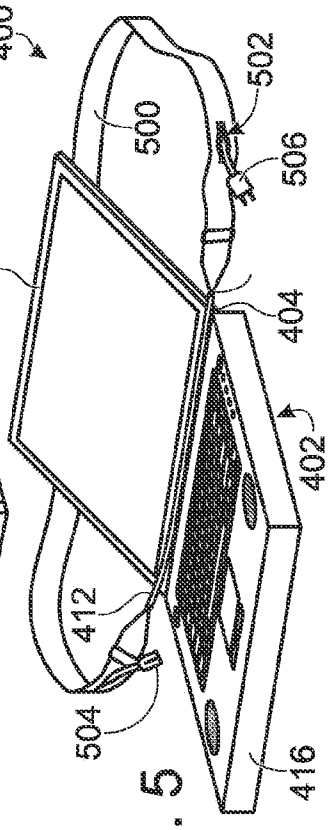

Fig. 5

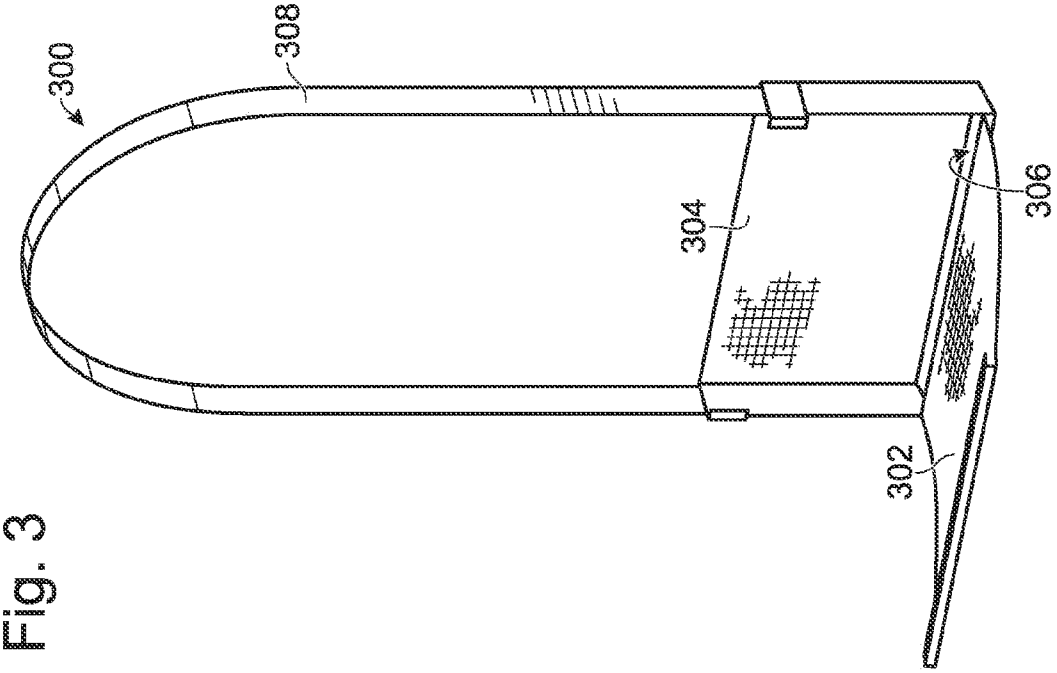

Fig. 3

Fig. 6

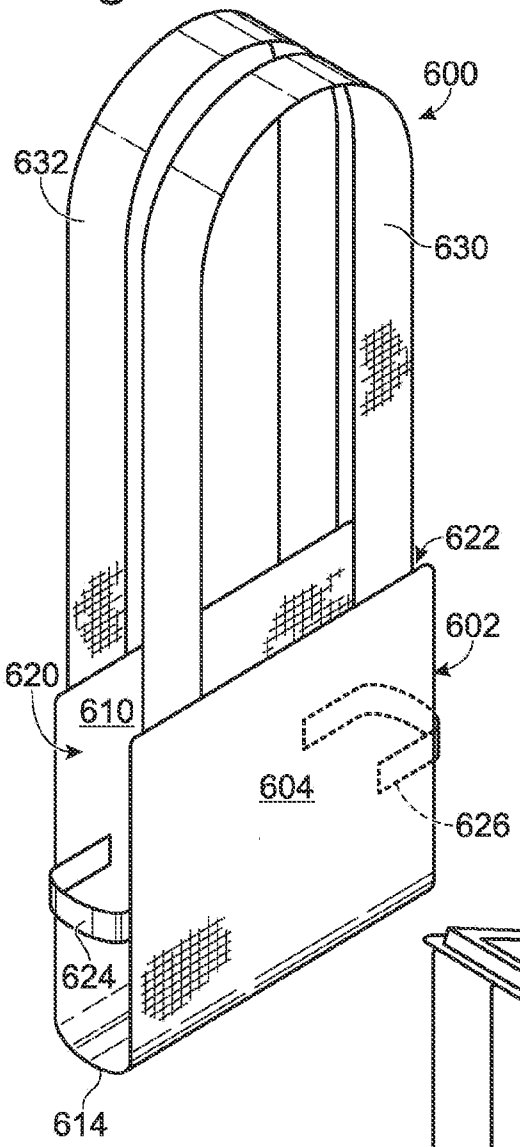
600
632
630
622
602
620
610
604
626
624
614

Fig. 7

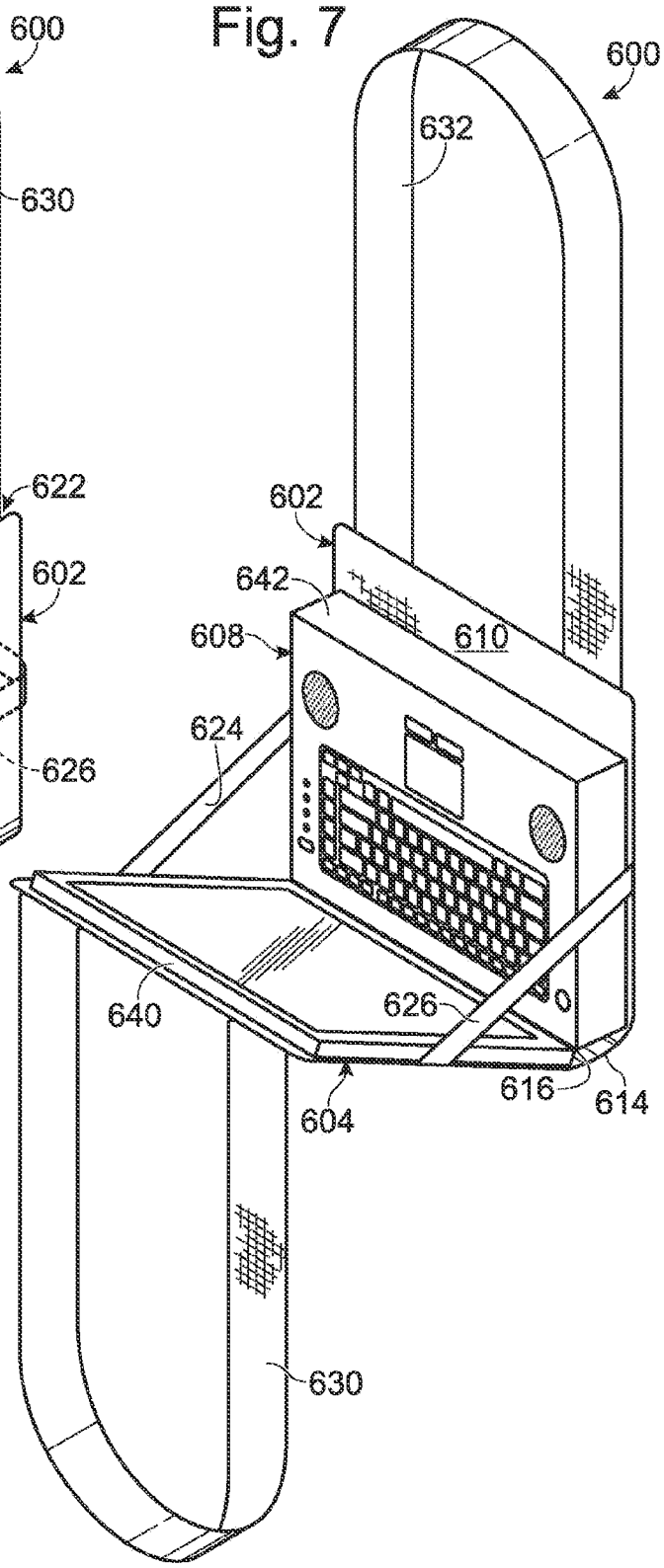
600
632
602
642
608
610
624
640
626
616
614
604
630

Fig. 8

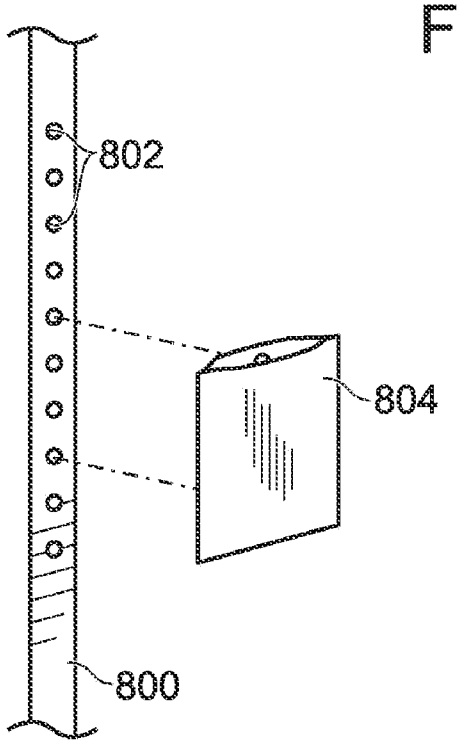

Fig. 9

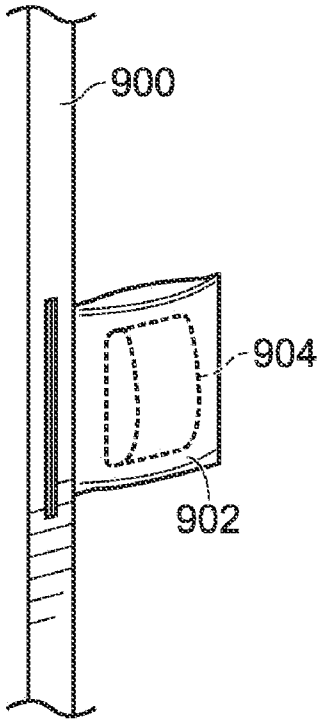

LAPTOP COMPUTER CARRIER

BACKGROUND

[0001] Various devices have been proposed for transporting laptop computers in a hands-free manner. One commonly used carrier is a briefcase-like bag including a pouch or compartment for holding a laptop computer, and one or shoulder straps connected to the pouch to allow a user to support the weight of the pouch on a shoulder. Such carriers also may include pockets for holding power cords, mice, and other such accessories.

[0002] Such carriers may be made of many separate parts, and may take many manufacturing steps to assemble the parts. Therefore, such carriers may be relatively expensive to manufacture. Further, a laptop computer positioned in such a carrier may be difficult to use without removing the laptop computer from the carrier. The effort involved in removing a laptop computer from a carrier for use and then placing it back in the carrier after use may discourage various types of user sessions, including but not limited to use during transport.

SUMMARY

[0003] Accordingly, various embodiments of laptop computer carriers with simple, low cost constructions are disclosed herein. For example, one disclosed embodiment comprises a shoulder strap, a hinge pocket that forms a closed loop with the shoulder strap and that is configured to hold a hinged spine of the laptop computer, and a retainer coupled with the strap and configured to retain a side edge of the base portion of the laptop computer. In this manner, a user may open and use the laptop computer while the laptop computer is positioned in the carrier.

[0004] This Summary is provided to introduce a selection of concepts in a simplified form that are further described below in the Detailed Description. This Summary is not intended to identify key features or essential features of the claimed subject matter, nor is it intended to be used to limit the scope of the claimed subject matter. Furthermore, the claimed subject matter is not limited to implementations that solve any or all disadvantages noted in any part of this disclosure.

BRIEF DESCRIPTION OF THE DRAWINGS

[0005] FIG. **1** shows a first embodiment of a laptop computer carrier, with a laptop computer in a closed configuration positioned in the carrier.

[0006] FIG. **2** shows the embodiment of FIG. **1**, with the laptop computer in an opened configuration.

[0007] FIG. **3** shows another embodiment of a laptop computer carrier.

[0008] FIG. **4** shows a partially exploded view of another embodiment of a laptop computer carrier.

[0009] FIG. **5** shows the embodiment of FIG. **4**, with the laptop computer in an opened configuration and with the protective cover removed for clarity, and also shows an embodiment of a shoulder strap comprising an integrated power cord.

[0010] FIG. **6** shows another embodiment of a laptop computer carrier.

[0011] FIG. **7** shows the embodiment of FIG. **6**, with a laptop computer in an opened configuration positioned in the carrier.

[0012] FIG. **8** shows embodiments of a laptop computer carrier shoulder strap and a modular accessory pocket partially attached thereto.

[0013] FIG. **9** shows an embodiment of a shoulder strap comprising an integrated accessory pocket.

DETAILED DESCRIPTION

[0014] FIGS. **1** and **2** shows a first embodiment of a carrier **100** for a laptop computer **102**. The carrier **100** comprises a shoulder strap **104** and a hinge pocket **106** that forms a closed loop with the shoulder strap and that is configured to hold a hinged spine of the laptop computer **102**. Further, one or more retainers **108** coupled with the strap are configured to retain a side edge of a base portion **110** (i.e. processor/keyboard portion) of the laptop computer **102**, but not a display portion **112**. This allows the laptop computer **102** to be opened when positioned in the carrier **100**. In the depicted embodiment, one retainer **108** is disposed on each side of the shoulder strap **104** such that each side edge of the base portion **110** of the laptop computer **102** is secured to the shoulder strap **104**. However, any other suitable number of and/or configuration of retainers may be used, including but not limited to a single retainer.

[0015] Referring to FIG. **2**, the laptop computer **102** may be opened with the shoulder strap **104** still positioned over a user's shoulder. When the laptop computer **102** is opened, a display screen **114** on the display portion **112** of the laptop computer faces toward the user. Likewise, the base portion **110** of the laptop computer **102** is positioned such that a keyboard **116**, mouse pad **118**, or other input device is oriented correctly relative to the user. This allows a user may use the laptop computer **102** without removing the laptop computer **102** from the carrier, in contrast to a briefcase-like bag. Once the user has finished using the computer, the user may simply close the screen portion of the laptop to end the use session, without having to put the laptop computer **102** back into the carrier **100**, and without having to put the carrier **100** back over a shoulder.

[0016] In this manner, a user may use the laptop computer **102** positioned in the carrier **100** either while sitting or standing. In the standing use example, the display screen **114** faces upwardly toward the user, while the base portion **110** of the laptop computer rests against the user's body. The display screen **114** may be supported in this position by the friction in the hinge of the laptop computer **102**, as well as by the shape of the laptop hinge pocket **106**. In either the sitting use or standing use example, the carrier **100** permits a user to access and open the laptop computer **102** while standing or walking, thereby allowing the user to quickly reference a desired item on the laptop computer **102** without removal from the carrier. This may help to improve the computer user experience during "shuttling" (i.e. moving from space to space, such as between conference rooms or classrooms), as the laptop computer may be used for short periods of time without time-consuming unpacking and repacking.

[0017] In contrast to briefcase-style laptop bags, the carrier **100** may be manufactured using a comparatively smaller number of parts and/or manufacturing processes. For example, the shoulder strap **104** and the hinge pocket **106** may be formed from just one or two fabric sections joined together, for example, in an end-to-end manner to form a closed loop. Further, the carrier **100** may utilize less material than that used to construct a briefcase-like bag for a similarly-sized laptop computer, thereby reducing materials costs. Fur-

ther, the retainers **108** may comprise simple clips made of plastic, metal, sturdy fabric, etc., and therefore also may be available at low cost.

[0018] In some embodiments, a carrier may include a protective cover or covers that protect the outer surfaces of a laptop computer positioned in the carrier, and that allow the computer to be substantially enclosed within the carrier when not in use. FIG. **3** shows an embodiment of a carrier **300** comprising a protective front cover **302** configured to extend over an outer face of the screen portion of a laptop computer, and a protective back cover **304** configured to extend over an outer face of the base portion of the laptop computer. The carrier further comprises a pocket **306** to accommodate a hinged spine of the laptop computer, and a shoulder strap **308**.

[0019] The protective front cover **302** of the carrier is configured to be attached to the display screen portion of a laptop computer. In this manner, the front cover **302** automatically opens when a laptop computer positioned in the carrier **300** is opened. Thus, as opposed to other laptop computer carriers, the carrier **300** may be opened with no additional user-performed acts (such as unzipping zippers or opening other fasteners) other than opening the laptop computer.

[0020] The front cover **302** may be configured to be attached to the screen portion of a laptop computer in any suitable manner. In the depicted embodiment, the front cover **302** includes a hooked edge **304** configured to hook over a top edge of a screen portion of a laptop computer. In other embodiments, the front cover may include a sleeve configured to fit over the top edge of the screen portion of a laptop computer, a hook-and-loop fastening mechanism, or any other suitable attachment mechanism that allows the front cover **302** to be easily attached to and removed from the laptop computer. Likewise, in the depicted embodiment, each side of the back cover **304** is depicted as being fixed to the shoulder strap **308**. However, it will be understood that the back cover **304** may have any other suitable configuration, and may be configured to be connected to the base portion of a laptop computer in a similar manner as the front cover **302** connects to the screen portion of a laptop computer. Further, either the front cover **302** and/or the back cover **304** may be configured to cover the small space between the base portion and the screen portion of the laptop computer when the laptop computer is closed. In some embodiments, the back cover **304** may also be configured to provide ventilation, for example via one or more openings, and/or via a suitable choice of material.

[0021] FIGS. **4** and **5** show another embodiment of a carrier **400**. The carrier **400** is configured to support a laptop computer **402** by hanging the laptop computer **402** from its hinged spine **404** while the laptop computer **402** is in a closed configuration. The carrier **400** comprises a shoulder strap **410**, and a computer support sling **412** that forms a closed loop with the shoulder strap **410**. The sling is configured to fit between a screen portion **414** and a base portion **416** of the laptop computer **402** when the laptop computer **402** is in a closed configuration, as shown in FIG. **4**. Likewise, the carrier **400** may be removed or inserted from the laptop computer when the laptop computer is in an opened configuration, as shown in FIG. **5**.

[0022] The carrier **400** also comprises a cover **430** coupled to the shoulder strap **410**. The cover is shown exploded upwardly from the laptop computer in FIG. **4**, and is omitted from FIG. **5**. The cover **430** is configured to at least partially cover a first face **432** and a second face (not visible in FIG. **4**) of the laptop computer when the laptop computer is supported by the sling **404**. The cover **406** may be permanently coupled to the shoulder strap **410** (for example, sewn, glued, etc.), or may be removably coupled to the shoulder strap **410** (for example, via buttons, snaps, hook and loop connectors, etc.) so that a user can choose to use the cover on a selective basis. The cover **430** may be formed from any suitable material or materials, including but not limited to flexible materials such as suitable fabrics, polymer sheets, leather, more rigid materials, such as plastic materials, supported fabrics, composite materials, and/or combinations thereof.

[0023] The computer support sling **412** may be formed from a length of wire having an outer protective coating. A protective coating may provide a softer surface of contact against the computer than if the wire were uncoated. Further, a protective coating also may provide a higher friction outer surface than uncoated wire, and therefore may help to prevent the laptop computer **402** from sliding on the computer support sling **412** during use. In other embodiments, the computer support sling **412** may be formed from an uncoated wire, a plastic or fabric cord, a strap, etc.

[0024] Referring to FIG. **5**, the carrier **400** is depicted with an embodiment of a shoulders strap **500** comprising an integrated power cord **502** configured to connect the laptop computer **402** to a power supply. This may allow a user to conveniently connect the laptop computer **402** to an electrical outlet without having to carry a separate cord. In the depicted embodiment, the integrated power cord **502** runs substantially the length of the shoulder strap **500** within an interior of the shoulder strap. A first connector **504** configured to connect to the laptop computer **402** extends from the shoulder strap adjacent to one end of the shoulder strap **500**, and a second connector **506** configured to connect to an electrical outlet extends from the shoulder strap **500** adjacent to another end of the shoulder strap **500**. Because only a small portion of the integrated power cord **502** is located outside of the shoulder strap **500**, the integrated power cord **502** may not be noticeable by a user when carrying the laptop computer.

[0025] In some embodiments, one or both ends of the shoulder strap **500** may be configured to be selectively connected to or disconnected from the computer support sling **412** to facilitate the use of the integrated power cord **500**. Likewise, in some embodiments, some length of the integrated power cord **502** may be configured to be pulled from the shoulder strap **500** during use and then inserted or retraced back into the shoulder strap **410** for transport. In such embodiments, the connectors **504** and **506** may be concealed within the shoulder strap **500** when not in use, and pulled from the shoulder strap **500** only during use. While shown in the context of the carrier embodiment of FIGS. **4-5**, it will be appreciated that a shoulder strap with an integrated power cord may be used with any suitable laptop computer carrier, including but not limited to other embodiments discussed herein.

[0026] FIGS. **6** and **7** show another embodiment of a carrier **600** for a laptop computer. Carrier **600** comprises a cover **602** including a first expanse **604** configured to support a first face **606** of a laptop computer **608**, a second expanse **610** configured to support a second face **612** of the laptop computer **608**, and a bottom **614** connecting the first expanse **604** and the second expanse **610**, wherein the bottom **614** is configured to support a hinged spine **616** of the laptop computer **608**.

[0027] The first expanse **604**, second expanse **610**, and bottom **614** define open first and second sides **620**, **622** of the cover **602**. A first elastic member **624** and a second elastic

member **626** extend between the first expanse **604** and the second expanse **610** to connect first and second sides of the first and second expanses **604**, **610** at locations effective to prevent the laptop computer **608** from sliding out of the open first side **620** and open second side **622**, respectively. The carrier **600** also comprises a first shoulder strap **630** extending from the first expanse **604** and a second shoulder strap **632** extending from the second expanse. A user may carry the laptop computer **608** securely within the carrier **600** by placing both shoulder straps over a shoulder. Then, when a user desires to use the laptop computer **608** while standing or sitting, the user may remove one of the shoulder straps and fold the screen portion **640** of the laptop computer downwardly, as depicted in FIG. **7**. The elasticity of the first and second elastic members **624**, **626** allow the user to open the laptop computer **608** when the laptop computer **608** is positioned in the carrier **600**, while the locations of the elastic members **624**, **626** prevent the laptop computer **608** from sliding out of the open sides **620**, **622** of the carrier **600** both during computer transport and computer use.

[0028] The first expanse **604**, second expanse, **610**, and bottom **614** may be made from any suitable material or materials, and may have any suitable construction. For example, in some embodiments, the first expanse **604**, second expanse **610**, and bottom **614** may comprise a single piece of a flexible material, while in other embodiments two or more of these structures may be formed from different pieces of material joined together. Where additional strength is desired, a sandwich of two or more sheets of material may be used to form these structures. Additionally, any or all of the first expanse **604**, second expanse **610**, and bottom **614** may include a stiffener or reinforcement such as a foam or plastic sheet, etc., to make the first expanse **604**, second expanse **610**, and/or bottom **614** rigid.

[0029] Each of the above-described embodiments of carriers may offer various advantages over briefcase-style carriers. For example, the embodiments described herein may be easier and less expensive to manufacture than briefcase-style laptop carriers. Further, various embodiments described herein may enable a user to use a laptop carrier without removing the laptop computer from the carrier, whether standing or sitting. Therefore, the embodiments described herein may improve the shuttling experience by simplifying the process of accessing a laptop computer for a short user session.

[0030] In some embodiments, a carrier may be configured to accept the attachment of one or more accessories to accommodate peripherals and other accessories that a user may wish to carry. Examples of such accessories include, but are not limited to, a mouse or other input device, a power cord, a spare battery, etc. To accommodate such accessories, a carrier may comprise one or more pockets, and/or may comprise one or more connectors that are configured to accept the selective attachment of a modular accessory pocket.

[0031] FIG. **8** depicts an embodiment of a shoulder strap **800** comprising a plurality of connectors **802** each configured to accept attachment of an accessory, such as a modular pocket **804**. In the depicted embodiment, the connectors comprise snaps configured to accept the attachment of an accessory via a plurality of complimentary snaps located on the accessory. However, it will be understood that the shoulder strap **800** may comprise any other suitable type of connector or connectors. Likewise, it will be understood that carrier may comprise either fewer or more connectors **802** than those shown, and some embodiments may include only a single connector. Further, the carrier may be configured to accept the attachment of a single accessory, or multiple accessories. Additionally, while the connectors **802** of the depicted embodiment are disposed on a shoulder strap **800**, it will be understood that one or more connectors may alternatively or additionally be disposed on another part of a carrier, such as on any of the above-described covers **302**, **430**, **602**.

[0032] In other embodiments, a carrier may comprise one or more integrated pockets for carrying accessories. FIG. **9** shows an embodiment of a shoulder strap **900** that comprises a pocket **902** configured to hold a portable mouse **904** or other such accessory. The depicted pocket **902** has a depth greater than a width of the shoulder strap **900** to accommodate accessories of larger sizes than the shoulder strap width. However, in other embodiments, a pocket may have a depth no greater than a width of the shoulder strap **900**. It will be understood that the pocket **902** may have any suitable depth relative to the width of the shoulder strap **900**.

[0033] While the concepts disclosed herein are described in the context of specific embodiments, it will be understood that configurations and/or approaches described herein are exemplary in nature, and that these specific embodiments or examples are not to be considered in a limiting sense, because numerous variations are possible. The subject matter of the present disclosure includes all novel and nonobvious combinations and subcombinations of the various configurations, features, functions, and/or properties disclosed herein, as well as any and all equivalents thereof.

1. A carrier for a laptop computer, the laptop computer comprising a screen portion connected to a base portion at a hinged spine, the carrier comprising:

a shoulder strap;

a hinge pocket that forms a closed loop with the shoulder strap and that is configured to hold the hinged spine of the laptop computer; and

a retainer coupled with the strap and configured to retain a side edge of the base portion of the laptop computer.

2. The carrier of claim **1**, further comprising a protective cover configured to attach to the screen portion of the laptop computer and extend over an outer face of the screen portion of the laptop computer.

3. The carrier of claim **1**, further comprising a retainer for each side of the laptop computer.

4. The carrier of claim **1**, further comprising a plurality of connectors disposed on the shoulder strap, wherein each connector is configured to accept attachment of an accessory with a complementary connector.

5. The carrier of claim **4**, wherein the accessory comprises a modular pocket.

6. The carrier of claim **1**, wherein the shoulder strap comprises an integrated pocket.

7. The carrier of claim **1**, wherein the shoulder strap comprises an integrated power cord configured to connect the laptop computer to a power supply.

8. The carrier of claim **7**, wherein the integrated power cord runs substantially a length of the shoulder strap and comprises connectors that extend from the shoulder strap at locations adjacent to each end of the shoulder strap.

9. A carrier for a laptop computer having a screen portion connected to a base portion at a hinged spine, the device comprising:

a shoulder strap;

a computer support sling that forms a closed loop with the shoulder strap and that is configured to fit between the screen portion and the base portion of the laptop computer when the laptop computer is in a closed configuration; and

a cover coupled to the shoulder strap and configured to at least partially cover an outside face and an inside face of the laptop computer when the laptop computer is supported by the sling.

10. The carrier of claim **9**, wherein the sling comprises a wire having a protective coating.

11. The carrier of claim **9**, further comprising a plurality of connectors disposed on the shoulder strap, wherein each connector is configured to accept attachment of an accessory with a complementary connector.

12. The carrier of claim **11**, wherein the accessory comprises a modular pocket.

13. The carrier of claim **9**, wherein the shoulder strap comprises an integrated pocket.

14. The carrier of claim **9**, wherein the shoulder strap comprises an integrated power cord configured to connect the laptop computer to a power supply.

15. A carrier for a laptop computer, comprising:

a cover comprising a first expanse configured to support a first face of the laptop computer, a second expanse configured to support a second face of the laptop computer, and a bottom connecting the first expanse and the second expanse and configured to support a hinged spine of the laptop computer, the first expanse, second expanse and bottom defining an open first side and an open second side;

a first elastic member extending between and connecting a first side of the first expanse to a first side of the second expanse;

a second elastic member extending between and connecting a second side of the first expanse to a second side of the second expanse;

a first shoulder strap extending from the first expanse; and

a second shoulder strap extending from the second expanse.

16. The carrier of claim **15**, wherein the first and second expanse are flexible.

17. The carrier of claim **15**, wherein the first and second expanse are rigid.

18. The carrier of claim **15**, wherein one or more of the first shoulder strap and the second shoulder strap comprises a plurality of connectors each configured to accept attachment of an accessory having a complementary connector.

19. The carrier of claim **15**, wherein one or more of the first shoulder strap and the second shoulder strap comprises an integrated pocket.

20. The carrier of claim **15**, wherein one or more of the first shoulder strap and the second shoulder strap comprises an integrated power cord configured to connect the laptop computer to a power supply.

* * * * *