(No Model.)

E. WESTON.

ELECTRICAL INDICATOR.

No. 340,399. Patented Apr. 20, 1886.

Fig. 1.

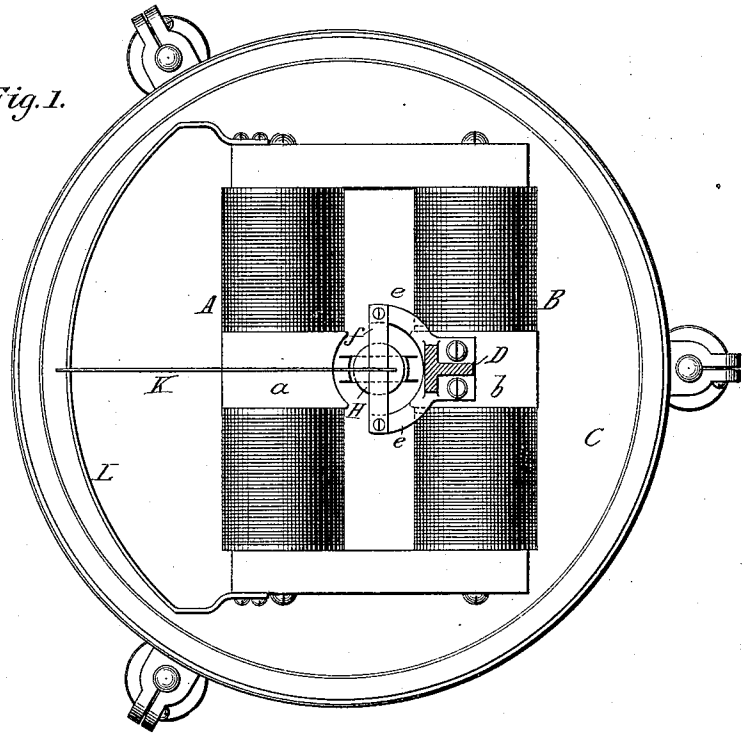

Fig. 3.

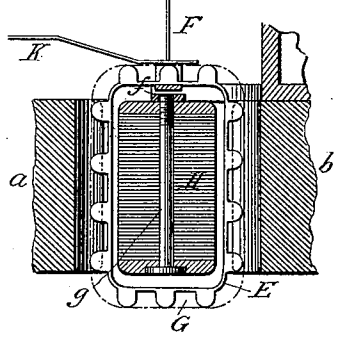

Fig. 2.

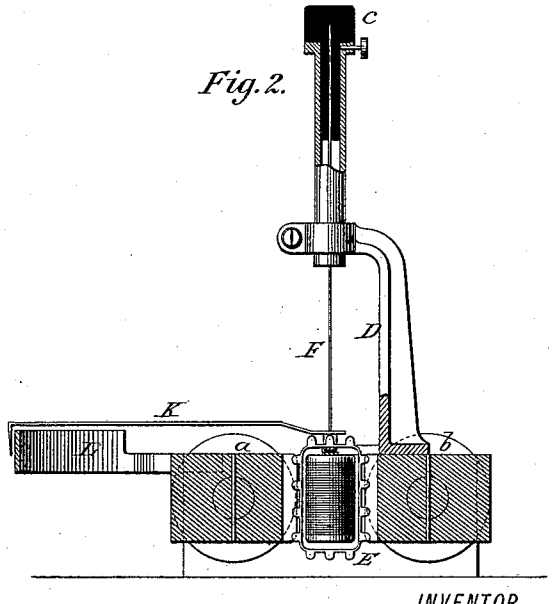

WITNESSES:

J. Daniel Compton.

Raymond L. Barnes.

INVENTOR

Edward Weston

BY

Parker W. Page.

ATTORNEY

UNITED STATES PATENT OFFICE.

EDWARD WESTON, OF NEWARK, NEW JERSEY, ASSIGNOR TO THE UNITED STATES ELECTRIC LIGHTING COMPANY, OF NEW YORK, N. Y.

ELECTRICAL INDICATOR.

SPECIFICATION forming part of Letters Patent No. 340,399, dated April 20, 1886.

Application filed October 13, 1885. Serial No. 179,769. (No model.)

To all whom it may concern:

Be it known that I, EDWARD WESTON, a subject of the Queen of Great Britain, and a resident of Newark, in the county of Essex and State of New Jersey, have invented certain new and useful Improvements in Electrical Indicators, of which the following is a specification, reference being had to the drawings accompanying and forming a part of the same.

My invention is an improvement on an apparatus shown and described by me in a patent granted to me January 12, 1886, No. 334,145.

I shall first describe by reference to the accompanying drawings the nature of the device or apparatus to which said improvement pertains, and then indicate more particularly the part in which my invention resides.

Figure 1 is a plan view of an electrical indicator. Fig. 2 is a vertical section of the same. Fig. 3 is an enlarged sectional view of the movable part or coil used in the same.

Similar letters of reference indicate corresponding parts in the several figures.

I employ a magnetic system in this case formed by two cores, A B, with pole-pieces *a b*, the cores being wound to produce consequent poles of unlike sign in the said pole-pieces. These are mounted on an ordinary leveling-stand, C. To one of the pole-pieces, as *b*, is fixed a supporting-arm, D, carrying at its end an adjustable insulating-plug, *c*. From this plug is suspended a bobbin, E, containing a coil, G, of insulated wire. (Shown in dotted lines in Fig. 3.) The support for this bobbin and coil is what is termed a "filar torsional support," and may be a single wire, as F, or two wires, as described in my application referred to.

Provision is made for passing a current through the coil without impeding its movement, and this may be done in any well-known way—as, for example, by the means shown in my Patent No. 334,145, above referred to.

The bobbin E is of non-magnetic material; but to give greater strength to the magnetic field in which it moves, I place a cylindrical magnetic core, H, in it, which core is stationary, being supported by rigid connection to the cross-piece *f*, secured to two arms, *e e*.

The bobbin or coil carries a pointer, K, which sweeps over a scale on the bar L.

The magnets are constructed with special reference to producing a uniform or symmetrical field in which the lines of force are substantially parallel, and the coils of the magnets are in circuit with the suspended coil G.

In using the instrument it may be connected directly in the main circuit; but it is usually in a branch or derived circuit to the main, so as to be affected by a comparatively small portion of the entire current. Normally the coil G is in a plane parallel to the lines of magnetic force; but by the passage of a current through it a tendency is imparted to it to assume a position at right angles to the lines of force. This tendency is opposed by the filar support, so that it assumes an intermediate position, which corresponds to the electromotive force of the current passing through it. In order to secure these results, the magnet-coils are so constructed or oppose such resistance to the current that they magnetize the field far below the point of saturation with any current with which the instrument is likely to be used. It follows, therefore, that the intensity of the magnetic field corresponds more or less exactly with the strength of the current.

As thus described, the instrument is similar to others previously described by me.

My improvement consists in using a sectional magnetic core, H, in lieu of a solid iron cylinder. I have found that the working of the instrument is greatly affected by this, and that it works with far greater accuracy and delicacy when a sectional core is used. The core I build up with a number of thin plates or disks strung on a central rod, *g*, and clamped together. The disks are separated by air-spaces, by thin sheets of paper, or any other insulating material, which fills either partially or entirely the spaces between the disks, and which prevents the circulation in the core of induced currents that would otherwise tend to impair the accurate working of the instrument.

Not only is this improvement applicable to this particular form of instrument, but to all others constructed on the same principle, and it adds very greatly to the usefulness and efficiency of the same.

What I claim is—

1. The combination, with the poles of a magnetic system, of a coil suspended within the field formed thereby, and capable of a movement across the lines of force, a stationary sectional magnetic core about which the coil is arranged to move, means for opposing the movement of the coil, connections for passing a current through it, and a pointer for indicating its movement, all as herein set forth.

2. The combination, with magnetic poles forming a uniform or symmetrical field, of a coil suspended within said field so as to be capable of movement across the lines of force, a stationary sectional magnetic core within said coil, means for passing a current through the coil, and a pointer and scale for indicating its changes of positions, as described.

3. The combination, with the poles of a magnetic system, of a supporting arm or frame secured thereto, a coil suspended from said arm in the magnetic field, and capable of a given movement across the lines of force, a stationary sectional magnetic core within the coil and secured to the poles of the magnets, and a pointer and scale for indicating the changes of position of the coil, substantially as described.

4. In an electrical indicator or measuring-instrument, the combination, with a coil movable in the magnetic field, of a stationary core within said coil, composed of iron sections with insulating material between them.

5. In an electrical indicator or measuring-instrument, the combination, with a coil movable in the magnetic field, of a stationary cylindrical core composed of a central rod with iron plates or disks strung thereon and separated by an insulating substance, as set forth.

EDWARD WESTON.

Witnesses:

RICHARD WM. BLOEMEKE,
FRANK N. CRANE.