Nov. 5, 1940. H. E. KNUPP 2,220,572

GAS BURNER

Filed Feb. 2, 1940 2 Sheets-Sheet 1

Fig. 1.

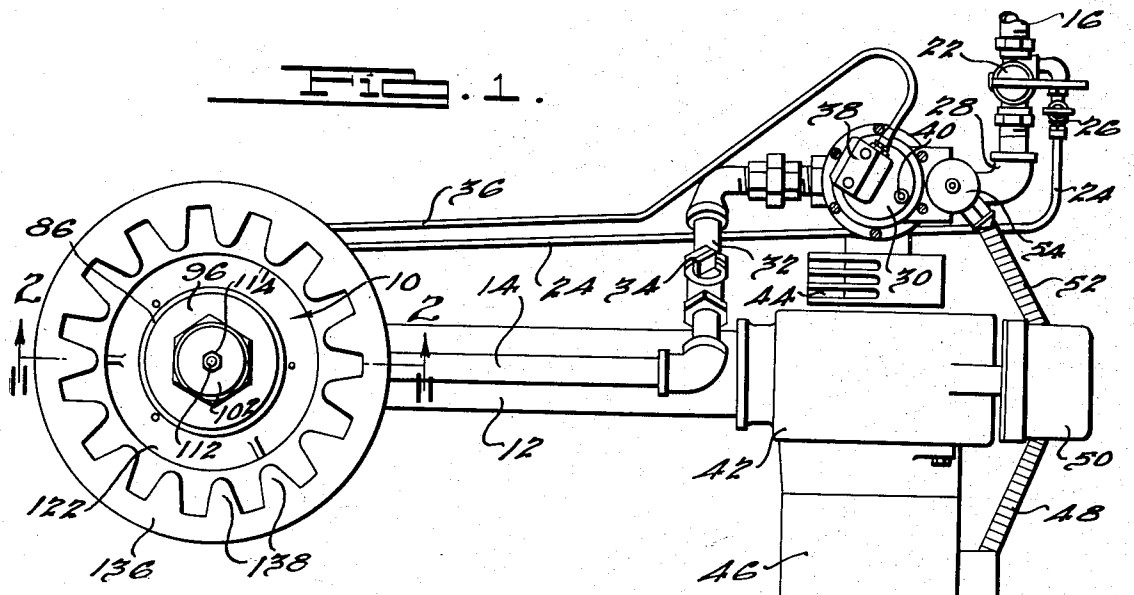

Fig. 2.

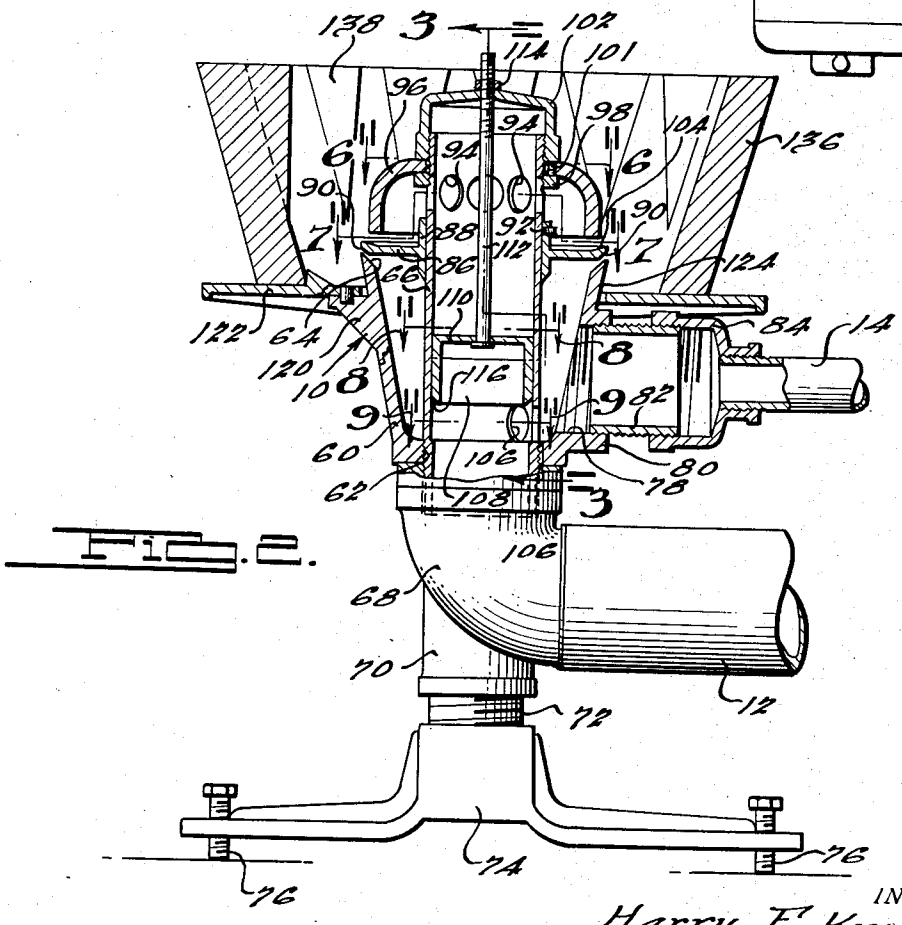

INVENTOR
Harry E. Knupp.
BY
Harness, Dickey & Pierce.
ATTORNEYS.

Nov. 5, 1940. H. E. KNUPP 2,220,572

GAS BURNER

Filed Feb. 2, 1940 2 Sheets-Sheet 2

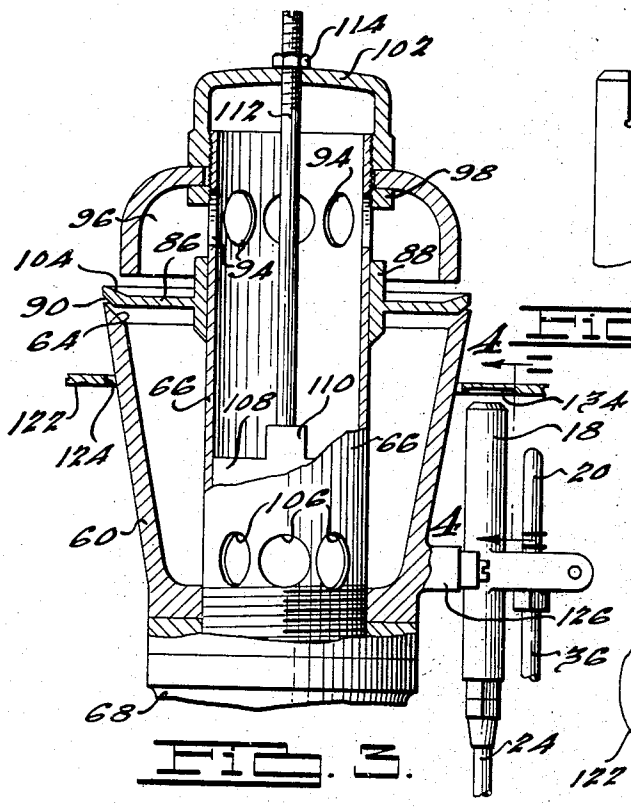

FIG. 3.

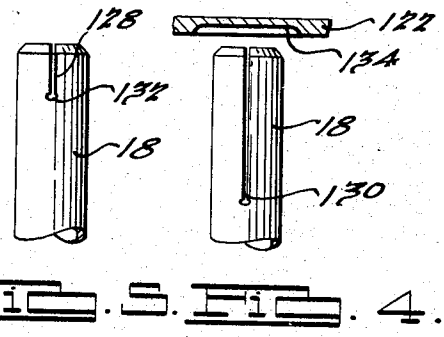

FIG. 5. FIG. 4.

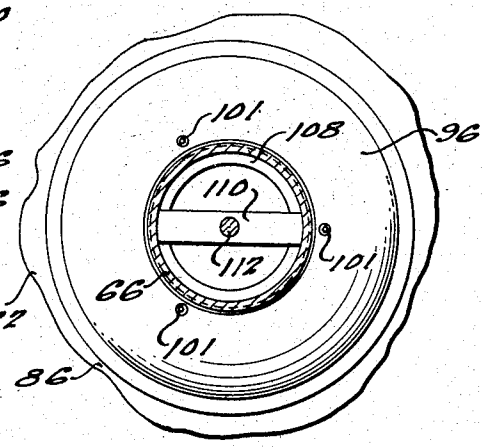

FIG. 6.

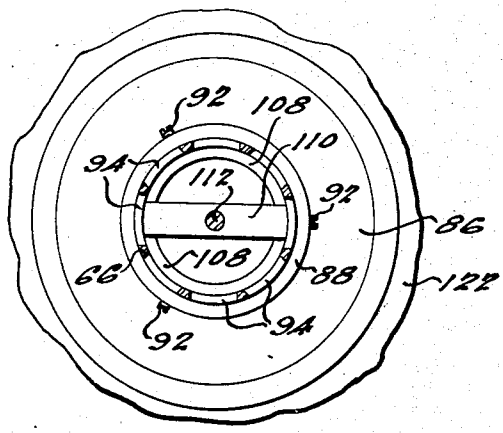

FIG. 7.

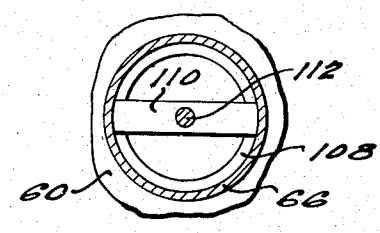

FIG. 8.

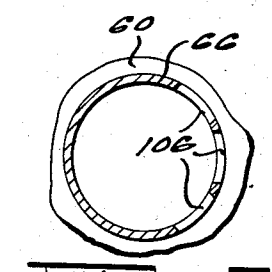

FIG. 9.

INVENTOR
Harry E. Knupp.
BY
Harness, Dickey & Pierce.
ATTORNEYS.

Patented Nov. 5, 1940

2,220,572

UNITED STATES PATENT OFFICE

2,220,572

GAS BURNER

Harry E. Knupp, Detroit, Mich.

Application February 2, 1940, Serial No. 316,866

5 Claims. (Cl. 158—99)

This present invention relates to improvements in gas burner constructions and particularly constructions adapted for use in household furnaces.

One of the primary objects of the present invention is to provide a novel and improved arrangement of gas burner elements, whereby the burner may be economically constructed, readily assembled, and operates in a highly efficient manner.

A further object of the invention is the provision of an improved arrangement of the gas and air chambers with controlled communication therebetween in order to effect efficient operation under various conditions.

A further object of the invention is the provision of a novel communication between the gas and air chambers, particularly with respect to the location of the air inlets into the air chamber, so that proper portions of the air are introduced into the gas chamber for mixture with the gas therein.

Another object of the invention is to protect the pilot flame in a novel and improved manner in which the protecting means also serves to support the radiation bowl, thereby simplifying the construction.

Other objects of the invention will become apparent from the following specification, the drawings relating thereto, and from the claims hereinafter set forth.

In the drawings, in which like numerals are used to designate like parts throughout:

Figure 1 is a top plan view of a burner construction according to the present invention illustrating its association with the automatic control means therefor;

Fig. 2 is an enlarged vertical cross-sectional view, with parts in elevation, taken substantially along the line 2—2 of Fig. 1;

Fig. 3 is an enlarged, fragmentary cross-sectional view, with parts in elevation, taken substantially along the line 3—3 of Fig. 2;

Fig. 4 is a side elevational view of the pilot burner taken substantially along the line 4—4 of Fig. 3;

Fig. 5 is a view similar to Fig. 4 viewing the opposite side of the burner;

Fig. 6 is an enlarged cross-sectional view taken substantially along the line 6—6 of Fig. 2;

Fig. 7 is an enlarged cross-sectional view taken substantially along the line 7—7 of Fig. 2;

Fig. 8 is an enlarged cross-sectional view taken substantially along the line 8—8 of Fig. 2; and

Fig. 9 is an enlarged cross-sectional view taken substantially along the line 9—9 of Fig. 2.

Referring to the drawings, in which an illustrative embodiment of the invention is described in detail, a burner, according to the present invention, is generally indicated at 10 having a substantially horizontal air supply conduit 12 and an overlying gas supply conduit 14 associated therewith. The gas supply conduit 14 is adapted to convey a combustible gas such as natural gas or manufactured gas therethrough which is supplied from the usual source through a supply pipe 16. A pilot burner 18 and a thermo-couple 20 (Fig. 3) are associated with the burner.

The gas supply pipe 16 communicates with a main control valve 22 and the pilot 18 is placed in communication with gas supply pipe 16 through a conduit 24 have a control valve 26 associated therewith on the inlet side of valve 22. The valve 22 communicates through conduit means 28 with a combination valve and regulator 30, of conventional construction, which in turn communicates with the gas inlet conduit 14 through pipe connections 32 having a shut-off valve 34 associated therewith. The thermo-couple 20 has a lead 36 associated therewith which is connected to an electro-magnet control mechanism 38 in the usual way. Such mechanism 38 has a valve associated therewith so that when the pilot flame is burning the difference in temperature between the tip of the thermo-couple (hot junction) installed in the pilot flame and the cold junction, generates sufficient current to energize an electro-magnet which holds open a valve in the combination valve and regulator 30. In case of pilot failure, this current is no longer generated and the valve closes, thereby shutting off the supply of gas to the burner through conduit 14. The valve may be manually reset by means indicated at 40.

The air supply conduit 12 is associated with the outlet end of a blower housing 42, which has a squirrel cage blower mounted therein in the usual way. The inlet to the blower and to the blower housing 42 is indicated at 44; and a motor 46 is mounted onto the housing 42 and is operatively connected to the blower in the usual way. The blower 46 is connected through leads 48 to an automatic switch 50, which is actuated by automatic temperature cantrol means in the usual way. Another lead 52 is also connected to the switch 50, and is connected to a magnetic gas valve 54 which is associated with the gas inlet pipes on the inlet side of valve 30. The magnetic valve 54 is operated through the temperature control system through switch 50, so that the supply of gas is automatically controlled according to the demands set by the temperature control system.

The various control mechanisms so far described form no part of the present invention per se, as they are conventional elements purchased on the open market. The present invention is primarily directed to the construction of the burner 10 in its association with other of the

elements as will be pointed out in detail hereinafter in the specification and claims.

The burner 10 comprises an upstanding cup-shaped housing 60 provided with a tapped opening 62 through the bottom thereof. The top of the housing 60 opens upwardly and is provided with a beveled inner top edge 64. An upstanding tubular member 66 extends upwardly through the housing 60 centrally thereof having the lower end threadably received with the tapped opening 62 and extending therebelow. The member 66 forms an air chamber which is placed in communication with the air supply conduit 12 through an elbow 68.

The elbow 68 is preferably formed with an integral depending connection portion 70, which is adjustably mounted through a threaded member 72 to a standard 74 for supporting the burner 10. The standard 74 has outstanding legs, depending screws 76 being threadably received therethrough so that the standard may be leveled when it is set upon its supporting surface.

The housing 60 is also provided with a gas inlet opening 78 through the wall thereof, and adjacent the lower end thereof, which has an integral annular projection 80 formed therearound. The projection 80 is internally tapped for the reception of a threaded connector pipe 82, which, in turn, threadably receives thereon a fitting 84. The fitting 84 threadably receives the adjacent end of the gas supply pipe 14, so that the combustible gas is supplied to the housing 60. The gas chamber is formed in the space between the member 68 and the housing 60, so that the gas chamber is in surrounding relation to the air chamber formed by member 66.

In order to form adjacent and superimposed air and gas outlet ports for the burner, a plate-like member 86, having a central hub portion 88, is mounted in embracing relationship to the member 66. The peripheral edge of member 86 is complementary in shape to the upper edge of housing 60, and is provided with a tapered under-edge 90 on an angle substantially the same as the angle of the tapered edge 64. The gas outlet port is formed by spacing the tapered edges 64 and 90 with respect to each other by adjustably fixing the hub portion 88 on member 66 by means of set screws 92, which are threadably received through the hub portion 88 and may be turned against the member 66.

The air conduit member 66 is provided with a plurality of outlet openings 94 through the wall thereof adjacent the upper end thereof at spaced intervals therearound. The air passes outwardly through such openings into another air chamber formed by an inverted dish-shaped member 96, which overlies the plate member 86. The member 96 is mounted on member 66, and is adjustable with respect thereto and with respect to the member 86. In order to so mount the member 96, the upper end of member 66, above openings 94, is externally threaded and threadably receives thereon a supporting ring 98. The member 96 is provided with a central opening therethrough which is slightly larger than the external diameter of member 66, so that it may slip thereover and rest upon ring member 98. In order that the member 96 may be leveled so that the lower edge thereof is level with respect to the member 86, set screws 101, having Allen heads, are received through tappet openings in member 96 above ring 98 at spaced intervals therearound, so that by turning such screws 101 they will engage ring member 98 and tilt member 96 so that it may be properly leveled.

A cap member 102 is threadably received over the upper end of the member 66, and it engages the top surface of member 96 to fix it with respect to conduit member 66.

The upper outer edge of member 86 is upwardly and outwardly tapered, as indicated at 104, and such taper is preferably at a lesser angle than the angle of the tapers 64 and 90, so that an air discharge port is formed between the tapered portion 104 and the lower edge of member 96. These angles are such that the gas and air are projected away from the ports a proper distance before they are mixed in the combustible flame.

It may be considered that the air chamber is that formed by the interior of member 66 and member 96, since they are in communication through openings 94, so that the gas and air discharge ports lie in adjacent and superimposed relationship with respect to each other.

When using natural gas, for efficient operation it is desirable to mix portions of air with the gas within the gas chamber formed within housing 60. This is accomplished by providing openings 106 through the wall of member 66 adjacent the lower end of housing 60, so that the air chamber is placed in communication with the gas chamber through such openings.

Viewing Fig. 2, it will be seen that the relationship of the air supply conduit 12 with the conduit 66 through elbow 68 is such that the air sweeps against the long radius of the elbow 68 in its passage into conduit 66. For proper mixture of the air with the gas, it has been found that best results are obtained by providing the openings 106 through that portion only of the wall of member 66 adjacent the small radius of the elbow. In this way, as the air sweeps into conduit 66 from the elbow, a proper mixture of air within the gas chamber is obtained.

In order to control the passage of air into the gas chamber through openings 106, an adjustable control valve is provided which is in the form of a ring-shaped member 108 slidably disposed against the inner surface of member 66. The ring-shaped member 108 has an integral U-shaped bridge element 110 which has an upstanding rod 112 associated therewith. The rod 112 extends upwardly through the member 66 and through a tapped opening in cap member 102. The upper end of the rod is threaded and threadably receives thereon a lock nut 114 which rests upon cap 102, so that by turning the rod the valve sleeve 108 is caused to slide upwardly or downwardly within member 66 and may be locked in position by the nut 114. The outer lower edge of member 108 is tapered outwardly, as indicated at 116, so that as the air passes through member 66 a sufficient portion of the air is deflected outwardly for passage through openings 106. By adjusting the valve 108 with respect to openings 106, it would be evident that the amount of air passed through such openings may be controlled. The valve may be so positioned that the openings are entirely open or completely closed, or it may assume intermediate positions.

When using manufactured gas, it is not necessary to mix air with the combustible gas within the gas chamber, so that under such conditions the valve 108 could be positioned so that the openings 106 were completely closed.

The housing 60 is provided with a plurality of integral, spaced projections 120 therearound, and spaced below the upper edge of such housing,

which form supports for a baffle and supporting plate member 122. The member 122 is provided with a central opening 124 therethrough, which is of such a diameter that the member 122 may be slipped over the upper end of housing 60 and so that when the member 122 is supported by and upon projections 120 the edge of opening 124 is spaced from the outer surface of housing 60.

Viewing Fig. 3, it will thus be seen that the member 122 is positioned slightly above the upper tip of pilot burner 18, which may be mounted by suitable brackets 126 to housing 60. The pilot burner 18 is provided with gas outlet ports in the form of a slit 128 which extends across the top of the burner and which extends down one side of the burner a greater distance than the other, as indicated at 130 and 132, respectively. The long slot 130 faces the thermo-couple 20, so that the pilot flame projects against the thermo-couple 20. The flame also burns through the top of the slot 128 against the under-surface of baffle 122 and through the side slot 132, so that the pilot flame projects through the space between opening 124 and the housing upwardly across the gas and air discharge ports. The baffle member 122 is recessed slightly, as indicated at 134 immediately above the tip of burner 18, so that the operation of such burner will not be effected in the event that there is a slight carbon build-up at this point. The member 122 thereby serves as a baffle to protect the pilot flame so that it will not be blown out by the air and gas issuing from the air and gas discharge ports located thereabove.

The member 122 also serves as a support for a refractory radiation bowl 136. The refractory bowl 136 is of conventional construction, having integral radiation ribs 138 formed thereon so that the heat from the burner flame is efficiently utilized for its heating purpose.

While in the specific embodiment of the invention described above, the housing 60, the conduit member 66 and their associated elements are illustrated as being circular in cross section, it will be evident that such elements could be made square, rectangular, or other shapes, within the scope of the present invention. Other elements, such as the members 86, 96, 122 and 136, would be given corresponding complementary shapes, as will be apparent to those skilled in the art.

Formal changes may be made in the specific embodiment of the invention described without departing from the spirit and substance of the invention, the scope of which is commensurate with the appended claims.

What is claimed is:

1. A gas burner construction comprising means forming an air chamber, an air supply conduit communicating with said air chamber, means forming a gas chamber embracing said air chamber, a gas supply conduit communicating with said gas chamber, an opening communicating said air chamber with said gas chamber for the supply of air thereto, valve means controlling the flow of air through said opening, and means providing adjacent discharge ports from said air and gas charmbers.

2. A gas burner construction comprising a housing, an air conduit extending centrally through said housing, said housing and said conduit providing a gas chamber therebetween, means communicating one end of said conduit with a source of air, means communicating said gas chamber with a source of gas, an opening communicating said air conduit with said gas chamber, adjustable valve means controlling the flow of air into said gas chamber through said opening, and means providing adjacent discharge ports from said air and gas chambers.

3. A gas burner construction comprising an upstanding housing, an upstanding air conduit extending centrally through said housing, said housing and said conduit providing a gas chamber therebetween, means forming an air supply conduit, an elbow member connecting said last-named means with the lower end of said first-named air conduit, means communicating said gas chamber with a source of gas, an opening in the wall of said first-named air conduit located on that side of said first-named air conduit adjacent the inner turn of said elbow communicating said first-named air conduit with said gas chamber, adjustable valve means controlling the flow of air through said opening into said gas chamber, and means providing adjacent discharge ports from said air and gas chambers.

4. gas burner construction comprising an upstanding housing, an upstanding air conduit extending centrally through said housing, said housing and said conduit providing a gas chamber therebetween, means communicating one end of said conduit with a source of air, means communicating said gas chamber with a source of gas, an opening formed through the wall of said air conduit adjacent the lower end of said gas chamber communicating said air conduit with said gas chamber, a sleeve member slidably engaging the inner wall of said air conduit, the lower edge of said sleeve being tapered upwardly and outwardly, means adjustably positioning said sleeve with respect to said opening thereby controlling the flow of air through said opening into said gas chamber, and means providing adjacent discharge ports from said air and gas chambers.

5. A gas burner construction comprising an upwardly opening, upstanding housing, an upstanding air conduit extending centrally through said housing and extending above the upper edge thereof, said housing and said conduit providing a gas chamber therebetween, means communicating the lower end of said air conduit with a source of air, means communicating the lower end of said gas chamber with a source of gas, a plate-like member embracing said air conduit, the outer edge of said member terminating adjacent the upper edge of said housing in spaced relation thereto to form a gas discharge port, means adjustably mounting said plate-like member on said air conduit to vary said gas discharge port, an inverted, cup-shaped baffle member, means adjustably mounting said baffle member on said conduit above said plate member, the lower edge of said cup-shaped member terminating in spaced relation to the top surface of said plate-like member to form an air discharge port, an opening provided in said air conduit adjacent the top thereof communicating said air conduit with the space between said cup-shaped member and said plate-like member, a cap secured to the upper end of said conduit, an opening formed through the wall of said air conduit adjacent the lower end of said gas chamber communicating said air conduit with said gas chamber, a sleeve member slidably engaging the inner wall of said air conduit, and adjustable means extending through said cap and secured to said sleeve for adjustably positioning said sleeve with respect to said opening thereby controlling the flow of air through said opening into said gas chamber.

HARRY E. KNUPP.