J. G. FRANCE.

SASH LOCK.

APPLICATION FILED NOV. 27, 1912.

1,068,642.

Patented July 29, 1913.

FIG. 1.

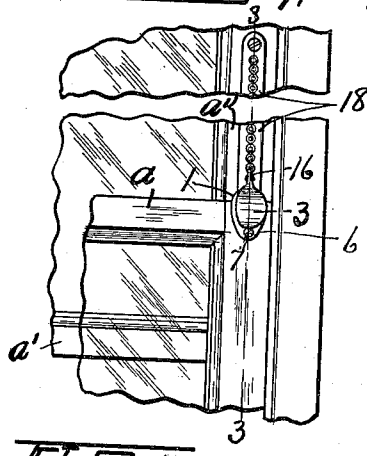

FIG. 3.

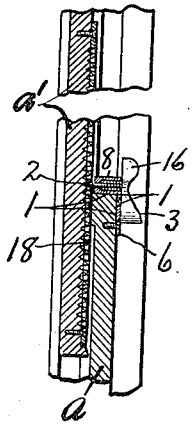

FIG. 2.

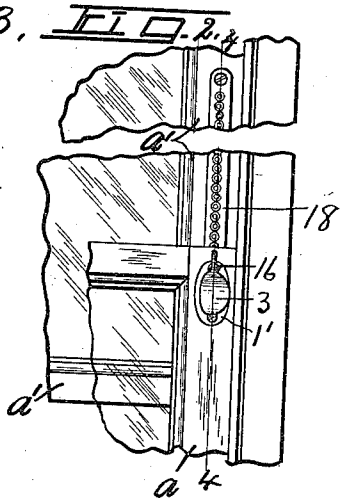

FIG. 4.

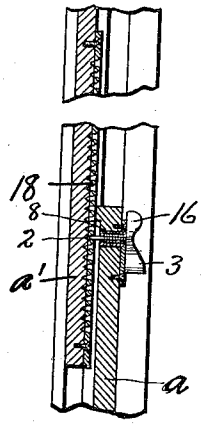

FIG. 5.

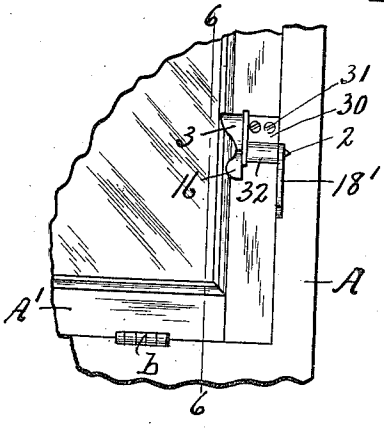

FIG. 6.

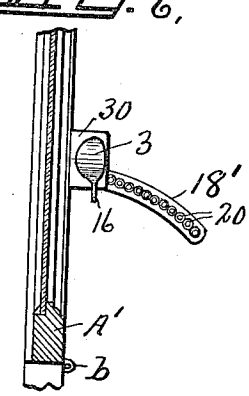

FIG. 7.

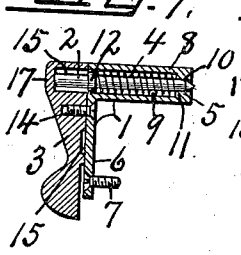

FIG. 8.

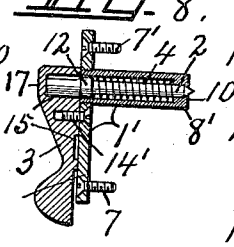

FIG. 9

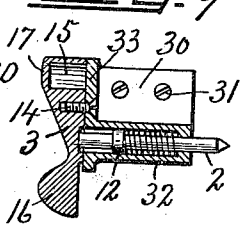

FIG. 10.

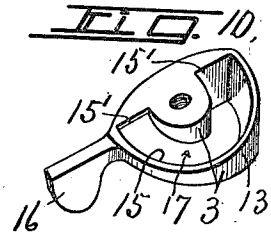

FIG. 11.

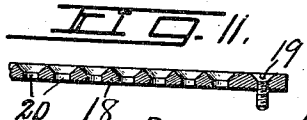

Witnesses

H. W. Hurst.

H. E. Chase

J. G. France
Inventor

By Howard P. Denison

Attorney.

UNITED STATES PATENT OFFICE.

JASON G. FRANCE, OF SYRACUSE, NEW YORK.

SASH-LOCK.

1,068,642. Specification of Letters Patent. Patented July 29, 1913.

Application filed November 27, 1912. Serial No. 733,908.

To all whom it may concern:

Be it known that I, JASON G. FRANCE, of Syracuse, in the county of Onondaga, in the State of New York, have invented new and useful Improvements in Sash-Locks, of which the following, taken in connection with the accompanying drawings, is a full, clear, and exact description.

This invention relates to certain improvements in sash locks for locking a sash in a more or less open or closed position either to another movable sash or to a portion of the window frame or adjacent fixture.

The main object is to provide a simple and comparatively inexpensive sash lock of the sliding bolt type which may be easily and quickly applied to any swinging or sliding sash for positively locking such sash in its closed position or in different degrees of adjustment to an open position.

One of the specific objects is to provide a smooth and sanitary bolt-operating member which may be used without alteration for operating the locking bolts of various forms of sliding or swinging sash.

Another object is to utilize this bolt-operating member for concealing the locking bolt in all positions of adjustment by providing said operating member with a substantially semi-circular groove concentric with its axis of rotation and having its base forming a cam face gradually inclining from end to end of the groove and facing the open side thereof for engaging and operating the locking bolt.

Other objects and uses relating to specific parts of the locking device will be brought out in the following description.

In the drawings—Figures 1 and 2 are face views of portions of double sliding sash windows showing slightly modified forms of my approved sash lock as applied respectively to the top and to the intermediate portion of one of the sides of the lower sash. Figs. 3 and 4 are vertical sectional views of the sash and sash locks shown in Figs. 1 and 2 taken respectively on lines 3—3 and 4—4 in said figures. Fig. 5 is a face view of a portion of a window showing a vertically swinging frame and slightly modified form of sash lock applied thereto. Fig. 6 is a vertical sectional view taken on line 6—6, Fig. 5. Figs. 7, 8 and 9 are enlarged detail sectional views of the sash locks shown respectively in Figs. 1, 2 and 5 omitting the keeper. Fig. 10 is an enlarged perspective view of the detached bolt-operating member. Fig. 11 is a detail sectional view of a portion of one of the apertured keepers.

The sash lock shown in Figs. 1 and 2 comprises an angular bracket —1—, locking bolt —2—, and an operating member —3— together with a retracting spring —4— for the locking bolt.

The bracket —1— is preferably made of cast metal and consists of an upper horizontal plate —5— and a vertical plate —6— integral therewith and disposed at right angles thereto, the upper plate —5— being of substantially the same transverse width as the top of the lower sash as —*a*— to which it is adapted to be secured by screws or equivalent fastening means while the vertical plate —6— is adapted to be secured to the front face of the same sash by similar fastening means as screws —7—. The upper plate —5— is provided with a tubular boss —8— having a lengthwise socket —9— for receiving the coil spring —4—, the inner end of the socket being reduced in diameter to form a guide opening —10— for the inner end of the locking bolt —2— and also to form a shoulder or abutment —11— for the inner end of the coil spring —4—. The outer end of the coil spring bears against the annular shoulder —12— on the intermediate portion of the locking bolt —2— for normally retracting or withdrawing said bolt from its operative position when released by proper movement of the operating member —3—. The bolt-operating member consists of a hollow substantially semi-circular body —13— of cast metal pivotally secured at its axis by a pivotal bolt —14— to the vertical plate —6— of the bracket —1— and provided with a concentric groove —15— and a radially projecting finger piece —16—. The groove —15— is substantially semi-circular and concentric with the pivot —14— but gradually increases in depth from end to end, the inner side facing the plate —6— being opened while the outer side is closed and forms a cam bearing —17— against which the outer end of the locking bolt —2— is spring pressed by the coil spring —4—. The inner face of the operating member —3— is substantially flat and is loosely held with an easy radial fit against the adjacent end of the plate —6— and, therefore, the cam bearing —17— gradually inclines from end to end owing to the fact that the depth of the groove

gradually increases from end to end as previously stated. The side walls and base of the groove or recess constituting a housing for the outer end of the bolt to effectively conceal the same and exclude dust from the interior of the barrel —8—, the outer face of the operating member —3— being smooth throughout its area and sides so that it may be easily polished and kept in a thoroughly sanitary condition. The inner end of the locking bolt is preferably tapered or pointed and adapted to coöperate with a suitable apertured keeper —18— on the other sash to lock the sash to each other either in a closed position or in partially opened positions.

The keeper —18— preferably consists of a flat bar of metal having its ends secured by screws —19— to the upper sliding sash as —*a'*— and its intermediate portion provided with a series of apertures —20—, the front ends of which are flaring and arranged in sufficiently close proximity to each other so that their adjacent sides meet as shown more clearly in Fig. 11. That is the bolt holes are sufficiently close to each other so that their front ends are counter-sunk and their adjacent edges meet, thereby bringing the front edges of the intervening partitions to a comparatively sharp knife edge and causing the inner end of the locking bolt to more readily enter in one of the apertures without liability of resistance by the outer face of the intervening partitions.

It is apparent from the foregoing description that the bracket —1— may be applied to the sash without boring any holes therethrough but in Figs. 2, 4 and 8, I have shown a slightly modified form of bracket —1'— as provided intermediate at its ends with a tubular barrel —4'— adapted to be passed through a correspondingly sized bore or opening in the shell —*a*—, the bracket —1— being also provided with a front flat plate —6'— adapted to be secured by suitable fastening means as —7'— to the front face of one of the side rolls of the sash as shown more clearly in Figs. 2 and 4, it being understood that the length of the barrel —4'— is substantially equal to the thickness of the sash through which it is inserted so that the inner face of the barrel is practically coincident with the corresponding face of the sash, otherwise the locking bolt and its operating means and apertured keeper is substantially the same as that shown in Figs. 1 and 3.

In Figs. 5 and 6, I have shown a swinging sash —A'— as hinged at its lower end to a window frame —A— and equipped with a slightly modified form of my sash lock consisting in this instance of a bracket —30— which is secured to the front face of the sash —A'— by suitable fastening means, as screws —31— and is provided with a tubular barrel —32— similar to the barrels —8— and —8'—, the bracket —30— is also provided at its inner end with an outwardly projecting substantially flat plate —33— to which the operating member as —3— is pivoted in a manner similar to that shown in Figs. 7 and 8. In this instance, the keeper, as —18'— is secured at its inner end to the window frame and projects forwardly therefrom concentric with the axis of the hinge, as —*b*—, but the bolt openings therein are substantially the same as that described for the bar —18— except that they are also concentric with the axis of the hinge and in line with the path of movement of the locking bolt and its operating means are substantially the same as that previously described. It will be observed, however, that the ends of the groove —15— of the operating member are also closed by walls —15'— which constitute limiting stops cooperating with the outer end of the locking bolt for limiting the degree of rotary movement of the operating member to substantially a half turn, said shoulders being nearly in diametrical alinement with the finger piece —16— so as to cause said finger piece to assume a position above or below the axis of movement of the operating member when the bolt is in one or the other of its extreme positions either locked or unlocked.

The operation of the locking device is extremely simple, as for example, when the low point of the cam bearing —17— is registered with the locking bolt, the latter is withdrawn from its locking position by the spring —4— and when the high point of said cam is registered with the outer end of the bolt, the latter is forced to its locking position against the action of said spring, the finger piece —16— serving as a convenient means for turning the operating member —3— from one to the other of its extreme positions and inasmuch as the degree of inclination of the cam is considerably less than 30°, it is evident that the bolt will be effectively locked in any of its adjusted positions and that the limiting stops —15'— will coöperate with the outer end of the locking bolt to prevent the finger piece from being brought too closely to the adjacent side of the window frame.

When this sash lock is employed to lock two sliding sash together, it is evident that either one of the sash may be opened to the desired or safe degree and effectively locked in this position so that neither sash can be opened to a greater extent, thereby protecting the occupants of the building of which the window forms a part at night when it is desired to open the windows slightly for ventilation.

What I claim is:

1. A sash lock comprising a bracket hav-

ing a tubular barrel reduced at its inner end to form a guide opening for the corresponding end of the locking bolt, a sliding locking bolt guided within the barrel and provided intermediate at its ends with an annular shoulder, a coil spring within the barrel surrounding the locking bolt between said annular shoulder and reduced end of the barrel for withdrawing the locking bolt from its locking position, a bolt-operating member pivoted to said bracket at one side of the barrel and bolt and provided with a groove concentric with its pivot for receiving the outer end of the bolt, said groove gradually increasing in depth from end to end and having its outer end closed by a cam bearing forming a part of the operating member and adapted to engage the outer end of the locking bolt for forcing the latter to its locking position when the operating member is operated in one direction and a keeper having a series of apertures for receiving the inner end of the locking bolt.

2. In combination with a movable sash and a relatively fixed keeper having a series of tapering apertures arranged side by side and having adjacent sides of their outer ends merging to form intervening knife edge partitions, a bracket secured to the sash and provided with a socket having a reduced end forming a guide opening for a locking bolt, a locking bolt slidable in the socket and guide opening and having a tapered inner end, said locking bolt having its intermediate portion provided with an annular shoulder, a coil spring interposed between said shoulder and reduced end of the socket and an operating member for the locking bolt pivoted to the bracket at one side of the bolt and provided with an annular groove concentric with the pivot and gradually increasing in depth from one end to its opposite end, said groove registering with the outer end of the bolt and having its outer side closed to form a cam for said bolt.

3. In combination with a movable sash and a relatively fixed keeper having a series of apertures arranged side by side in the direction of movement of the sash, a bracket secured to the sash and provided with a barrel for a locking bolt, a locking bolt slidable within the barrel and adapted to interlock with the apertures of the keeper, a spring for retracting the locking bolt and an operating member for forcing the locking bolt to its locking position, said locking member being pivoted to the bracket at one side of the bolt and provided with a cam face concentric with the pivot and registering with the outer end of the bolt and inclined from end to end at an angle with the axis of said bolt.

In witness whereof I have hereunto set my hand this 22nd day of November, 1912.

JASON G. FRANCE.

Witnesses:
H. E. CHASE,
EVA E. GREENLEAF.

Copies of this patent may be obtained for five cents each, by addressing the "Commissioner of Patents, Washington, D. C."