United States Patent [19]

Avery et al.

[11] B **3,924,789**

[45] **Dec. 9, 1975**

[54] **ELECTRIC FASTENER DRIVING TOOL**

[75] Inventors: **Hazelton H. Avery**, Aurora; **Salvatore Morabito**, Northlake, both of Ill.

[73] Assignee: **Duo-Fast Corporation**, Franklin Park, Ill.

[22] Filed: **June 7, 1973**

[21] Appl. No.: **367,812**

[44] Published under the Trial Voluntary Protest Program on January 28, 1975 as document no. B 367,812.

[52] **U.S. Cl.** **227/131**; 227/132

[51] **Int. Cl.**[2] **B25C 1/06**

[58] **Field of Search** 227/131, 132

[56] **References Cited**

UNITED STATES PATENTS

3,434,026	3/1969	Doyle	227/131 X
3,552,627	1/1971	Moreno	227/131 X
3,589,588	6/1971	Vasku	227/132

Primary Examiner—Granville Y. Custer, Jr.
Attorney, Agent, or Firm—Mason, Kolehmainen, Rathburn & Wyss

[57] **ABSTRACT**

An electric fastener driving tool designed for use with an undulating or alternating current input potential includes a housing with a chamber above a nosepiece structure defining a drive track. A pair of coaxial windings in the chamber slidably receive a magnetic armature connected to a driver blade slidable in the drive track. A plurality of compression springs are interposed between the housing and a plate which rests on a shoulder on the armature and is disposed in a space between the windings. A trigger actuated control circuit energizes the upper winding to retract the armature and compress the springs on the first complete half cycle of properly poled potential occurring after the trigger operation. At the end of this half cycle, the compressed springs drive the armature and driver blade downwardly toward a fastener in the drive track. The control circuit energizes the lower winding on the next following half cycle of input potential to accelerate the downward movement of the fastener driving assembly so that the power available for driving a fastener includes the energy obtained from the compressed springs as well as that obtained from the energization of the lower winding.

11 Claims, 3 Drawing Figures

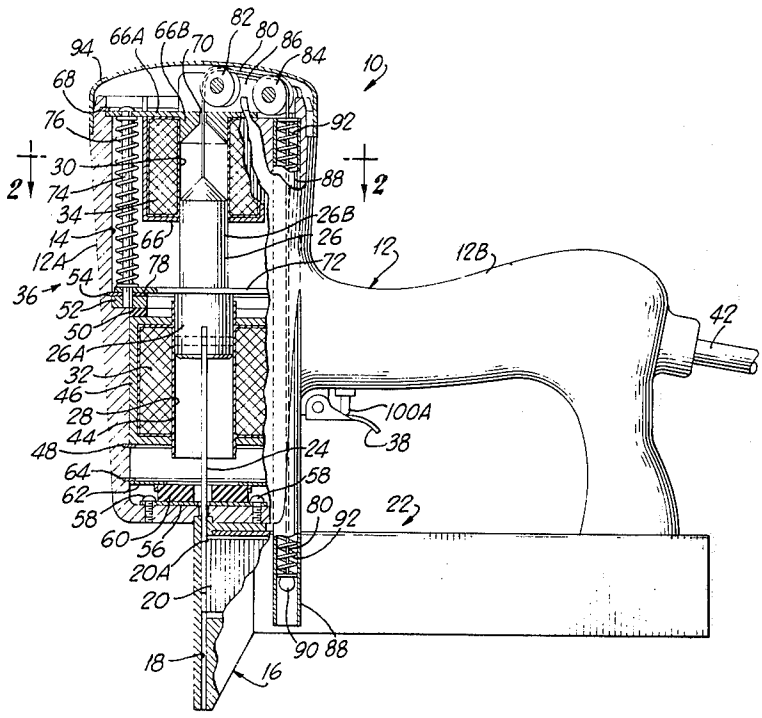

Fig. 1

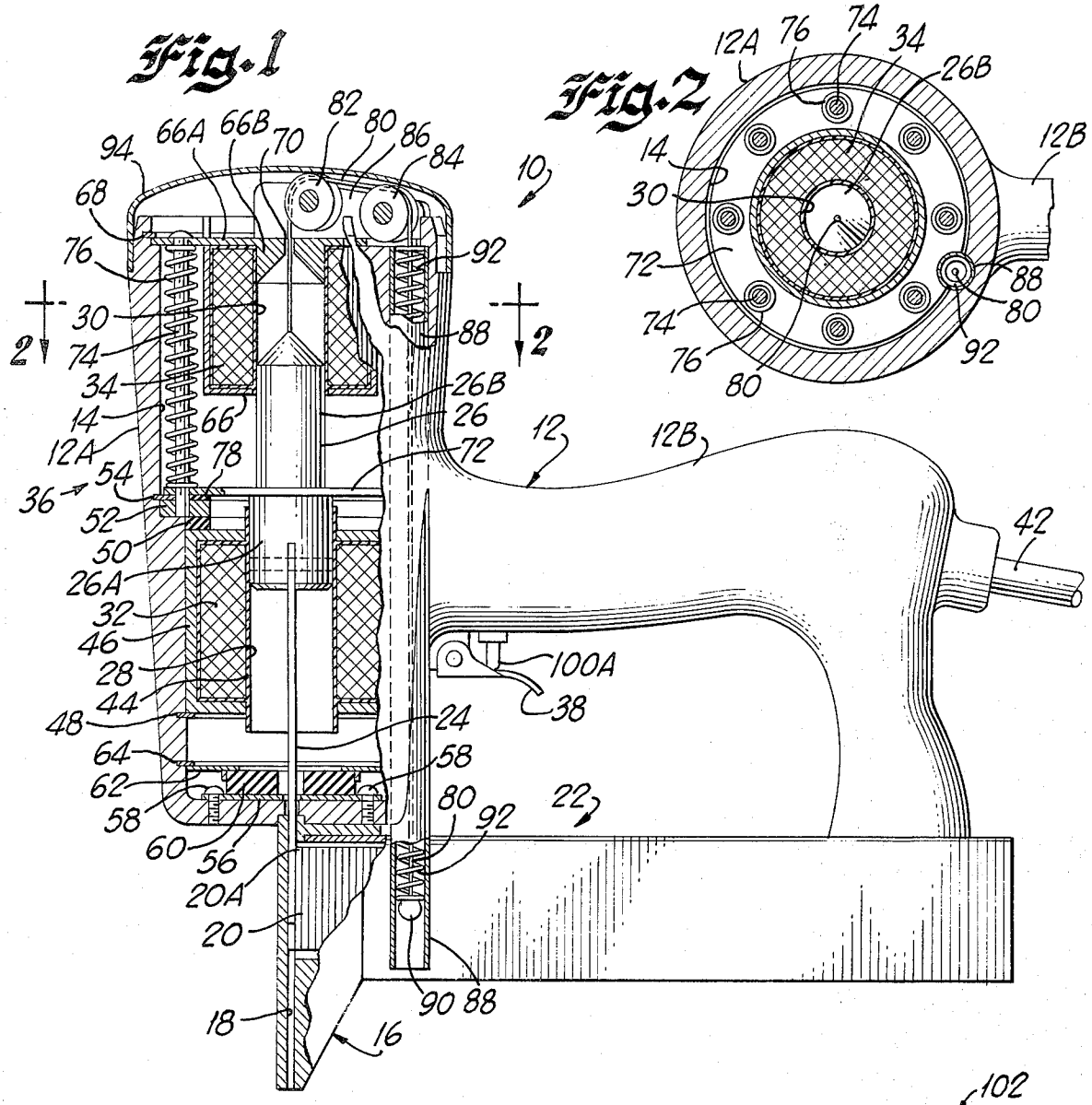

Fig. 2

Fig. 3

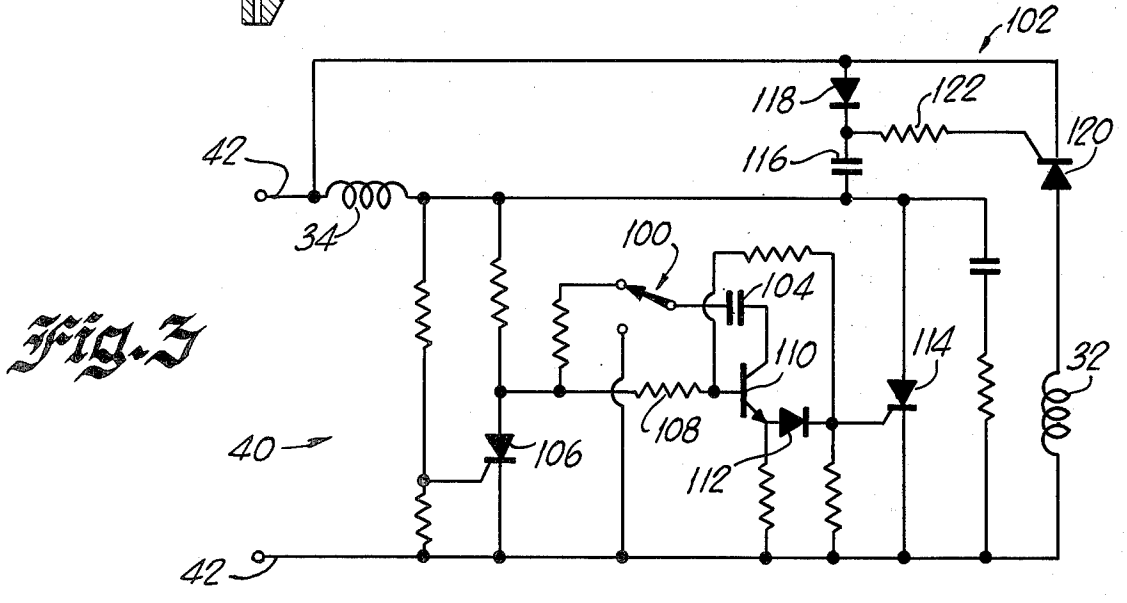

ELECTRIC FASTENER DRIVING TOOL

This invention relates to an electric fastener driving tool and, more particularly, to a new and improved electric fastener driving tool having increased driving power.

Electric tackers or staplers have been used for a number of years, and a type used successfully in industrial applications is one shown and described in U.S. Pat. No. 3,179,866. In this type of tool, a control circuit trigger actuated at random times relative to the alternating current input potential connects a winding across the input potential for a complete half cycle so that a magnetic armature-driver blade assembly sets the fastener in a single stroke of uniform power. U.S. Pat. No. 3,209,180 discloses a similar tool in which part of the energy from an armature return stroke is resiliently stored for use in the next power stroke. U.S. Pat. No. 3,434,026 discloses a similar tool using an elongated armature and two vertically arranged windings energized on successive half cycles for increasing the energy of the power stroke. However, the energy that can be imparted to the driver blade with these arrangements is, in some applications, inadequate for driving certain types of large fasteners into harder or thicker material.

Accordingly, one subject of the present invention is to provide a new and improved electric fastener driving tool.

Another object is to provide an electric fastener driving tool deriving energy from more than a single half cycle of input potential by using a resilient energy storage means.

A further object is to provide an electric fastener driving tool using two windings, one of which is energized on one half cycle to compress a resilient armature-blade driving means and a second of which is energized on the subsequent half cycle of the input potential to accelerate the resiliently driven armature-blade assembly.

In accordance with these and many other objects, an embodiment of the invention comprises an electric stapler or fastener driving tool designed for use with alternating current potential. The stapler includes a housing having a vertical head portion defining a chamber having secured to its lower end a nosepiece structure defining a drive track to which successive fasteners or staples are supplied by a magazine assembly connected between the nosepiece structure and the lower end of a handle portion of the housing. A pair of vertically spaced windings are disposed within the chamber so that openings therein are axially aligned to receive a magnetic armature, to the lower end of which is connected a driver blade slidable within the drive track. A plate rests on a shoulder formed on the armature in a position disposed between the vertically spaced windings, and this blade is normally held in engagement with an annular stop by a plurality of compression springs interposed between the housing and the plate and peripherally spaced around the upper winding. A return spring is connected to the upper end of the armature to hold the shoulder in engagement with the coupling plate.

A control circuit mounted within the hollow handle is connected to the two windings and is controlled by a trigger or manually actuated switch which is operable at random times relative to the alternating current input potential. When the trigger is actuated, the control circuit energizes the upper winding during the first complete properly poled half cycle of the input potential. When the upper winding is energized, the armature is moved upwardly into the opening in the upper winding and carries with it the coupling plate so that the compression springs are stressed or compressed. During this movement, the driver blade moves upwardly within the drive track to clear the crown of the adjacent staple so that this staple can be fed into the drive track beneath the driver blade. At the end of the first half cycle of the alternating current input potential, the upper winding is no longer energized, and the compression springs operating through the coupling plate drive the armature and connected driver blade downwardly. Coincident with the termination of the energization of the upper winding, the lower winding is energized so that its flux field is coupled to the magnetic armature and drives the armature and driver blade downwardly so that the fastener engaged by the driver blade is driven into a workpiece. In this manner, the energy of the first half cycle of the input potential is used to store energy in the plurality of compression springs, and this energy is added to the energy of the second or next following half cycle which is effective through the lower winding to directly propel the magnetic armature downwardly through its power stroke.

Many other objects and advantages of the present invention will become apparent from considering the following detailed description in conjunction with the drawings in which:

FIG. 1 is a side elevational view in partial section illustrating an electric stapler embodying the present invention;

FIG. 2 is a sectional view taken along line 2—2 in FIG. 1; and

FIG. 3 is a schematic circuit diagram of a power control circuit used with the electric stapler shown in FIG. 1.

Referring now more specifically to FIG. 1 of the drawings, therein is illustrated an electric fastener driving tool or stapler which is indicated generally as **10** and which embodies the present invention. The stapler **10** includes a housing indicated generally as **12** including a vertical head portion **12A** defining a chamber **14** and a rearwardly extending hollow handle portion **12B.** A nosepiece structure indicated generally as **16** is secured to the lower end of the head portion **12A** and defines a drive track **18** to which staples **20** or other suitable fasteners are successively supplied by a magazine assembly indicated generally as **22.** The staples **20** are driven by a flat driver blade **24,** the lower end of which is slidable within the drive track **18** and the upper end of which is connected to the lower end of a magnetic armature **26.** The armature **26** is movable within aligned openings **28** and **30** in a pair of windings **32** and **34,** respectively, which are mounted within the chamber **14.** A resilient biasing assembly indicated generally as **36** is disposed in the space between the windings **32** and **34.**

When the tool **10** is to be operated, a trigger **38** pivotally mounted on the housing **12** operates a control circuit **40** (FIG. 3) mounted within the hollow handle **12B** and supplied with an alternating current input potential through a conventional line cord **42** (FIG. 1) to energize the winding **34** on the first complete half cycle following the operation of the trigger **38.** Energization of the winding **34** retracts the armature **26** into the coil **34**

and stresses the resilient biasing assembly **36** as well as retracts the lower end of the driver blade **24** so that it clears a crown portion **20A** of the staple **20** in the magazine assembly **22** next adjacent the drive track **18.** This permits this staple **20** to be moved into the drive track **18** below the lower end of the driver blade **24.**

At the end of the first half cycle, the control circuit **40** terminates the energization of the winding **34** and permits the resilient biasing assembly **36** to move the armature **26** and the connected driver blade **24** downwardly to engage the staple **20** previously supplied to the drive track **18.** On the next following half cycle, the control circuit **40** energizes the winding **32** which is coupled with the moving armature **26,** and the flux field of the winding **32** adds further kinetic energy to the armature **26** which is imparted to the staple **20** in the drive track through the driver blade **24.** At the end of this half cycle, the control circuit **40** terminates the energization of the winding **32** and disables any further energization of the windings **32** and **34** until such time as the trigger **38** is released and reoperated.

Referring now more specifically to the armature **26,** this armature is formed with a lower portion **26A** of greater diameter and an upper portion **26B** of lesser diameter terminating in a generally conical upper end surface. The upper end of the driver blade **24** is secured as by a drive pin to the large diameter portion **26A** of the armature **26.** This armature is formed of magnetic material. In the normal position of the tool **10,** the greater diameter portion **26A** is received within the opening **28** in the lower winding or coil **32** and, more specifically, within a nonmagnetic sleeve **44** which defines the cylindrical opening **28.**

The lower winding **32** is provided with a field or pole piece construction **46** of magnetically permeable material. The pole piece construction **46** is generally toroidal in configuration and is disposed within a lower portion of the chamber **14** resting on a circular retaining ring **48.** The coil **32** and the pole piece construction **46** are secured in the position shown in FIG. **1** by an annular ring **50** which is interposed between an upper surface of the pole piece construction **46** and the lower surface of a metal ring **52** which rests on a shoulder on the head portion **12A** and is secured in position thereon by another circular retaining ring **54.**

A slotted metal guide plate **56** is secured to the bottom wall of the head portion **12A** to provide means for guiding movement of the driver blade **24.** This plate is held in position by a plurality of conventional fasteners, such as machine screws **58.** Resting on the upper surface of the guide plate **56** is an annular resilient bumper **60** which cushions the termination of the downward power stroke of the armature **26.** This resilient bumper **60** is held in position by an annular retaining plate **62** secured in position by a circular retaining ring **64.**

The upper winding **34** is mounted within the chamber **14** spaced vertically above the lower winding **32** by a field or pole piece construction **66** having an upper plate **66A** whose outer periphery rests on a shoulder in the head portion **12A** and is secured thereon by a circular retaining ring **68.** The upper plate **66A** includes a depending portion **66B** terminating in a generally conical cavity through which an opening **70** extends. The depending portion **66B** limits the degree to which the armature **26** can be retracted into the opening **30** in the upper coil **34.**

The resilient biasing assembly **36** includes a one-way coupling to the armature **26** formed by an annular nonmagnetic plate **72** whose center opening receives the small diameter portion **26B** of the armature **26** so that the plate rests on the shoulder defined by the large diameter portion **26A** of the armature **26.** The outer periphery of the plate **72** contains a plurality of peripherally spaced openings in which are slidably received a number of guiding pins or posts **74.** The lower ends of the posts **74** are received within openings in the ring **52,** and the upper ends of these posts or pins **74** are received in openings in the top plate **66A** of the pole piece construction **66** for the upper winding **34.** A plurality of compression springs **76** encircling the posts **74** are interposed between the lower surface of the top wall **66A** and the upper surface of the plate **72.** These springs normally resiliently bias the lower surface of the plate **72** into engagement with an annular resilient bumper **78** resting on the upper surface of the ring **52.**

To provide means for returning the armature **26** and the connected driver blade **24** to their normal home position following each power stroke of the tool **10,** there is provided a flexible cable **80** secured at one end to the upper end of the armature **26.** This cable passes out of the top wall **66A** through the opening **70** and passes over a pair of pulleys **82** and **84** rotatably mounted between a pair of supports **86** projecting upwardly from the top wall **66A** of the pole piece construction **66.** The cable **80** then passes downwardly through an elongated tube **88.** The upper portion of this tube **88** is secured to the head portion **12A,** and the lower portion of this tube projects downwardly beyond the confines of the wall of the head portion **12A.** The lower free end of the flexible cable **80** is secured within an opening in a guide ball **90** located within the tube **88.** A compression spring **92** extends between the guide ball **90** and a retaining structure at the upper end of the tube **88.**

In the normal condition of the tool **10,** the compression spring **92** is slightly compressed and exerts an upwardly directed force on the armature **26** so that the large diameter portion **26A** of the armature **26** is held against the bottom surface of the plate **72** and the resilient biasing assembly **36.** The force provided by the spring **92** is much less than the compressive force of the plurality of springs **76.** Thus, the plate **72** serves as a stop establishing the normal position of the armature **26.** When the armature **26** is moved upwardly, the spring **92** elongates and moves the ball and connected cable **80** downwardly within the tube **88.** Alternatively, when the armature **26** is driven through a power stroke, the spring **92** is compressed, the ball guide **90** moves upwardly within the tube **88,** and a portion of the flexible cable **80** passes over the pulleys **82** and **84** to enter the chamber **14.** A cover **94** is detachably mounted on the top open end of the head portion **12A** to facilitate the assembly of the above-described components.

The magazine assembly **22** can be of any of the types well known in the art and generally comprises a resiliently biased pusher for feeding a strip of staples **20** from right to left (FIG. **1**). Since the driver blade **24** in the normal position shown in FIG. **1** occupies the drive track **18** in front of the first staple **20** in the strip, a staple **20** is not normally disposed in the drive track **18.** However, when the armature **26** and the connected driver blade **24** are elevated upon energization of the upper winding **34,** the lower end of the blade **18** clears the crown **20A** of the first staple **20** in the strip, and the magazine assembly **22** feeds the first staple **20** into the drive track **18** below the lower end of the driver blade **24.**

As set forth above, the operation of the tool **10** and more specifically the selective energization of the windings **32** and **34** by the alternating current input potential supplied over the line conductors **42** is controlled by the power supply or control circuit **40.** This circuit preferably is formed as an encapsulated circuit disposed within the hollow handle **12B.** The operation of the control circuit **40** and thus of the tool **10** is controlled by a manually actuated switch indicated generally as **100** (FIG. 3) having an operator portion **100A** (FIG. 1) projecting out of the handle portion **12B** to normally rest on the trigger **38.** The switch **100** is shown in its normal position in FIG. 3 and is operated to its alternative state by actuation of the trigger **38** and elevation of the operator **100A.**

The construction of the control circuit **40** (FIG. 3) is well known. More specifically, substantially identical circuitry for selectively energizing the winding **34** is shown and described in detail in U.S. Pat. No. 3,662,190, and a circuitry **102** for selectively energizing the lower winding **32** is shown and described in U.S. Pat. No. 3,434,026. In general, the control circuit **40** is so arranged that when a switch **100** is actuated to its alternate setting from the one shown in FIG. **3** to initiate a cycle of operation of the tool **10,** the winding **34** is energized for the first complete positive-going half cycle of the input potential applied to the lines **42.** This energization of the upper winding **34** automatically triggers the energization of the lower winding **32** on the next following and oppositely poled half cycle of the alternating current input potential.

In view of the detailed description of the circuit for controlling the winding **34** in the above-identified patent, only a brief summary of this circuit is set forth therein, and reference is made to the above-identified patent for a detailed description.

When an alternating current potential is applied to the lines **42,** a trigger capacitor **104** charges up so that the end of the capacitor **104** adjacent the switch **100** is negatively charged. When it is desired to energize the winding **34,** the switch **100** is operated into the opposite position from that shown in FIG. 3 by operating the trigger **38.** This connects the negative end of the trigger capacitor **104** to the lower line **42.** The next time the upper head **42** goes positive with respect to the lower lead **42,** a positive pulse is generated at the anode of a silicon controlled rectifier (SCR) **106.** This positive pulse causes current to flow through a resistor **108,** and this current causes a transistor **110** to conduct. The transistor **110** connects a diode **112** to the positive side of the trigger capacitor **104.** A positive current now flows through the diode **112** and into the control gate of an SCR **114.** The SCR **114** now conducts and connects the winding **34** directly across the supply lines **42** for the remainder of the positive half cycle.

At the end of the positive half cycle, the SCR **114** turns off and stops the flow of current to the winding **34.** The switch **100** still connects the trigger capacitor **104** to the line **42,** but now the trigger capacitor **104** is discharged, and it holds the collector of the transistor **110** at roughly the potential of the lower line **42.** Thus, no current flows from the trigger capacitor **104** into the control gate of the rectifier **114.** Since it would take at least two volts to overcome the junction potentials of the transistor **110,** the diode **112,** and the SCR **114,** a margin of insurance is provided which insures that the SCR does not fire a second time. Ultimately, when the switch **100** is returned to the position shown in FIG. **3,** a charging path is re-established for the trigger capacitor **104,** and the capacitor **104** is recharged.

When the winding **34** is energized by rendering the SCR **114** conductive, the field of the energized winding **34** retracts the small diameter portion **26B** of the armature **26** into the opening **30** with the cable **80** being taken up by extension of the compression spring **92** within the tube **88.** The insertion of the armature **26B** into the opening **30** is limited by engagement with the depending portion **66B** on the top plate **66A.** As the armature **26** moves upwardly, the lower end of the driver blade **20** clears the crown **20A** of the first staple **20** and permits this staple to be advanced into the drive track **18** beneath the lower end of the driver blade **24.** Further, during this upward movement of the armature **26,** the plate **72** resting on the shoulder provided by the large diameter portion **26A** is elevated against the compressive force of the plurality of springs **76.** Thus, these springs are all compressed to store energy subsequently to be imparted to the armature **26** and its connected driver blade **24.**

When the control circuit **40** terminates conduction through the SCR **114** and the upper coil or winding **34** is no longer energized, the compression springs **76** acting on the plate **72** drive the armature **26** and the driver blade **24** downwardly so that the driver blade **24** engages the staple **20** in the drive track **18** and starts driving or setting of this fastener. When the plate **72** strikes the cushion **78,** further movement of the plate **72** is arrested, and this plate is uncoupled from the armature **26** so that it moves downwardly into the opening **28** with the force of inertia imparted by release of the energy stored in the previously compressed springs **76.** During this movement of the armature **26,** the cable **80** moves into the opening **30** by compressing the spring **92** within the tube **88.**

Referring back to the control circuit **40,** when the SCR **114** is placed in conduction, the circuit **102** effects the energization of the lower coil or winding **32** on the next following or negative-going half cycle of the alternating current potential input. More specifically, when the SCR **114** is placed in conduction, a capacitor **116** is charged through a diode **118.** At the termination of the period of conduction of the SCR **114,** the upper line **42** begins to go negative relative to the lower line **42,** and an SCR **120** is properly biased for conduction. The diode **118** is now back biased, and the capacitor **116** discharges through a resistance element **122** to provide gate current for the SCR **120.** This places the SCR **120** in conduction so that the coil **32** is connected directly across the input lines **42.** At the termination of the negative-going half cycle, conduction through the SCR **120** is terminated.

The armature **26** is disposed closely enough adjacent the lower winding **32** to be within its effective field when the SCR **120** is placed in conduction to energize this winding. This positioning of the armature **26** relative to the winding **32** at the time energizing the winding **32** is controlled or determined by the biasing force applied to the armature **26** by the biasing assembly **36,** the position into which the armature **26** was retracted within the upper winding **34,** the mass of the armature **26** and its connected blade **24,** and the spacing of the windings **32** and **34.** These factors are adjusted to insure the desired position of the armature **26** relative to the field of the winding **32** as this winding is energized.

Thus, the field of the energized winding **32** adds additional energy to the moving armature **26** which is im-

parted to the driver blade **24** for driving the fastener **20** disposed within the drive track **18.** When the energization of the winding **32** is terminated, as described above, the compressed tension spring **92** moves the ball guide **90** downwardly within the tube **88** and retracts the flexible cable **80** so that the armature **26** is retracted to the normal position shown in FIG. **1** determined by engagement of the shoulder formed on the large diameter portion **26A** with the apertured plate **72.** The tool **10** remains in this condition even though the trigger **38** remains depressed because an additional cycle of operation of the control circuit **40** cannot be initiated until such time as the switch **100** is released to recharge the trigger capacitor **104.** When the trigger **38** is released, the switch operator **100A** returns to its normal position, the switch **100** is restored to its normal position, and the control circuit **40** is prepared for an additional cycle of operation.

The use of the winding or coil **34** to retract the armature **26** against the bias of the assembly **36** provides an additional advantage of reducing the recoil of the tool **10** away from a workpiece. More specifically, this retraction of the armature **26** in a direction away from the workpiece results in a reaction on the tool **10** tending to force the nosepiece structure **16** downwardly toward the workpiece. With the mass of the tool **10** thus moving toward the workpiece, the recoil resulting from the subsequent downward movement of the armature **26** and the blade **24** during the driving of a fastener or staple **20** is damped or reduced. This recoil reduction is of particular advantage in tools wherein the terminal velocity of the moving system, i.e., the armature **26** and the blade **24,** is low. As an example, the movable drive components in an electric tacker attain a lower maximum terminal velocity than the comparable piston and driver blade in a pneumatic stapler.

Although the present invention has been described with reference to a single illustrative embodiment thereof, it should be understood that numerous other modifications and embodiments can be devised by those skilled in the art that will fall within the spirit and scope of the principles of this invention.

What is claimed and desired to be secured by Letters Patent of the United States is:

1. An electric tool for driving fasteners into a workpiece using an electric potential comprising

a housing with a nosepiece structure defining a drive track,

a magazine assembly for feeding successive fasteners into the drive track at a given position therein,

fastener driving means including a driver movable in the drive track and an armature for actuating the driver, said driver normally occupying at least a portion of said given position in the drive track to prevent a fastener from entering the drive track,

resilient operating means coupled to the fastener driving means for imparting movement to the driver by resilient force,

winding means magnetically coupled to said armature for stressing the resilient operating means,

and a control circuit coupled to the winding means and energized by the potential for energizing the winding means for a period of time to stress the resilient operating means and then deenergizing the winding means to release the resilient operating means and to momentarily withdraw the driver from said given position in the drive track so that the magazine assembly can feed a fastener into the drive track beneath the driver.

2. An electric tool for driving fasteners comprising

a housing including a nosepiece defining a drive track,

a pair of spaced winding means having aligned openings therein,

fastener driving means including a driver slidable in the drive track and armature means coupled to the driver and including magnetic means movable in said aligned openings,

resilient means coupled to the fastener driving means and arranged to bias the driver into the drive track,

and a control circuit coupled to the pair of winding means for controlling the sequential energization thereof, said control circuit including first means to energize one of the winding means to move the driver away from the drive track and stress the resilient means and second means to energize the other one of the winding means after said one of the winding means so that the resilient means and said other winding means jointly move the driver toward the drive track.

3. The electric tool set forth in claim **2** including

a magazine assembly for feeding fasteners into the drive track at a given location therein,

and stop means for the fastener driving means normally positioning the driver in the drive track in said given location to prevent a fastener entering the drive track until the driver has been moved by the energization of said one winding means.

4. An electric tool for driving fasteners into a workpiece comprising

a housing including a nosepiece structure defining a drive track, the end of the nosepiece being adapted to be placed adjacent the workpiece,

a pair of spaced first and second winding means in the housing, at least the first winding means including an opening,

fastener driving means including a driver slidable in the drive track and armature means for actuating the driver, the armature means including a magnetic portion movable in the opening of the first winding means,

stop means,

resilient means coupled to the armature means and biasing the armature means and driver toward the nosepiece structure, said resilient means normally engaging the stop means,

coupling means coupling the resilient means to the second winding means and being movable away from the stop means in a direction away from the nosepiece structure to stress the resilient means when the second winding means is energized,

and a control circuit coupled to the first and second winding means for energizing the second winding means followed by the first winding means whereby the resilient means is stressed and released to supply kinetic energy to the fastener driving means followed by acceleration of the armature means as the first winding means is energized.

5. The electric tool set forth in claim **4** in which

the coupling means includes an opening in the second winding means and an extending portion to the armature means movable within the opening in the second winding means.

6. The electric tool set forth in claim **4** in which

the resilient means includes an apertured member separably coupled to the armature means and a plurality of spaced compression springs disposed between the apertured member and the housing.

7. An electric tool for driving fasteners into a workpiece comprising

a housing having a chamber and a nosepiece structure defining a drive track,

vertically spaced first and second windings in the chamber having aligned openings therein,

fastener driving means including a driver movable in the drive track and an armature means with a magnetic portion movable in the openings,

a coupling means movably mounted between the first and second windings and coupled to the armature means for movement with the armature means in a direction toward the first winding and away from the nosepiece structure, said coupling means permitting movement of the armature means free of the coupling means when the armature moves toward the second winding and the nosepiece structure,

resilient means interposed between the coupling means and the housing to be stressed by movement of the coupling means and armature away from the nosepiece structure,

and control means coupled to the first winding for momentarily energizing the first winding to move the armature means toward the first winding to stress the resilient means and for then energizing the second winding to move the armature means toward the nosepiece structure and away from the coupling means.

8. The electric tool set forth in claim **7** in which

the resilient means are coaxially mounted relative to the openings in the first and second windings.

9. The electric tool set forth in claim **7** in which

the coupling means includes a shouldered portion on the armature means and a movable plate resting on the shouldered portion,

and the resilient means includes a plurality of spaced compression springs interposed between the housing and the plate.

10. An electric tool for driving fasteners into a workpiece using a potential with successive undulations comprising

a housing with a nosepiece structure defining a drive track,

fastener driving means including a driver movable in the drive track and an armature for actuating the driver,

resilient operating means coupled to the fastener driving means for imparting movement to the driver by resilient force and including a first winding means for stressing the resilient operating means,

a second winding for imparting motion to the driver and including an opening in which the armature is movable,

and a control circuit coupled to the first and second winding means and energized by the potential for energizing the first winding on a given undulation in the potential and for energizing the second winding on a following undulation.

11. An electric tool for driving fasteners into a workpiece using an electric potential comprising

a housing with a nosepiece structure defining a drive track,

a magazine assembly for feeding successive fasteners into the drive track at a given position therein,

fastener driving means including a driver movable in the drive track and an armature for actuating the driver,

resilient operating means coupled to the fastener driving means for imparting movement to the driver by resilient force.

a winding means for stressing the resilient operating means by moving at least the armature in a direction away from the nosepiece structure and against the bias of the resilient operating means,

and a control circuit coupled to the winding means and energized by the potential for energizing the winding means for a brief period of time to accelerate the armature in a direction away from the nosepiece structure and produce a reaction force acting on the tool and tending to force the nosepiece structure against the workpiece, the control circuit thereafter terminating the energization of the winding means to release the resilient operating means for actuating the fastener driving means to drive a fastener.

* * * * *