May 24, 1949. J. M. WILSON 2,471,181

RELAY

Filed Nov. 30, 1942 2 Sheets-Sheet 1

Fig. 1.

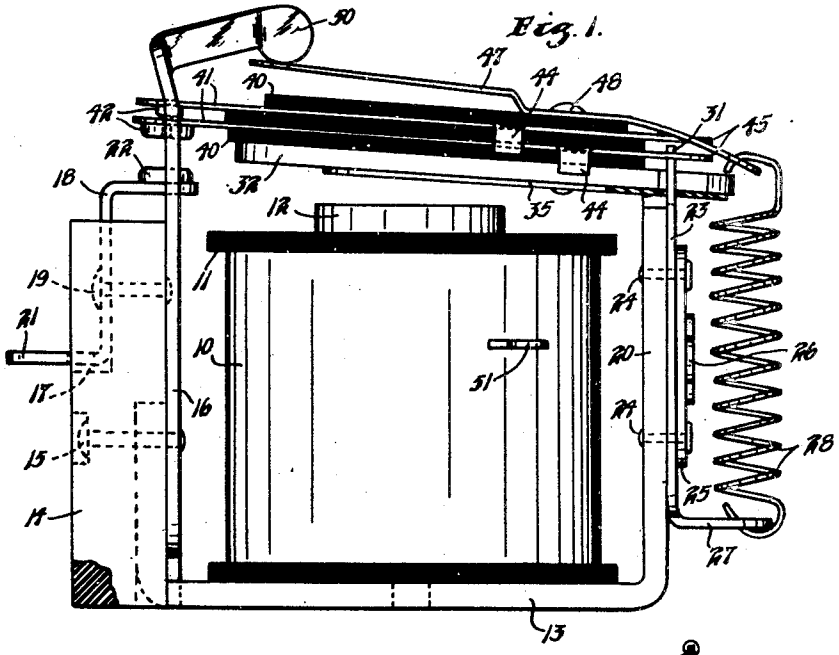

Fig. 2.

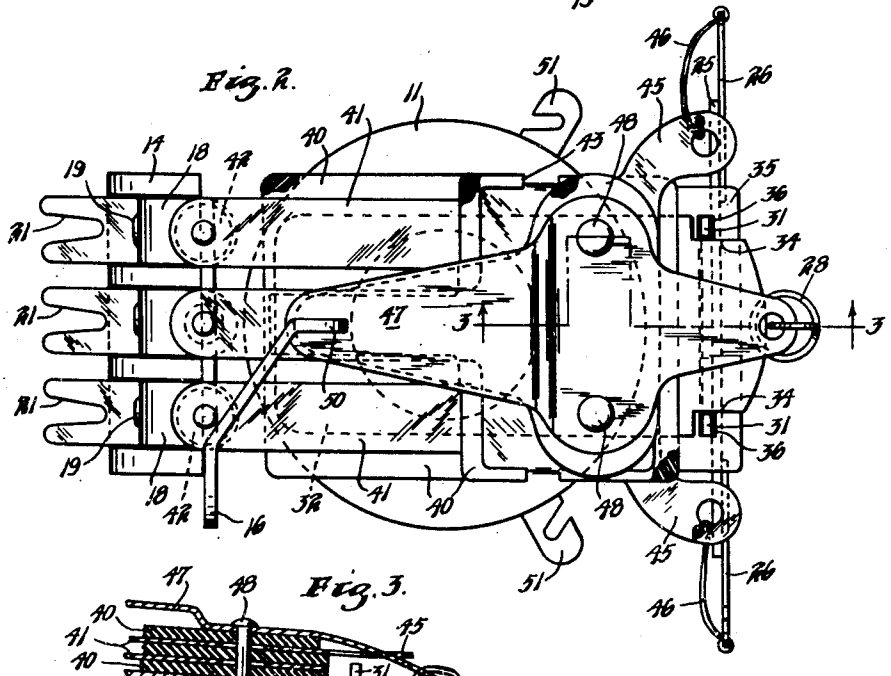

Fig. 3.

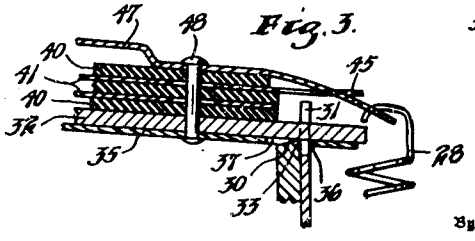

Inventor
JOHN M. WILSON.

George N. Fisher
Attorney

May 24, 1949. J. M. WILSON 2,471,181

RELAY

Filed Nov. 30, 1942

2 Sheets-Sheet 2

Fig. 4.

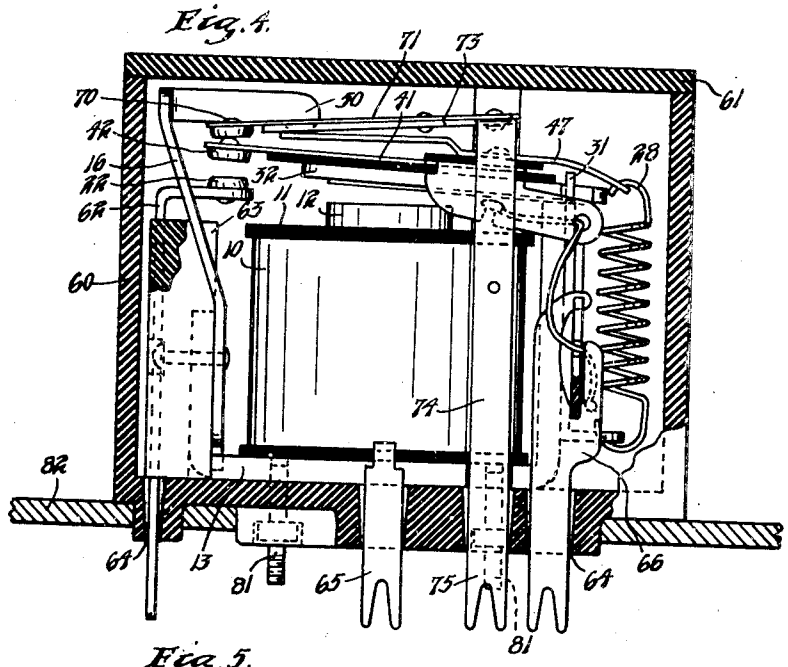

Fig. 5.

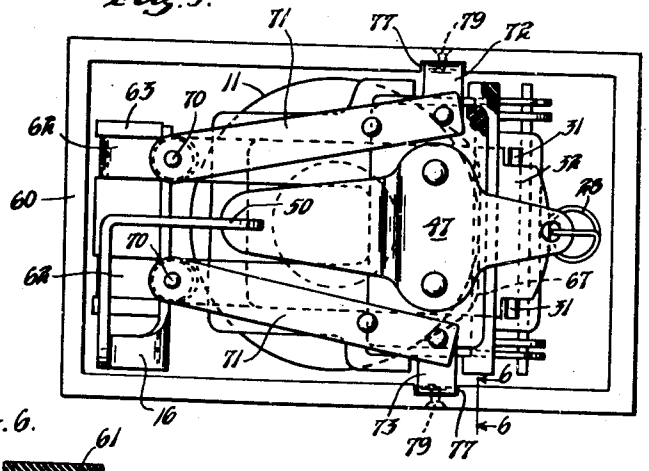

Fig. 6.

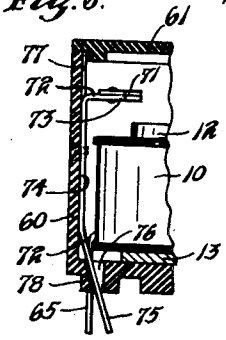

Fig. 7.

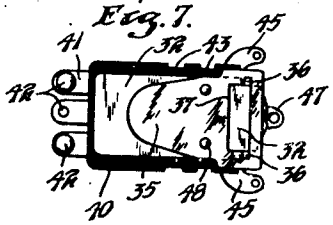

Inventor
JOHN M. WILSON.

By

George N. Fisher
Attorney

Patented May 24, 1949

2,471,181

UNITED STATES PATENT OFFICE

2,471,181

RELAY

John M. Wilson, Minneapolis, Minn., assignor to Minneapolis-Honeywell Regulator Company, Minneapolis, Minn., a corporation of Delaware

Application November 30, 1942, Serial No. 467,364

14 Claims. (Cl. 200—104)

1

The present invention relates to electromagnetic relays, or to devices in which a current flowing in a winding connected in a first electrical circuit causes the operation of a switch connected in a second electrical circuit.

An object of the present invention is to provide an improved electromagnetic relay which is especially adapted for rapid and frequent operation.

Another object of the present invention is to provide an improved electromagnetic relay which is especially adapted for use in connection with the control of electrical circuits on aircraft. A further object is therefore to provide a relay in which the size and weight of the structure is reduced to a minimum.

Another object is to provide an improved hinge or pivot structure for the armature of a relay adapted for rapid and frequent operation.

A further object of the present invention is to provide, in a relay adapted for rapid and frequent operation, an armature structure of small mass and hence of low inertia. A still further object is to provide resilient means for stopping the motion of such an armature towards its retracted position, thereby preventing any tendency of the armature to bounce.

A further object is to provide an improved stop structure for limiting the movement of a relay armature toward its retracted position. A still further object is to construct such a stop of deformable material, so that the spacing of the relay contacts when the winding is deenergized may be readily adjusted.

Another object is to provide an improved housing and terminal connection arrangement for an electromagnetic relay.

Another object of the present invention is to provide an improved relay of the same general type as that shown and claimed in my prior Patent No. 2,241,838, issued May 13, 1941.

Other objects and advantages of my invention will become apparent from a consideration of the appended specification, claims, and drawing, in which:

Figure 1 is an elevational view of a relay embodying certain features of my invention,

Figure 2 is a plan view of a slight modification of the relay illustrated in Figure 1,

Figure 3 is a partial sectional view along the line 3—3 of Figure 2, illustrating in detail the construction of the hinge in the relay of Figures 1 and 2,

Figure 4 is an elevational view, partly in section, of a modified form of the relay of Figure 1,

2

Figure 5 is a plan view of the relay of Figure 4,

Figure 6 is a view taken along the line 6—6 of Figure 5, illustrating a detail of construction of the relay of Figures 4 and 5, and

Figure 7 is a plan view of the under side of the armature of the relay illustrated in Figures 1–3.

Figures 1, 2 and 3

Referring to Figure 1, there is shown a relay including a coil 10 wound on a spool 11, which surrounds a core member 12. The core member 12 is attached, by any suitable means, to the center of the portion of a U-shaped frame member 13, the core member 12 and U-shaped frame member 13 constituting a core structure having a winding or coil 10 mounted thereon and comprising two spaced magnetic members. As will be later noted, an armature 32 is mounted on one of these spaced magnetic members for movement relative to the other.

The coil 10 is provided with terminals 51, through which it may be connected in an electrical circuit.

A panel 14, of insulating material, is attached, for example by a rivet 15, to the left upright portion of the U-shaped frame member 13. Also attached to the left upright of the frame member 13 by means of the rivet 15 is a stop member 16, of some deformable material. The upper portion of the outside lateral surface of the panel 14 is provided with a plurality of channels 17, adapted to receive a corresponding number of conductor strips 18, each of which may be fixed in position on the panel 14 by a rivet 19.

Each conductor strip 18 has its lower end turned outwardly and bifurcated to form a terminal structure 21 which is adapted to receive the end of an electrical conductor. The upper end of each contact strip 18 is bent at right angles to the central portion of the strip and carries at its extremity a stationary contact 22.

The right upright of the U-shaped frame member 13 carries a plate 23, which may also be of magnetic material. The plate 23 may be fixed to the frame member 13 by any suitable means, such as rivets 24. Rivets 24 also fasten to the upright 20 a panel 25 of insulating material, which carries, by any suitable means, a pair of wing terminals 26.

The lower end of the plate 23 is bent outwardly, as at 27, and is apertured to receive a hook on the lower end of a tension spring 28.

The upper end of the upright 20 is beveled, as at 30 (see Figure 3), to provide a sharp edge 33 at the termination of the outer surface thereof.

The upper end of the plate 23 terminates in a pair of spaced projections 31. An armature 32, of magnetic material, is adapted to rest on the knife edge 33. The armature 32 is provided with notches or apertures 34, through which the projections 31 pass. Attached to the under side of the armature 32 is a spacer strip 35, of non-magnetic material, which is apertured as at 36 to receive the projections 31 of plate 23, and is apertured at 37 so that the knife edge 33 may directly engage the armature 32. (See Figure 7.)

It may be observed that the hinge or pivot arrangement described has several advantages. Among these are the fact that the only wearing contact between the armature 32 and frame member 13 takes place directly between these two members along the knife edge 33. Since both of these members are formed of relatively hard ferromagnetic material, the life of the hinge is enhanced. Furthermore, since the contact takes place along a sharp edge, the possibility of sticking due to residual magnetism is greatly reduced. The projections 31, which serve as guides for the armature, pass loosely through the apertures 36, so that little or no binding action takes place there. The spacer strip 35 is made thin to further prevent any binding action. It may be noted that the spacer strip 35 performs two separate functions. In the first place, the apertured portion cooperates with the projections 31 to position the armature 32. In the second place, the opposite end of the strip 35 acts as a non-magnetic spacer between core 12 and armature 32, thereby preventing sticking of the armature when the core is energized.

The armature 32 carries, in alternately stacked relationship, a plurality of insulator strips 40 and conductor strips 41. Each of the conductor strips 41 carries, at its extremity opposite the knife edge 33, a contact 42. The contacts 42 are adapted to engage the stationary contacts 22 upon attraction of armature 32 as a result of energization of coil 10.

Each of the insulator strips 40 is notched, as at 43, and the conductor strips 41 are provided with ears 44, which interflttingly engage the notches 43 and maintain the stacked insulating and conducting strips in their proper relationship. The end of each conductor strip 41 adjacent the knife edge 33 terminates in a projection 45, which is apertured to receive a pigtail connection 46 whose opposite end is attached to one of the wing terminals 26.

Mounted on the top of the stack of insulating strips 40 and conductor strips 41 is a flat spring member 47. The entire armature assembly, comprising armature 32, spacer strip 35, the stacked conductor strips 41 and insulating strips 40, and the flat spring member 47, is held together by a pair of rivets 48.

The flat spring member 47 includes two projections which extend laterally in opposite directions from the rivets 48. The left extension of the flat spring member 47, is offset upwardly, and its end is positioned just under the extremity 50 of the stop member 16. The extremity 50 is made circular in contour so that the area of contact between extremity 50 and spring member 47 will be substantially the same for all positions to which the extremity 50 may normally be adjusted by deformation of stop member 16.

The opposite extremity of spring member 47 is apertured to receive a hook on the upper end of the tension spring 28, which serves to bias the armature 32 and the assembly mounted thereon to its retracted position, as shown in Figure 1.

The armature structure described has the advantages of simplicity and small mass, so that it is capable of rapid movement. The spring member 47 provides a resilient stop for the retractive movement of the armature, and reduces any tendency of the armature to bounce, which is inherently small because of its low mass.

The deformable stop member 16 provides a convenient means for setting the normal spacing between the contacts 22 and 42. This may be done by merely bending the member 16 with a pair of pliers or other suitable tool.

Figures 4, 5, and 6

In Figures 4, 5, and 6 is illustrated an arrangement whereby a relay of the type shown in Figure 1 may be mounted in a rectangular box-like housing 60 having a cover plate 61. The cover plate 61 may be attached to the housing 60 by any suitable means, not shown. In addition to the housing 60, the relay of Figure 4 differs from the relay of Figure 1 chiefly in the construction of the terminals by which electrical connections may be made to the various switch contacts. Therefore, those elements of the relay structure of Figure 4 which correspond exactly to similar elements in Figure 1 have been given the same reference characters.

In Figure 4, the stationary contacts 22 are carried by conductor strips 62 which extend vertically through channels in an insulating panel 63 and pass through apertures 64 in the base of the housing 60. The lower end of the conductor strips 62 may be constructed to form suitable terminals for the attachment of external electrical conductors. It may be noted that conductor strips 62 and panel 63 correspond to strip 18 and panel 14 of Figure 1.

The coil winding 10 of Figure 4 is provided with a pair of terminals 65, which take the place of the terminals 51 of Figures 1 and 2. Only one of the terminals 65 appears in the drawing. The terminals 65 are adapted to project downwardly from the coil winding 10 through additional apertures 64 in the base of the housing 60. The coil 10 may be loosely mounted on the core 12 to permit it to move slightly relative to the core 12. Such an arrangement permits movement of terminals 65 relative to their corresponding apertures in the housing 60, and provides a more flexible structure, making for easier assembly. The movement of coil 10 on the core 12 may be limited by making one or both ends of the spool 11 noncircular in contour, as at 67 in Figure 5. Then if the coil tends to move too far, the projection 67 engages the upright portion of frame member 13, preventing further movement.

In a similar manner, the wing terminals 26 of Figure 1 have been replaced in Figure 4 by a pair of terminals 66, which project downwardly through apertures 64 in the base of housing 60.

The relay of Figure 4 is also provided with a set of "back" or "out" contacts 70. By back or out contacts are meant contacts engaged by the movable contact 42, when the relay winding 10 is deenergized. Each back contact 70 is carried by a flexible leaf spring 71, whose opposite end is attached to a relatively rigid, although somewhat flexible, conductor strip 72. The strip 72 includes a substantially horizontal portion 73 adapted to support the leaf spring 71, a long vertical portion 74, and an oblique portion 75 which is fashioned to form an electrical terminal at its

lower end. The oblique portion 75 is so constructed in order that the terminal at its end may project through the housing 60 at a point spaced from the lateral edge of the housing, and in substantial alignment with the terminals 65 and 66.

The structure illustrated in Figures 4, 5, and 6 is such that the entire relay assembly except for the back contacts and their associated terminal structure, may be inserted into the housing 60 at one time, and the various terminals will extend through registering apertures in the bottom of the casing 60. All the apertures may be tapered, as indicated in the drawing, to facilitate assembly. Bolts 81 may be used to retain the relay in the casing 60.

After the main portion of the relay assembly has been so inserted in the casing, each of the conductor strips 72 may then be inserted in the space between the coil 10 and the housing 60, and moved downwardly until oblique portion 75 passes through a suitable positioned aperture 76 in the bottom of housing 60. The inside surface of housing 60 may be grooved, as at 77, and the aperture 76 may be beveled, as at 78, so as to guide the movements of strip 72 during assembly. The groove 77 cooperates with a screw 79 to hold the strip 72 fixed in its proper position in the housing 60.

The entire relay may then be mounted on a control panel, as illustrated at 82 in Figure 4, with all external connections completely housed and with all terminals appearing on the side of the panel opposite that on which the relay is mounted.

While I have shown and described certain preferred embodiments of my invention, other modifications thereof will readily occur to those skilled in the art, and I therefore wish my invention to be limited only by the appended claims.

I claim as my invention:

1. An electromagnetic relay, comprising in combination, a core structure having a coil thereon and comprising two spaced magnetic members, an armature having apertures therethrough and being pivotally mounted on a first of said magnetic members for movement relative to the other, said first magnetic member terminating in a pair of spaced projections extending into said apertures and a sharp edge between said projections engaging said armature, and a flexible spacer strip of non-magnetic material fixed on the surface of said armature adjacent said core structure and having first aperture means corresponding in position to but smaller than the apertures in said armature, and second aperture means through which said sharp edge engages said armature.

2. An electromagnetic relay, comprising in combination, a core structure having a coil thereon and comprising two spaced magnetic members, one of said spaced magnetic members terminating in a sharp edge, an armature pivotally mounted on said sharp edge for movement relative to the other of said magnetic members, and a flexible spacer strip of non-magnetic material fixed on the surface of said armature adjacent said core structure and having aperture means therein through which said sharp edge engages said armature.

3. An electromagnetic relay, comprising in combination, a core structure having a coil thereon and comprising two spaced magnetic members, one of said magnetic members terminating in a sharp edge, an armature mounted on said one

of said magnetic members for movement relative to the other of said magnetic members, and a flexible spacer strip of non-magnetic material fixed on the surface of said armature and extending between said armature and said core structure, said spacer strip having aperture means through which said sharp edge engages said armature.

4. An electromagnetic relay, comprising in combination, a core structure having a coil thereon and comprising two spaced magnetic members, an armature having apertures therethrough pivotally mounted on a first of said magnetic members for movement relative to the other magnetic member, said first magnetic member terminating in a pair of spaced projections extending into said apertures, and a flexible spacer strip of non-magnetic material fixed on the surface of said armature and extending between said armature and said core structure, said spacer strip having aperture means corresponding in position to but smaller than the apertures in said armature.

5. An electromagnetic relay, comprising in combination, a core structure having a coil thereon and comprising two spaced magnetic members, an armature having apertures therethrough pivotally mounted on a first of said magnetic members for movement relative to the other magnetic member, said first magnetic member terminating in a pair of spaced projections extending into said apertures and a sharp edge between said projections engaging said armature, and a flexible strip of non-magnetic material fixed on said armature and having aperture means corresponding in position to but smaller than the apertures in said armature.

6. An electromagnetic relay, comprising in combination, a core member, a frame member, a coil surrounding a portion of said core member, an armature mounted for movement relative to said core member in accordance with the energization of said coil, movable contact means carried by said armature, stationary contact means positioned in the path of said movable contact means for engagement thereby, a resilient member mounted on said armature and electrically insulated from said movable contact means, a substantial portion of said resilient member being spaced from said armature so as to be yieldable with respect thereto, means for limiting the movement of said armature away from said core member comprising an elongated arm having one fixed end on said frame member and extending into the path of said substantial portion of said resilient member, said resilient member engaging said arm when said coil is in an unenergized condition, said arm being of a material which can be deformed readily to vary the position of the portion thereof engaging said resilient member so as to adjust the deenergized position of said armature.

7. An electromagnetic relay, comprising in combination, a core member, a frame member including a leg portion, an armature pivotally mounted on said leg for movement relative to said core member, movable contact means carried by said armature, stationary contact means positioned in the path of said movable contact means for engagement thereby, deformable means for limiting the movement of said armature away from said core member, a spring member for biasing said armature away from said core member, and a resilient member mounted on said armature and insulated from said contact means, said resilient member extending into the path of said deformable means for engagement there-

by and having a portion extending beyond said leg and secured to said spring member.

8. An enclosed electromagnetic relay having a frame and a core member mounted thereon with a coil surrounding said core member and loosely mounted thereon for limited movement with respect thereto, an armature pivoted on said frame in accordance with the energization of said coil for movement relative to said core member, movable contact means actuated by said armature and stationary contact means positioned for engagement by said movable contact means, electrical connections from said contact means comprising a plurality of terminals supported by and insulated from said frame member and extending therefrom substantially parallel to each other, electrical connections for said coil comprising a pair of terminals mounted thereon and extending substantially parallel to said plurality of terminals, and a housing enclosing said relay having a removable cover and a plurality of openings in the side opposite said cover so that upon insertion of said relay in said housing said terminals project through said openings, said loose mountings of said coil on said core member permitting limited movement of said pair of terminals with respect to said plurality of terminals thereby facilitating assembly of said relay in said housing.

9. An enclosed electromagnetic relay having a frame, a core member mounted thereon, energizing means positioned on said core member, and an armature pivotally mounted on said frame for movement relative to said core member, movable contact means carried by said armature, a first stationary contact means insulated from and supported by said frame and positioned for engagement by said movable contact means upon attraction of said armature, said first stationary contact means including terminal portions extending substantially parallel to each other, a housing for said relay having removable cover and a plurality of openings in the side opposite said cover, so that upon insertion of said relay in the said housing said terminal portions project through said openings, and second stationary contact means for engagement of said movable contact means upon retraction of said armature, said second stationary means comprising an elongated conductor strip having a terminal at one end and a contact at its opposite ends and insertable in said housing after the rest of said relay is assembled therein so that said one end projects through an aperture in said housing with a terminal portion substantially parallel to the said plurality of terminals with said contact positioned in the path of said movable contact means.

10. An electromagnetic relay, comprising in combination, a frame member with a core member mounted thereon, said frame member having a portion disposed from said core member and terminating in a pair of projections separated by a sharp edge, an armature having apertures at one end pivoted on said frame portion for movement relative to said core member, a flexible non-magnetic plate attached to one surface of said armature and movable therewith, said plate having apertures at one end to coincide with the apertures in said armature through which the projections of said frame portion extend, a further aperture in said flexible non-magnetic plate through which said sharp edge of said portion of said frame extends to engage said armature, a resilient member mounted on and movable with said armature, deformable means

secured to said frame and positioned to be engaged by said resilient member to limit the movement of said armature away from said core member, and a spring member secured at one extremity to said frame member and attached at the other extremity to a portion of said resilient member extending beyond said frame portion, said spring member biasing said armature and said non-magnetic plate into engagement with said frame portion and away from said core member.

11. An electromagnetic relay, comprising, in combination, a frame member and a core member attached thereto, a coil surrounding said core member, said frame member including a leg radially spaced from said core member, an armature pivotally mounted on said leg of said frame member for movement relative to said core member, movable contact means, insulating means, resilient means, said contact means and said resilient means being mounted on said armature with said armature, said contact means, and resilient means insulated from one another by said insulating means, means securing said contact means to said armature and rigidly positioning said contact means, stationary contact means positioned in the path of said movable contact means for engagement thereby, deformable means for limiting the movement of said armature away from said core member, spring biasing means for biasing said armature away from said core member, said resilient means extending into the path of said deformable means for engagement thereby and having a portion extending beyond said leg of said frame and secured to said spring biasing means.

12. An electromagnetic relay, comprising in combination; a core member; a frame member including a leg portion; an armature pivotally mounted on said leg portion for relative movement to said core member; movable contact means; insulating means; resilient means; said contact means, insulating means, and resilient means being mounted on said armature with said armature with said contact means and resilient means insulated from one another by said insulating means; said insulating means having notches in the edges thereof; at least one of said contact means having ears engaging said notches and maintaining said insulating means and said contact means in proper relative positions; means securing said resilient means, insulating means and contact means to said armature; stationary contact means positioned in the path of said contact means for engagement thereby; deformable means secured to said frame member for limiting the movement of said armature away from said core member; and a spring for biasing said armature away from said core member, said resilient means extending into the path deformable means for engagement thereby and having a portion extending beyond said leg and secured to said spring member.

13. An electromagnetic relay, comprising in combination, a core member, a frame member including a leg portion, an armature pivotally mounted on said leg portion for movement relative to said core member, movable contact means comprising an insulating member and at least one conductor member having a terminal projection secured to said armature, said insulating member having a notch in the edge thereof, said terminal projection of said conductor member being bent to engage said notch and maintaining said insulating member and said conductor

member in their relative positions, stationary contact means positioned in the path of said movable contact means for engagement thereby, deformable means for limiting the movement of said armature away from said core member, a spring member for biasing said armature away from said core member, and resilient means mounted on said armature and insulated from said contact means, said resilient means extending into the path of said deformable means for engagement thereby, said deformable means being readily deformable to vary the position of engagement with said resilient means so as to adjust the deenergized position of said armature.

14. An electromagnetic relay comprising, in combination, a core-structure having a coil thereon and comprising two spaced magnetic members, an armature pivotally mounted on a first of said magnetic members for movement relative to the other magnetic member, movable contact means, insulating means, a resilient member, said contact means and said resilient member being mounted on said armature with said armature, said contact means, and said resilient member insulated from one another by said insulating means, means securing said contact means to said armature and rigidly positioning said contact means, stationary contact means positioned in the path of said movable contact means for engagement thereby, a stop for limiting the movement of said armature away from said core member, spring

biasing means for biasing said armature away from said core member, said resilient member extending into the path of said stop for engagement thereby and having a portion extending beyond said first magnetic member and secured to said spring biasing means.

JOHN M. WILSON.

REFERENCES CITED

The following references are of record in the file of this patent:

UNITED STATES PATENTS

Number	Name	Date
772,591	Varley	Oct. 18, 1904
921,625	Phelps	May 1, 1909
941,761	Corwin et al.	Nov. 30, 1909
946,489	Clement	Jan. 11, 1910
990,032	Clement	Apr. 18, 1911
1,103,530	Newburn	July 14, 1914
1,322,265	Rahling	Nov. 18, 1919
1,591,133	Kent	July 6, 1926
1,702,490	Brach	Feb. 19, 1929
1,856,050	Doman	Apr. 26, 1932
2,061,920	Piffath	Nov. 24, 1936
2,125,149	Bruns	July 26, 1938
2,198,704	Lazich	Apr. 30, 1940
2,217,406	Hanna	Oct. 8, 1940
2,241,748	Shaw	May 13, 1941
2,241,838	Wilson	May 13, 1941
2,292,134	Leonard	Aug. 4, 1942