(No Model.) 2 Sheets—Sheet 1.

R. J. CROWLEY.

SIGNALING APPARATUS.

No. 456,478. Patented July 21, 1891.

Fig 1

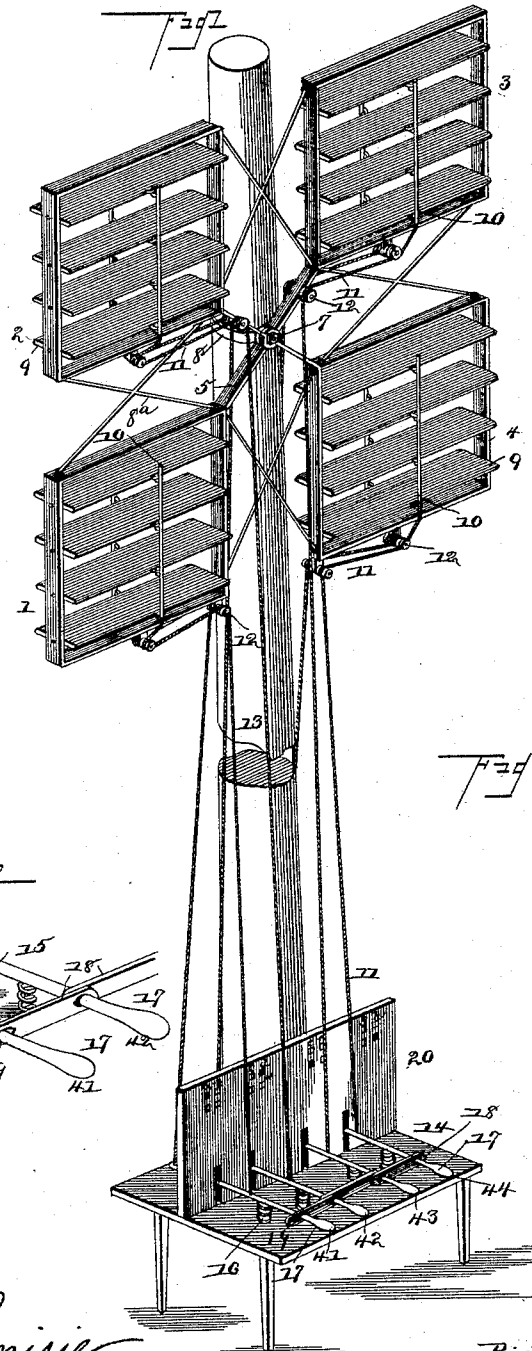

Fig 3

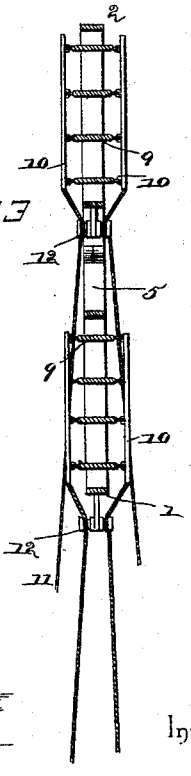

Fig 2

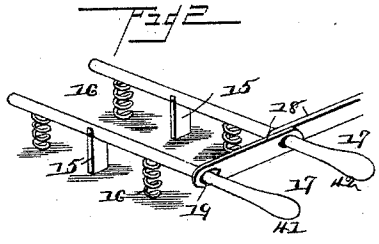

Witnesses

John Smith

Wm. Bagger

Inventor

Richard J. Crowley

By his Attorneys,

C. A. Snow & Co.

THE NORRIS PETERS CO., PHOTO-LITHO. WASHINGTON, D. C.

(No Model.)

2 Sheets—Sheet 2.

R. J. CROWLEY.

SIGNALING APPARATUS.

No. 456,478. Patented July 21, 1891.

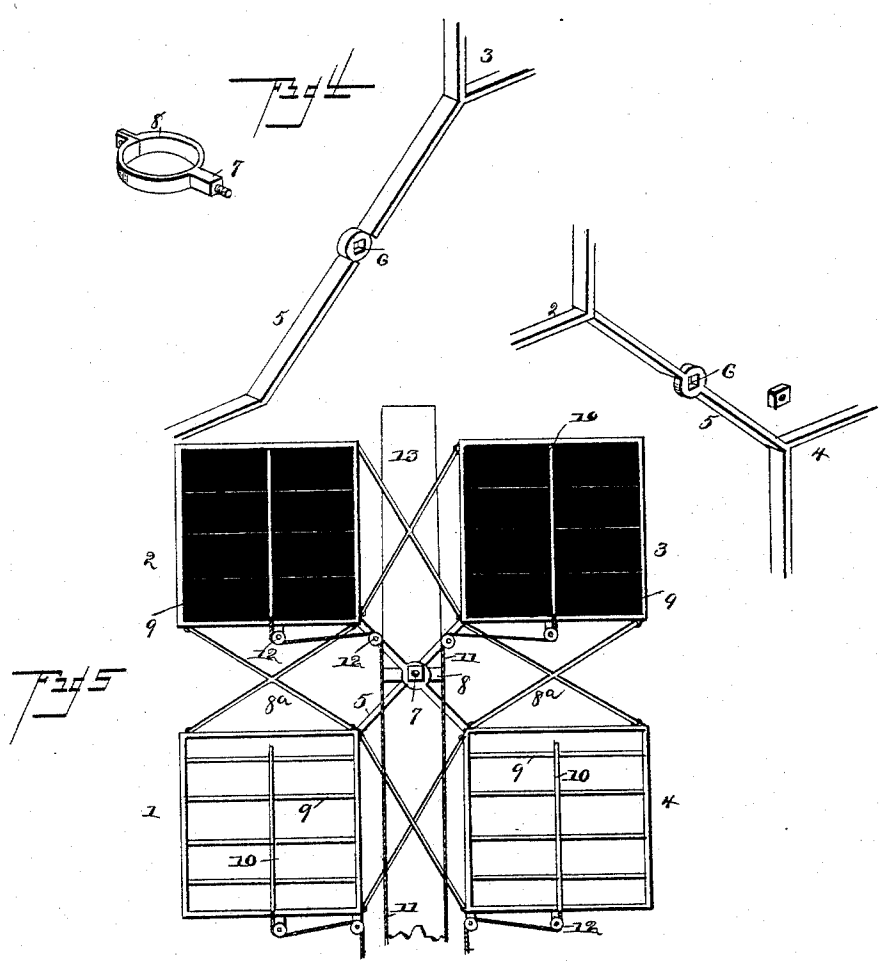

Witnesses

John Imrie

Wm. Bagger

Inventor

Richard J. Crowley

By his Attorneys,

C A Snow & Co.

THE NORRIS PETERS CO., PHOTO-LITHO., WASHINGTON, D. C.

UNITED STATES PATENT OFFICE.

RICHARD J. CROWLEY, OF LOS ANGELES, CALIFORNIA, ASSIGNOR OF SEVENTEEN-TWENTIETHS TO JAMES DOUGLASS, OF SAME PLACE, WILLIAM H. BURNETT, OF OURAY, COLORADO, AND ALFRED SALTER AND AUBREY DE VERE HUNT, OF LONDON, ENGLAND.

SIGNALING APPARATUS.

SPECIFICATION forming part of Letters Patent No. 456,478, dated July 21, 1891.

Application filed August 26, 1889. Renewed June 26, 1891. Serial No. 397,652. (No model.)

To all whom it may concern:

Be it known that I, RICHARD J. CROWLEY, a citizen of the United States, residing at Los Angeles, in the county of Los Angeles and State of California, have invented a new and useful Signaling Apparatus, of which the following is a specification.

This invention relates to an improved signaling apparatus which is designed more especially for marine-signaling, although it is by no means necessarily confined to this purpose; and it has for its object to provide an apparatus or device of this class which may be operated with great accuracy, speed, and ease, and without requiring special skill or previous instruction for its operation, to spell out words and sentences, and thereby convey messages from one point to another for considerable distances, limited only by the range of vision.

The invention, with these ends in view, consists, first, in the detailed construction of the signaling apparatus, and, secondly, in the alphabet-code used in transmitting signals thereby, as will be hereinafter fully described, and particularly pointed out in the claims.

In the drawings hereto annexed, Figure 1 is a perspective view of my improved signaling apparatus set up in position for operation. Fig. 2 is a detail view of the operating-levers. Fig. 3 is a vertical transverse sectional view taken through two of the screen-frames of the apparatus. Fig. 4 is a detail perspective view showing parts of the frame-work of the apparatus. Fig. 5 is a front view of the screen-frames in the act of transmitting a signal.

Like numerals of reference indicate like parts in all the figures.

1, 2, 3, and 4 designate four frames, which may be constructed in any suitable manner, so as to be light and yet very strong, of sheet metal or other suitable material. The said frames are connected in pairs by the diagonal frame-bars 5 5, crossing or intersecting each other and provided at their point of intersection with eyes 6, which are made square or of other suitable shape to fit upon a post 7, projecting from a strong clamping-ring 8. The bars 5, carrying the frames 1 2 3 4, are secured in position for operation upon the post 7 by means of a nut adjusted upon a screw-threaded stem projecting forwardly from the said post. Additional braces 8^a may be employed for the purpose of connecting and stiffening the several frames.

In the frames 1 2 3 4, which I designate the "screen-frames," are pivotally mounted the blinds 9, of which each frame may contain any desired number, which are arranged like the so-called "Venetian blinds," and which, when turned to a vertical position, will completely cover the said frame in which they are pivoted. The blinds 9 of each frame are connected at their front and rear ends by pivoted connecting-rods 10, to the lower ends of which are attached operating cords or wires 11, passing over suitably-arranged guide-pulleys 12 in a downward direction.

It will be observed from the foregoing and by reference to the drawings that the four frames are arranged practically in the form of a square, one at each of the four corners of said square. The ring carrying the screen-frames is in practice mounted upon a mast 13 or at any convenient elevated point which shall render the signaling apparatus visible at a great distance. It is also evident that the individual screen-frames are to be made of considerable size. The apparatus may be arranged permanently in position for operation; but usually the ring carrying the screen-frames is only to be hoisted when occasion shall require, suitable tackle being provided, which, however, forms no part of the present invention and has not been shown in the drawings. When the apparatus is arranged to be lowered when not in use, it may be taken apart and stored, so as to occupy but little space comparatively.

At the lower end of the mast or support carrying the signaling apparatus is arranged the operating-table 14, provided with brackets 15, to which are pivotally connected the operating-levers 41, 42, 43, and 44. Each of these operating-levers is connected in front and rear of its fulcrum with the lower end of one of the cords or wires 11, connected,

respectively, to the front and rear connecting-rods 10 of the blinds of the corresponding frame 1, 2, 3, or 4. Springs 16, arranged under the front and rear ends of the operating-levers, serve to maintain the latter normally in a horizontal position, thus likewise maintaining the blinds 9 in an approximately horizontal position. The front ends of the operating-levers have handles 17, and they are connected in pairs by means of the links 18, having slots 19, that work loosely over the ends of the levers. The latter therefore may be operated independently of each other by grasping the handles 17, while by grasping or merely depressing the links 18 two of the levers may be operated simultaneously with one hand.

It will be observed that by raising or depressing the operating-levers the blinds will be so manipulated that either their upper or under sides shall be exposed in the direction in which the signal is to be transmitted. The opposite sides of the blinds may be of contrasting colors, such as black and red, and a code of color-signals may be established to be used in connection with my apparatus. Mainly, however, the color-signals are intended to be used in stormy weather and when a comparatively long exposure of each letter is made necessary, experience having proven that bright colors are the more readily seen.

Mounted upon the operating-table in front of the operator is a board 20, upon which a diagram of the signal-code or alphabet-code is painted or otherwise inscribed.

The system of signaling by my improved apparatus consists in darkening one or more of the screen-frames, either a single time or twice in succession, for each letter or signal to be transmitted, the relative position of the frame or frames thus darkened determining the letter which is transmitted, according to a previously-established code. It will be understood that when the blinds are in their normal or approximately horizontal position they will be exposed with their edges to the angle of vision, and they will thus be practically invisible at the distance where the signal is to be read. When the blinds are operated by means of the operating-levers or turned to a vertical position, they will momentarily darken the frame or frames in which they are mounted, and will therefore be visible at a considerable distance. Now according to my proposed code each alternate letter of the alphabet will be indicated by a single darkening of one or more of the frames by operating the blinds mounted therein or turning said blinds once to a vertical position and immediately restoring them, while every other letter will be indicated by the same operation once repeated. Thus once darkening the upper left-hand screen-frame would signify the letter "A," while twice darkening the same frame in quick succession would signify letter "B." Once darkening the two upper screen-frames would or might signify letter "I," while twice darkening the same two frames in quick succession might signify letter "J," as previously determined by a pre-established code, which might be very simply formulated, and a suggestion for which will be found in Fig. 6 of the drawings, hereto annexed, which will be readily understood.

The code being inscribed upon the board directly in front of the operator may at all times be consulted by him, who will thus be enabled, even when comparatively inexperienced, to operate the apparatus with great speed and facility. It is obvious that a similar code-board will be found greatly serviceable in reading or translating the signals.

By the heliograph and flag systems of signaling the Morse alphabet-code is usually employed, certain movements or the duration of exposure of the signals taking the place of dots and dashes, of which no less than five are required to express certain letters. Counting each operation or darkening of one or more of the screen-frames the equivalent of a dot, it will be seen that no letter of the alphabet requires more than two dots to express it, while every alternate letter may be expressed by a single dot. It follows that my improved signaling apparatus may be operated for the transmission of messages at vastly greater speed than other devices heretofore constructed or devised with a similar object in view.

My improved signaling apparatus may be used for night-signaling either by focusing a strong light directly upon the screen-frames or by arranging the latter in front of lanterns, which will be darkened by the operation of the blinds. I would also state that the operating-levers may be arranged to be operated electrically when so desired, in which case they might be connected with a key-board at a distance from the operating-table.

In the practical manufacture of my improved signaling apparatus I do not desire to limit myself to the precise construction and arrangement of parts herein described, inasmuch as various changes and modifications might be made without departing from the spirit of my invention; nor do I desire to limit myself to the herein-described signal-code, inasmuch as other codes might be formulated that would practically answer the same purpose, and in connection with this may be mentioned the facility with which cipher-codes may be established and used in connection with my improved signaling apparatus merely by arbitrarily transposing the letter-symbols or in other ways which will readily suggest themselves.

Having thus described my invention, I claim and desire to secure by Letters Patent of the United States—

1. A signaling apparatus comprising four frames relatively arranged as at the corners of a square, in combination with the bars connecting diagonally-opposite frames crossing

each other and mounted upon a post projecting from a supporting-ring, the blinds mounted in the several frames, and suitable operating mechanism, substantially as and for the purpose set forth.

2. In a signaling apparatus, the combination of a series of frames, blinds mounted pivotally in the said frames, rods pivotally connecting the front and rear edges of the said blinds, a series of operating-levers, and cords or wires connecting said operating-levers in front and rear of their fulcra, with the rods connecting the front and rear edges of the blinds in the respective frames, substantially as and for the purpose set forth.

3. The combination of the frames, the blinds mounted pivotally therein, the pivoted connecting-rods, the cords or wires, the operating-levers, and the springs supporting the front and rear ends of said levers, substantially as and for the purpose set forth.

4. The combination, with the operating-levers, of the links connecting the said levers in pairs and having slots working loosely over the said levers, and operative means, substantially as and for the purpose set forth.

5. The combination of the frames, the blinds mounted pivotally therein, the pivoted connecting-rods, the cords or wires, the operating-levers, the springs supporting the front and rear ends of the latter, and the links connecting the said operating-levers in pairs, substantially as and for the purpose herein set forth.

6. The combination, in a signaling apparatus, with a series of frames having pivoted blinds, of levers suitably connected whereby the blinds in the said frames may be simultaneously operated, substantially as and for the purpose set forth.

In testimony that I claim the foregoing as my own I have hereto affixed my signature in presence of two witnesses.

RICHARD J. CROWLEY.

Witnesses:
JOHN H. SIGGERS,
WM. BAGGER.