United States Patent [19]

Yubisui et al.

[11] **Patent Number: Des. 306,176**

[45] **Date of Patent: ** Feb. 20, 1990**

[54] **COMBINED CALCULATOR AND CRADLE THEREFOR**

[75] Inventors: **Takahisa Yubisui; Hiroshi Sakaguchi; Masaki Kawamura,** all of Osaka, Japan

[73] Assignee: **Sharp Corporation,** Osaka, Japan

[**] Term: **14 Years**

[21] Appl. No.: **899,502**

[22] Filed: **Aug. 22, 1986**

[30] **Foreign Application Priority Data**

Feb. 25, 1986 [JP] Japan 61-6905

[52] **U.S. Cl.** **D18/7**

[58] **Field of Search** ..... D18/2, 6, 7, 11, 12; D10/2, 15, 30; D14/100, 106, 107, 141, 142, 146–149; 200/5 A; 235/61 R; 340/365, 700; 364/706–710

[56] **References Cited**

U.S. PATENT DOCUMENTS

D. 229,065	11/1973	Maeda	D18/7
D. 236,485	8/1975	Mox	D18/7
D. 266,855	11/1982	Yoshioka	D18/7
D. 284,368	6/1986	Stansbury	D14/141
3,515,816	4/1968	Laing	D14/142
4,157,588	6/1979	Ebihara	364/707

Primary Examiner—Nelson C. Holtje
Assistant Examiner—Caron D. Veynar
Attorney, Agent, or Firm—Flehr, Hohbach, Test, Albritton & Herbert

[57] **CLAIM**

The ornamental design for combined calculator and cradle therefor, as shown and described.

DESCRIPTION

FIG. **1** is a top view of a combined calculator and cradle therefor showing our new design;
FIG. **2** is a bottom plan view thereof;
FIG. **3** is a top plan view of the calculator portion thereof;
FIG. **4** is a bottom plan view thereof;
FIG. **5** is a front elevational view of the combined calculator and cradle therefor;
FIG. **6** is a rear elevational view thereof;
FIG. **7** is a right side elevational view, the left side elevational view being a mirror image thereof;
FIG. **8** is a exploded perspective view thereof.

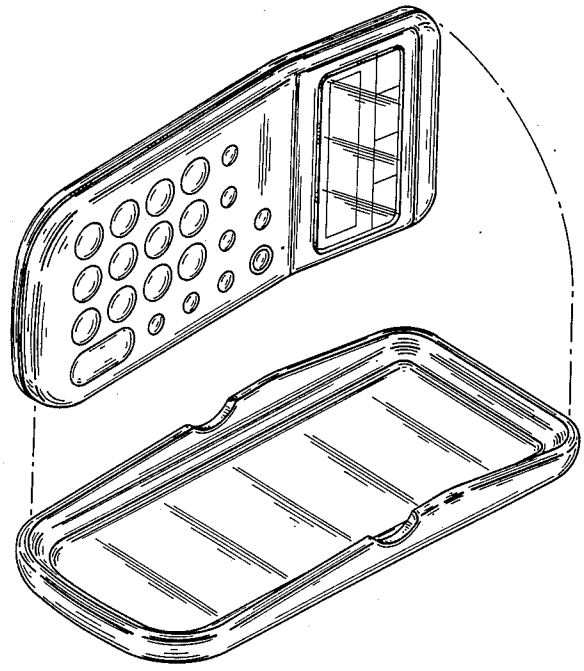

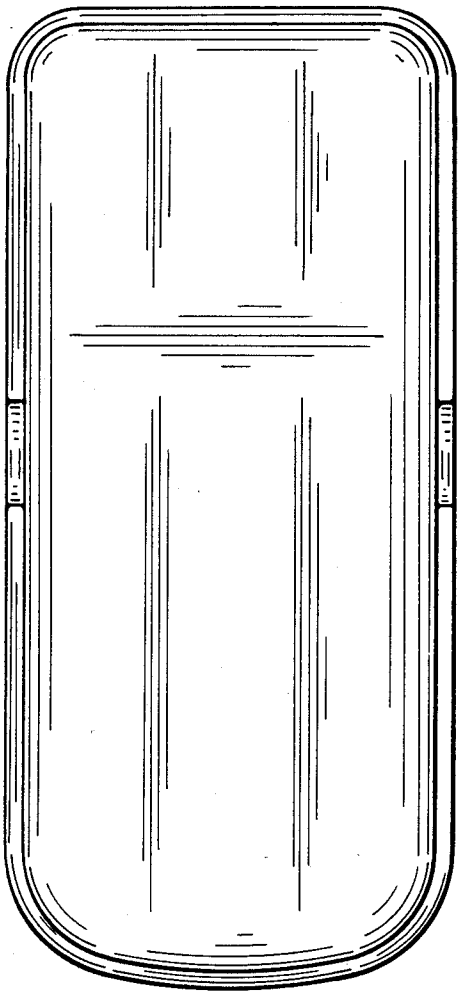

FIG_1

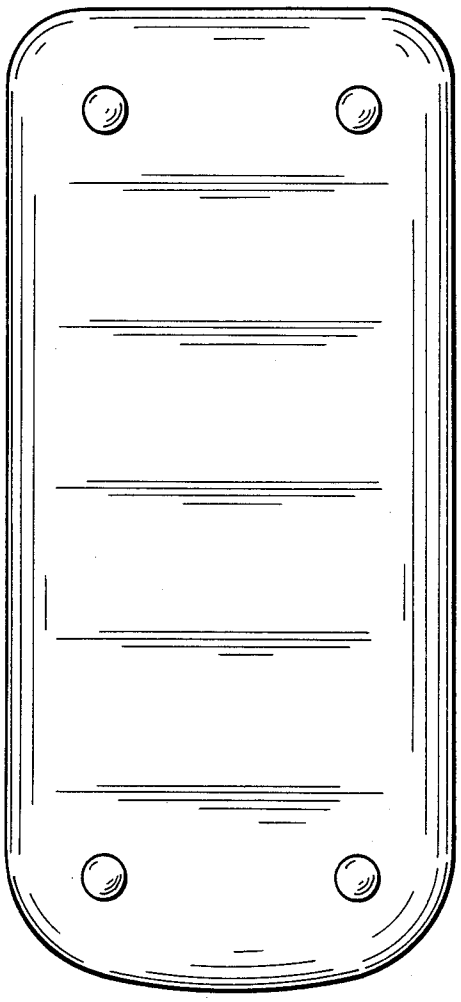

FIG_2

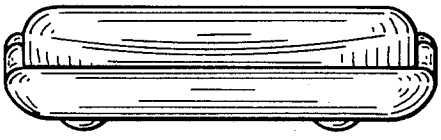

FIG_5

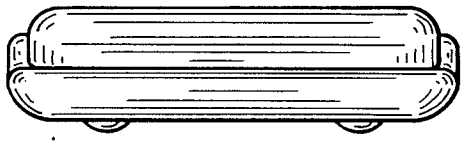

FIG_6

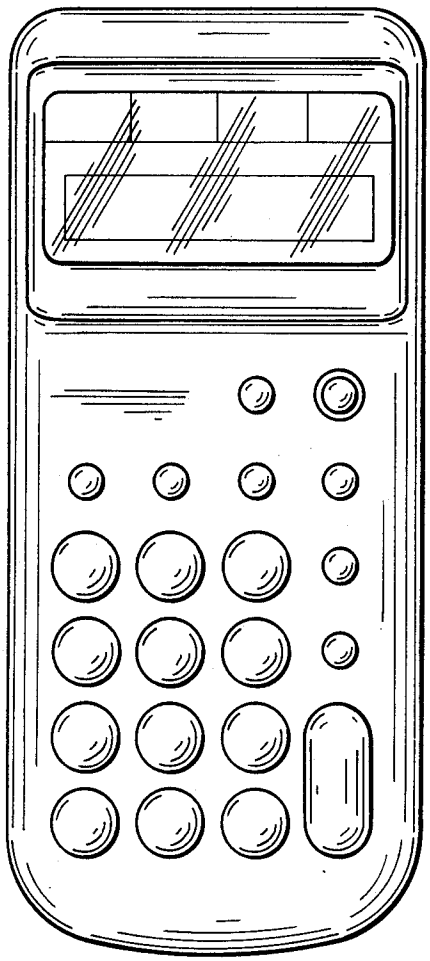

FIG_3

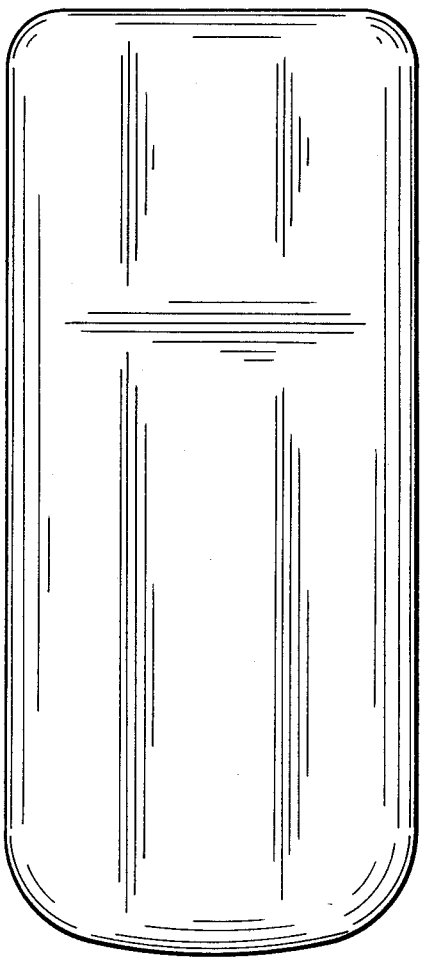

FIG_4

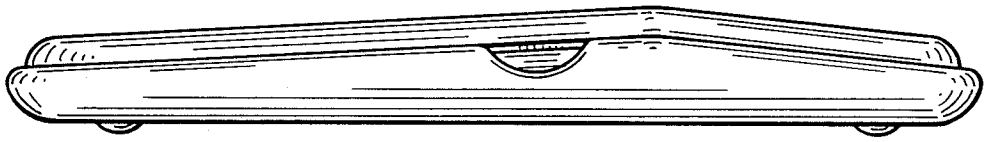

FIG_7

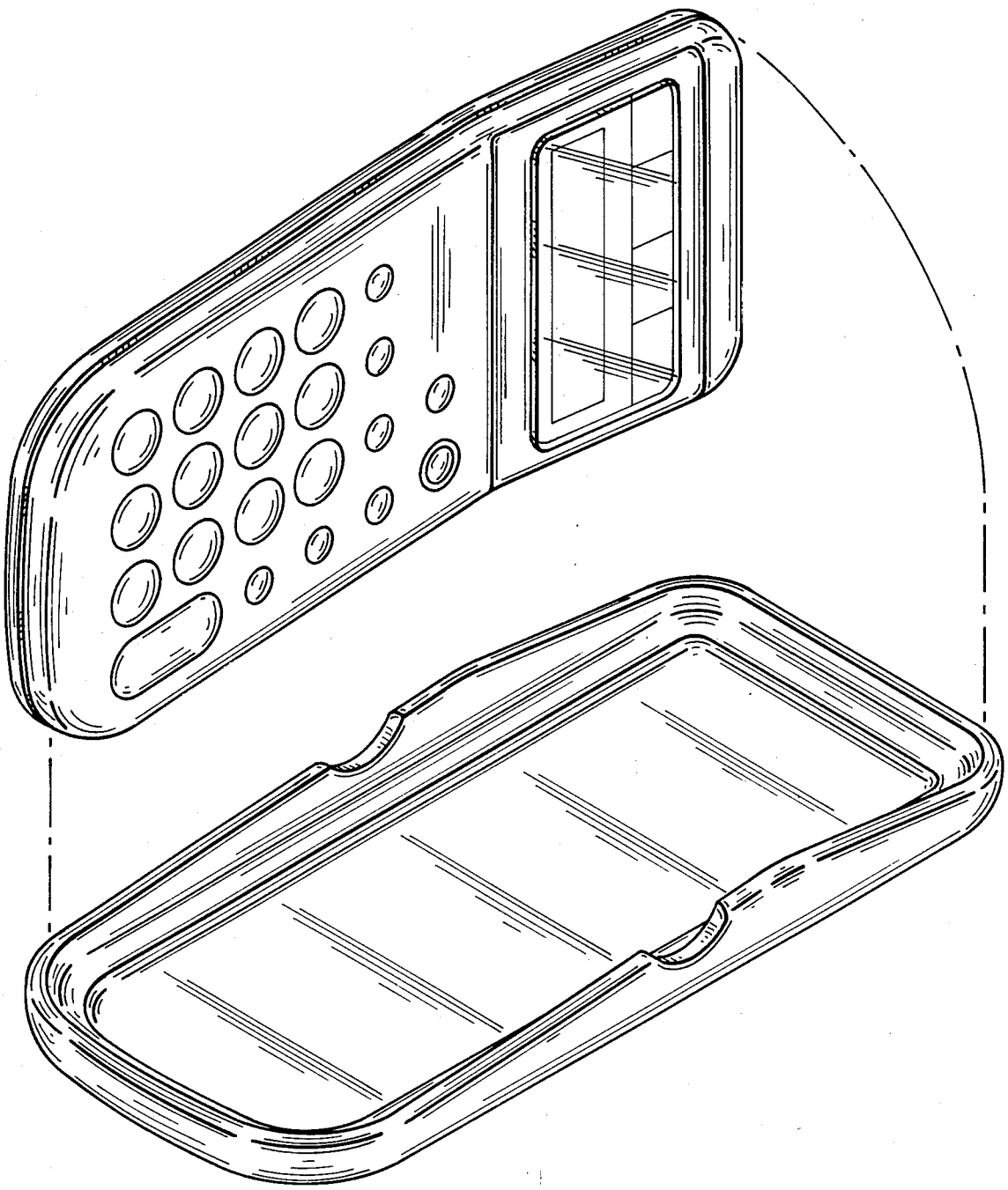

FIG_8