US 20130261758A1

(19) **United States**

(12) **Patent Application Publication**

**Claypool et al.**

(10) **Pub. No.: US 2013/0261758 A1**

(43) **Pub. Date: Oct. 3, 2013**

(54) **TIBIAL PROSTHESIS SYSTEMS, KITS, AND METHODS**

(71) Applicant: **ZIMMER, INC.**, Warsaw, IN (US)

(72) Inventors: **Jody Claypool**, Columbia City, IN (US); **Wayne Paprosky**, Winfield, IL (US); **David Lewallen**, Rochester, MN (US); **Steven Stump**, Goshen, IN (US); **Barjinder S. Chana**, Rancho Cordova, CA (US); **Michael G. Fisher**, Folsom, CA (US); **Kenneth D. Johannaber**, Rancho Murieta, CA (US); **Andrew P. Sizelove**, Folsom, CA (US)

(73) Assignee: **Zimmer, Inc.**, Warsaw, IN (US)

(21) Appl. No.: **13/837,774**

(22) Filed: **Mar. 15, 2013**

**Related U.S. Application Data**

(60) Provisional application No. 61/618,376, filed on Mar. 30, 2012, provisional application No. 61/740,268, filed on Dec. 20, 2012.

**Publication Classification**

(51) **Int. Cl.**
*A61F 2/38* (2006.01)

(52) **U.S. Cl.**
CPC ..... *A61F 2/389* (2013.01)
USPC ..... **623/20.32**

(57) **ABSTRACT**

Tibial prosthesis methods for balancing a knee joint during a surgical procedure are disclosed. A method can comprise inserting a first tibial shim component between a tibial bearing component and a tibial base or a tibial plate component in an anterior/posterior direction. The first tibial shim component can include one or both of a medial edge having a different height than a lateral edge or an anterior edge having a different height than a posterior edge. The method can further comprise testing one or more of a stability, a force balance, or a range of motion of a knee joint in which the first tibial shim component is inserted. If the testing result is not satisfactory, the method can include removing the first tibial shim component, and inserting a second tibial shim component between the tibial bearing component and the tibial base or tibial plate component in the anterior/posterior direction.

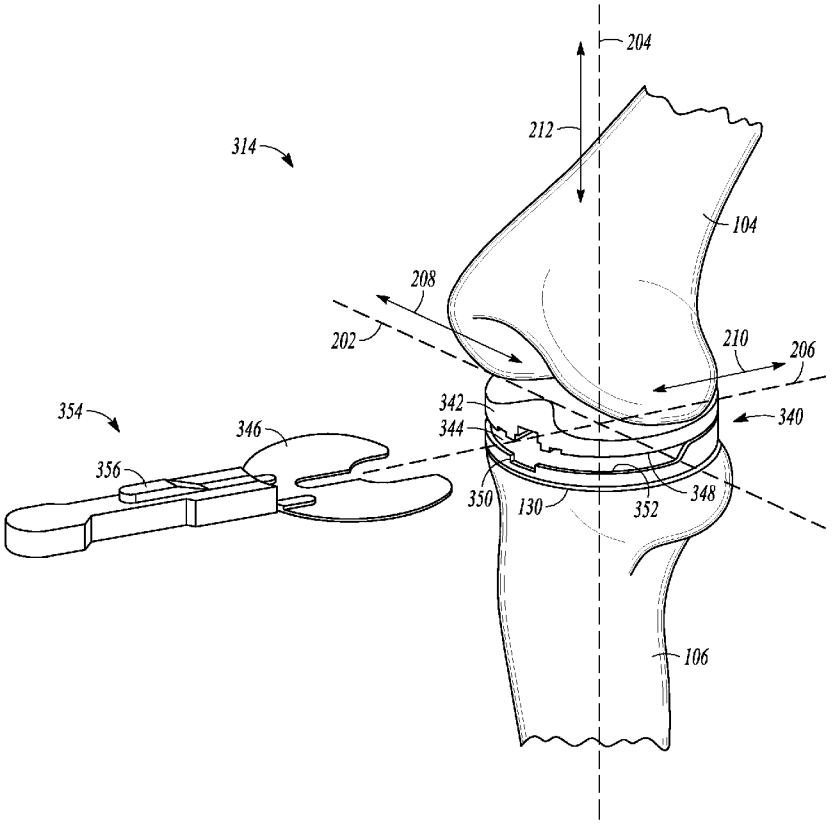

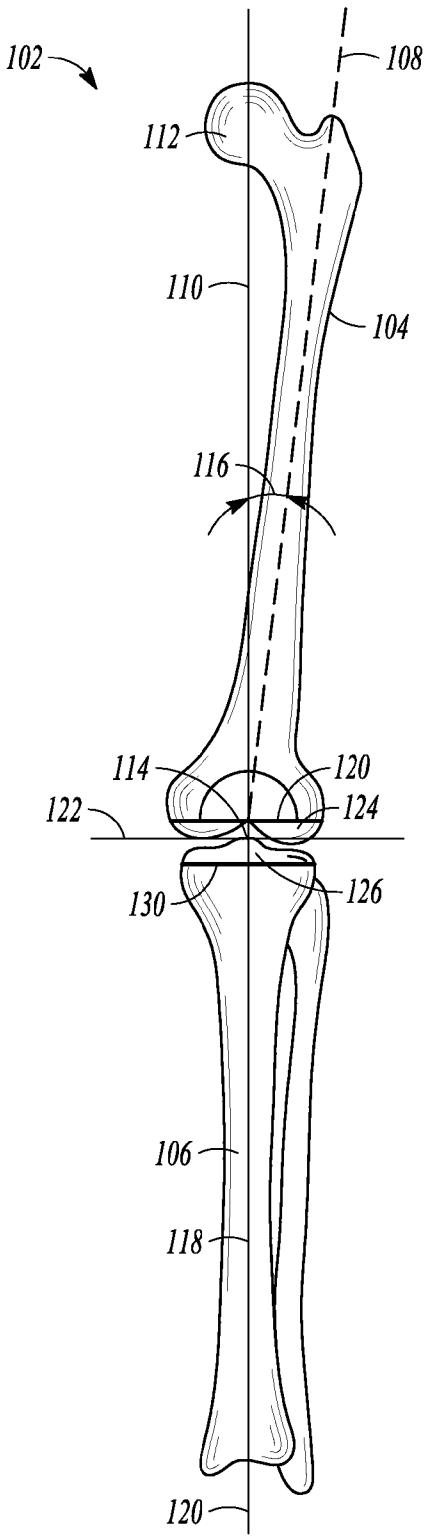


FIG. 1

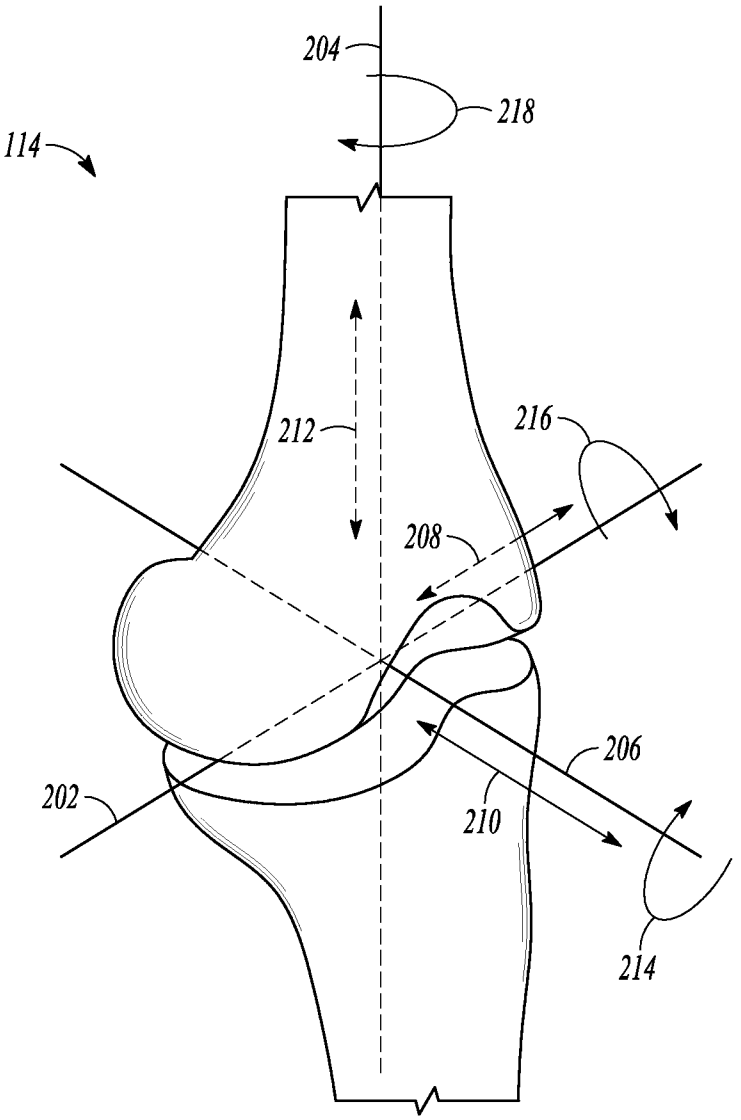


FIG. 2

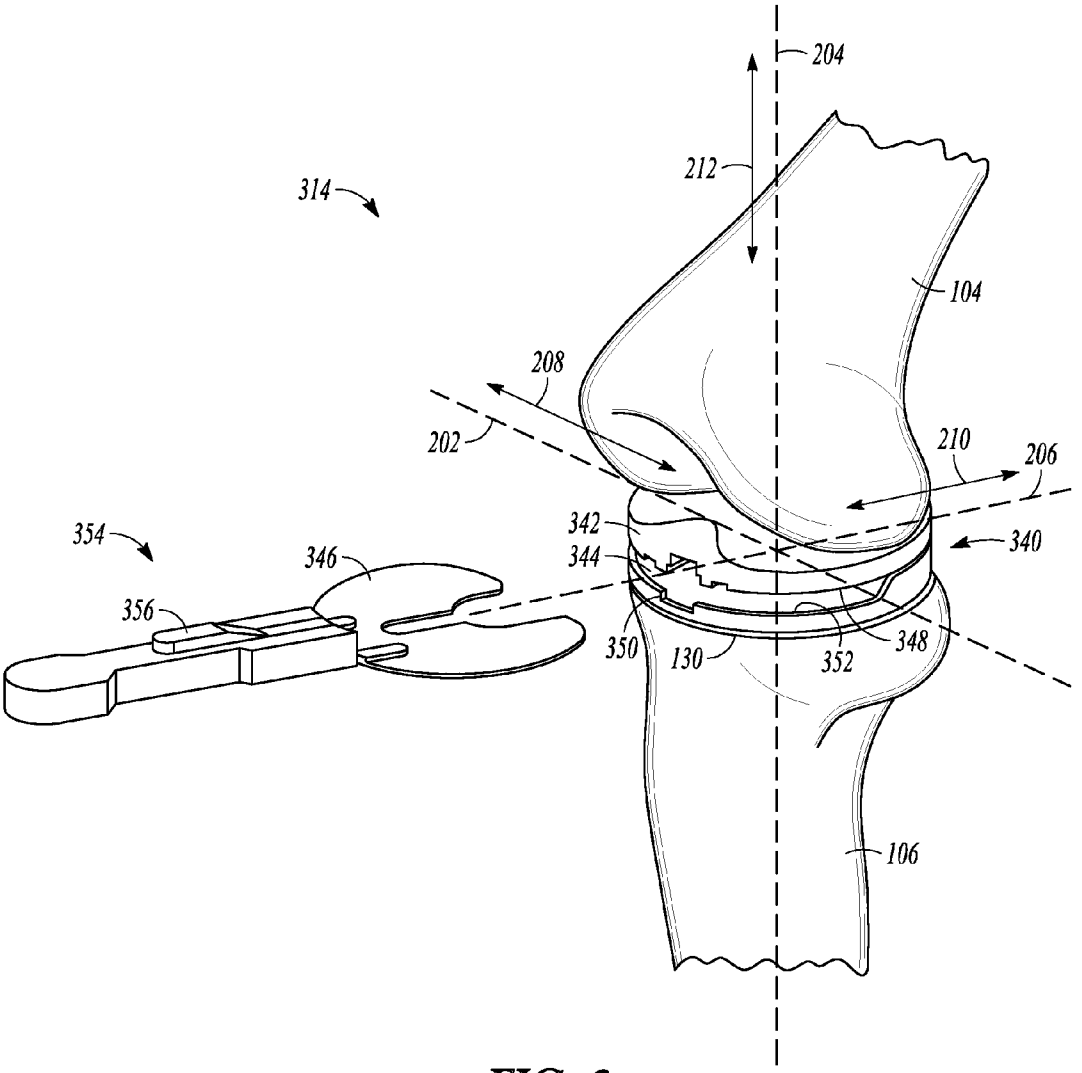
204
212
314
104
208
202
210
206
354
342
340
346
344
356
350
130
352
348
106

*FIG. 3*

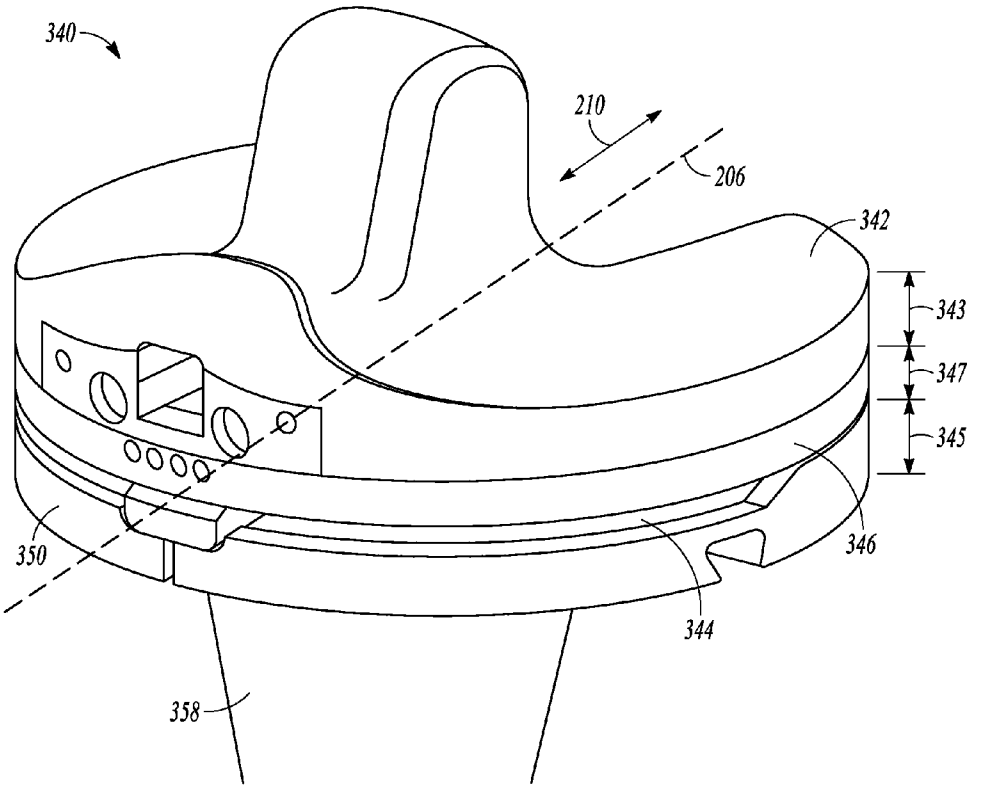


*FIG. 4A*

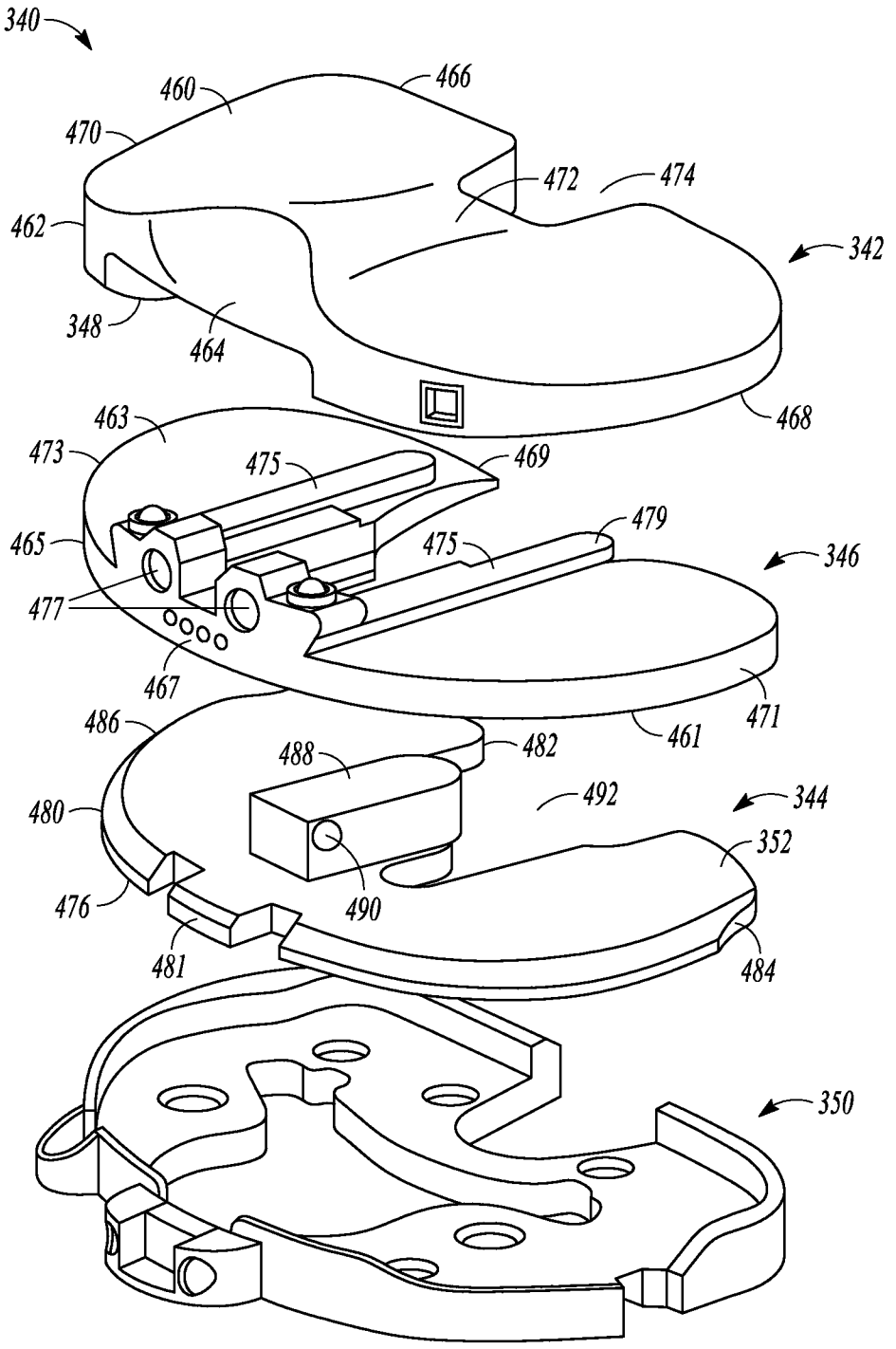
340
460
466
470
472
474
462
342
348
464
468
463
473
475
469
465
475
479
346
477
467
471
461
486
482
488
492
344
480
352
476
490
481
484
350

FIG. 4B

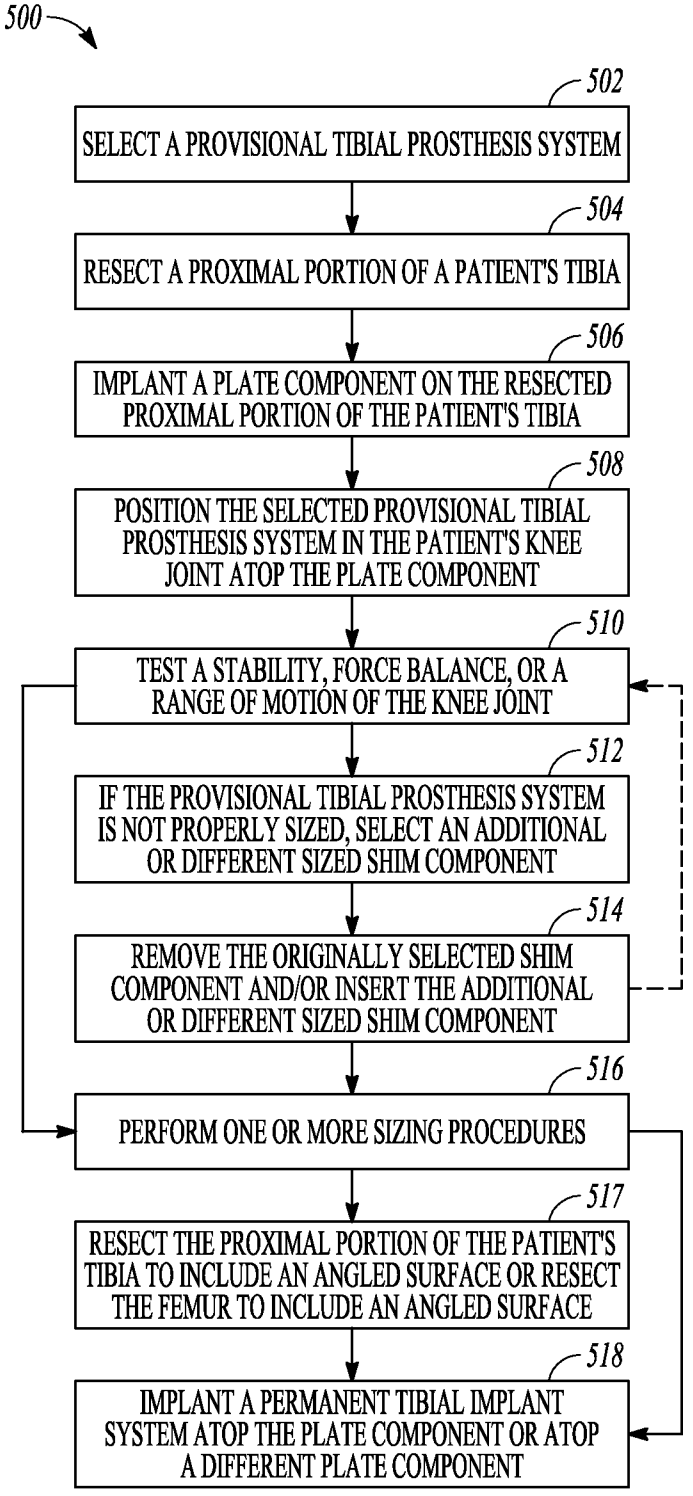
500
502
SELECT A PROVISIONAL TIBIAL PROSTHESIS SYSTEM
504
RESECT A PROXIMAL PORTION OF A PATIENT'S TIBIA
506
IMPLANT A PLATE COMPONENT ON THE RESECTED PROXIMAL PORTION OF THE PATIENT'S TIBIA
508
POSITION THE SELECTED PROVISIONAL TIBIAL PROSTHESIS SYSTEM IN THE PATIENT'S KNEE JOINT ATOP THE PLATE COMPONENT
510
TEST A STABILITY, FORCE BALANCE, OR A RANGE OF MOTION OF THE KNEE JOINT
512
IF THE PROVISIONAL TIBIAL PROSTHESIS SYSTEM IS NOT PROPERLY SIZED, SELECT AN ADDITIONAL OR DIFFERENT SIZED SHIM COMPONENT
514
REMOVE THE ORIGINALLY SELECTED SHIM COMPONENT AND/OR INSERT THE ADDITIONAL OR DIFFERENT SIZED SHIM COMPONENT
516
PERFORM ONE OR MORE SIZING PROCEDURES
517
RESECT THE PROXIMAL PORTION OF THE PATIENT'S TIBIA TO INCLUDE AN ANGLED SURFACE OR RESECT THE FEMUR TO INCLUDE AN ANGLED SURFACE
518
IMPLANT A PERMANENT TIBIAL IMPLANT SYSTEM ATOP THE PLATE COMPONENT OR ATOP A DIFFERENT PLATE COMPONENT

*FIG. 5*

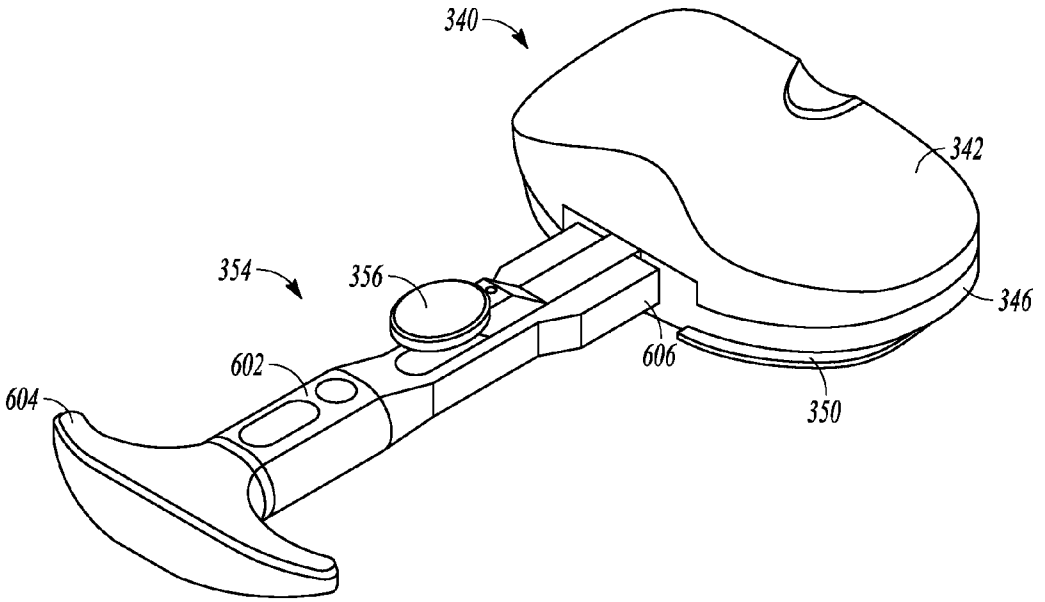


*FIG. 6A*

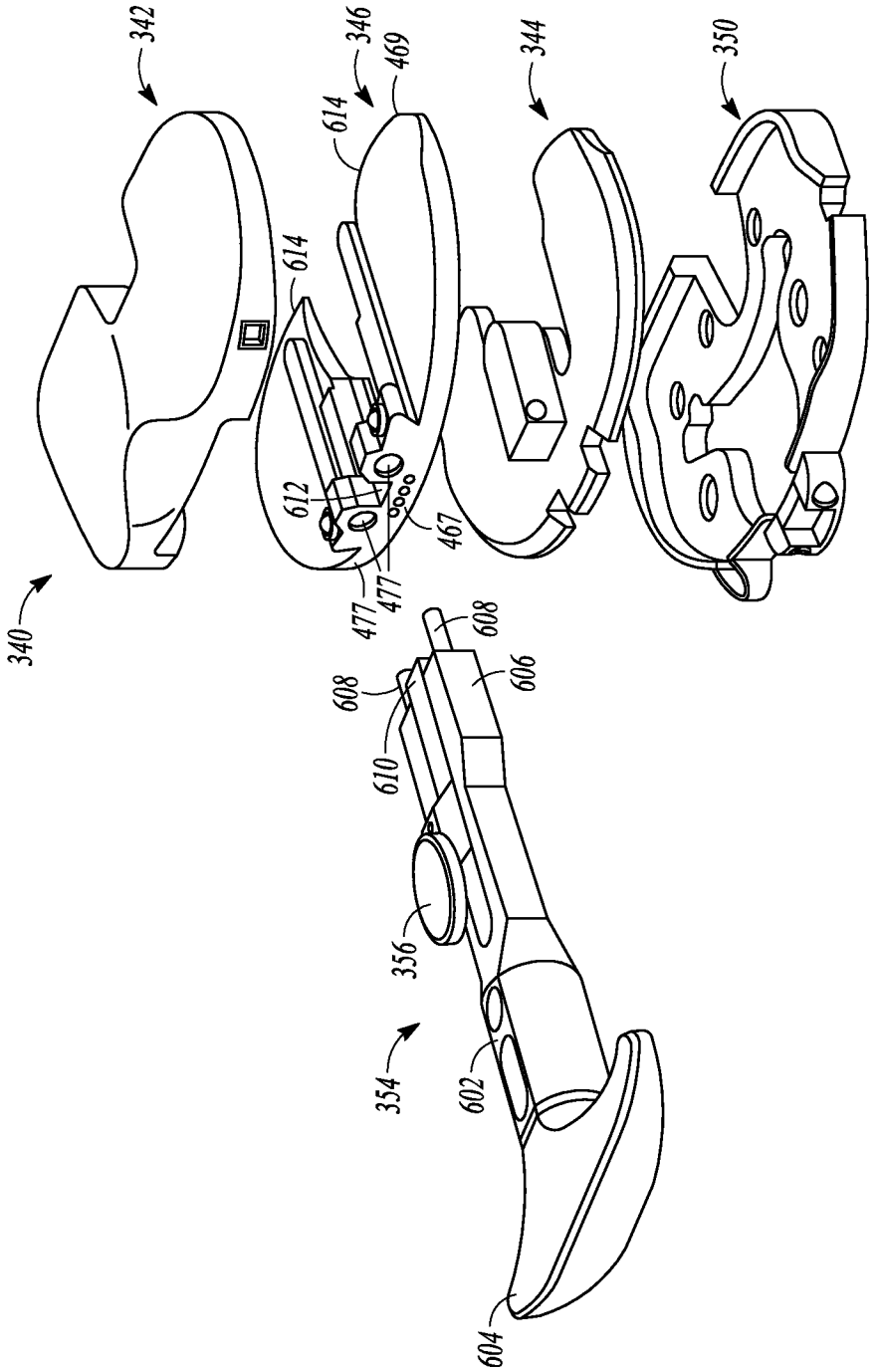
342
346
469
344
350
614
614
612
467
477
477
340
608
608
606
610
356
354
602
604

FIG. 6B

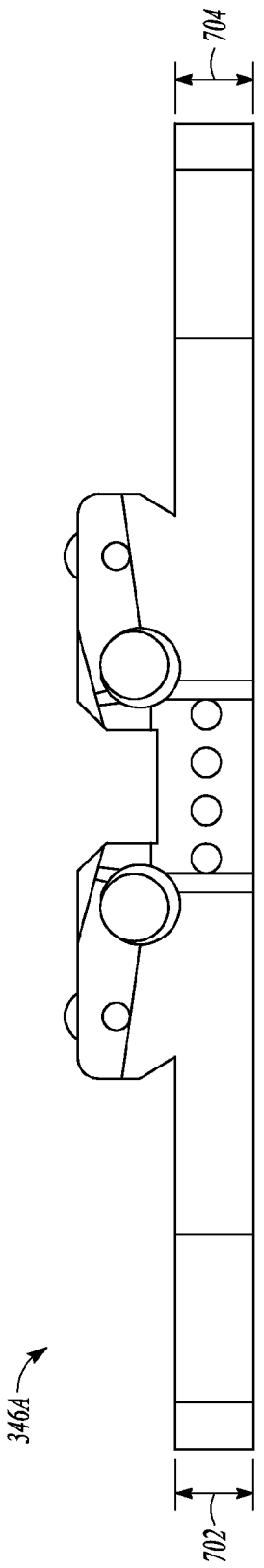


FIG. 7

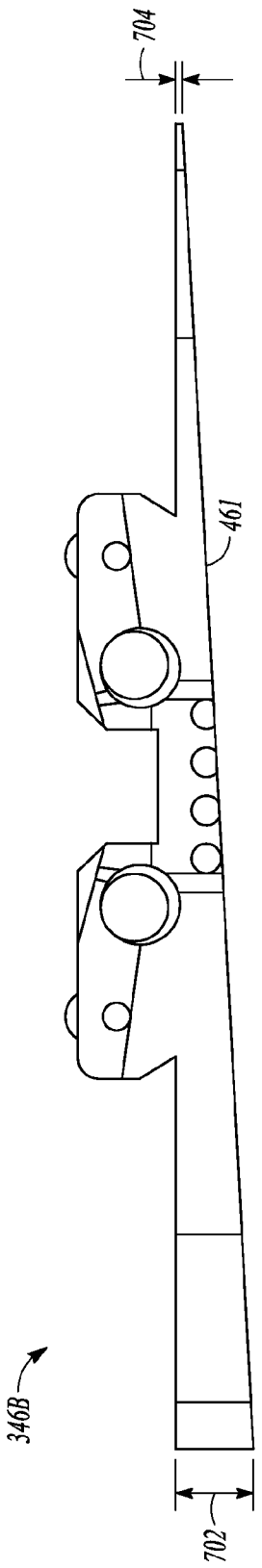


FIG. 8

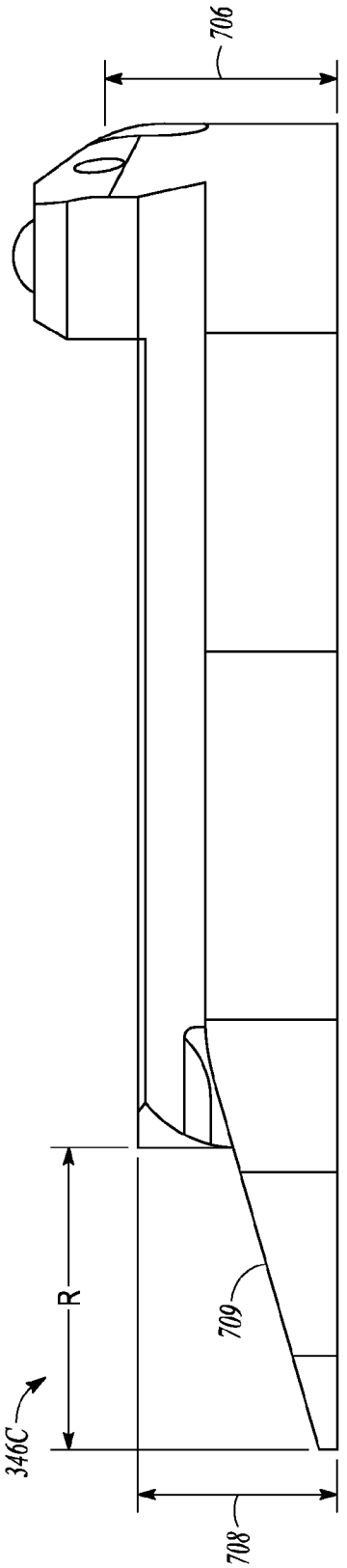


FIG. 9

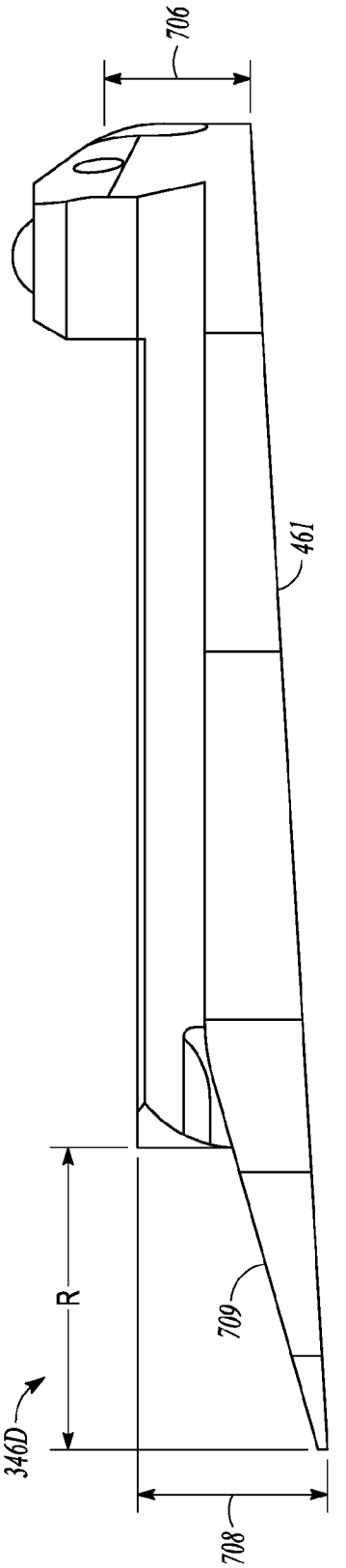


FIG. 10

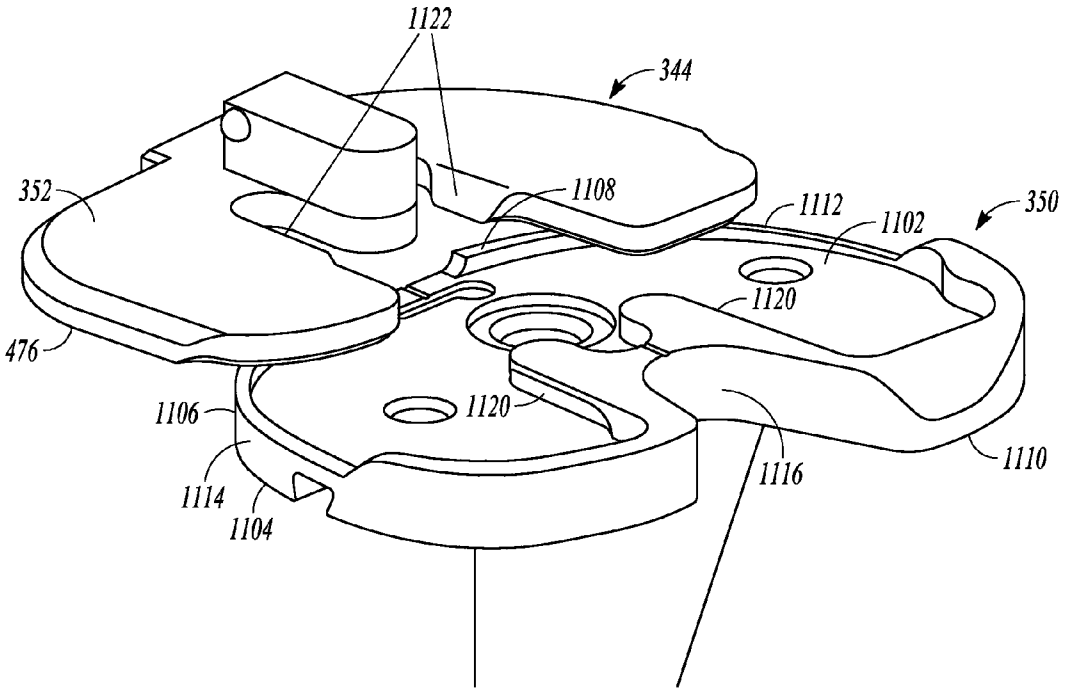
1122
344
352
1108
1112
1102
350
1120
476
1106
1120
1110
1116
1114
1104

*FIG. 11*

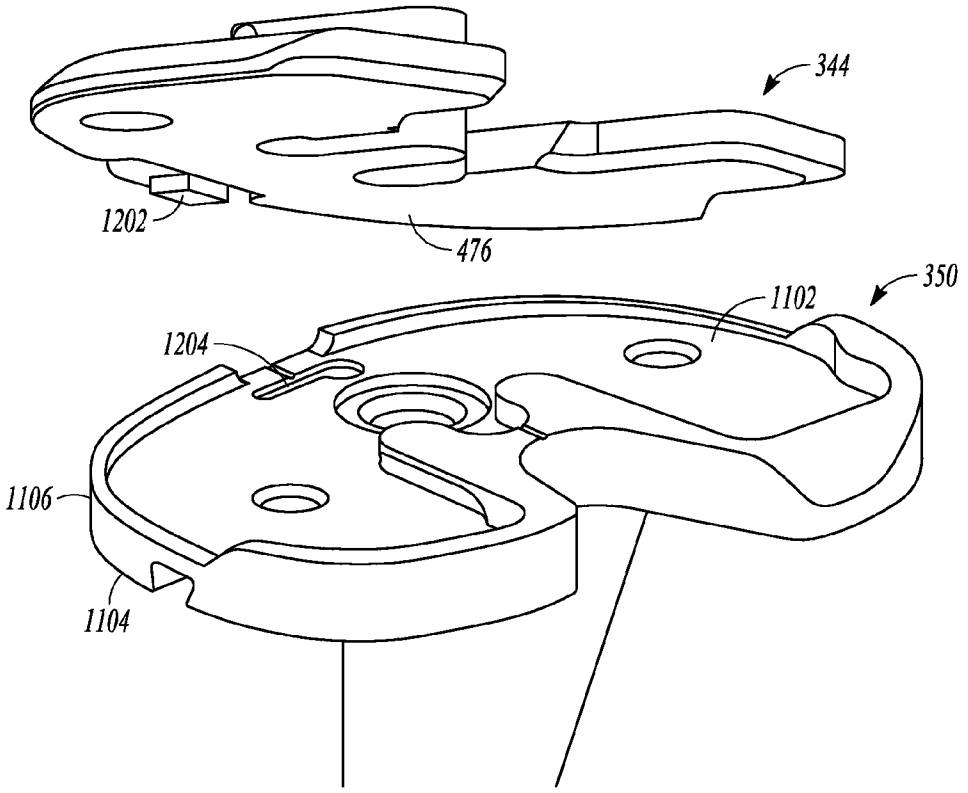


FIG. 12A

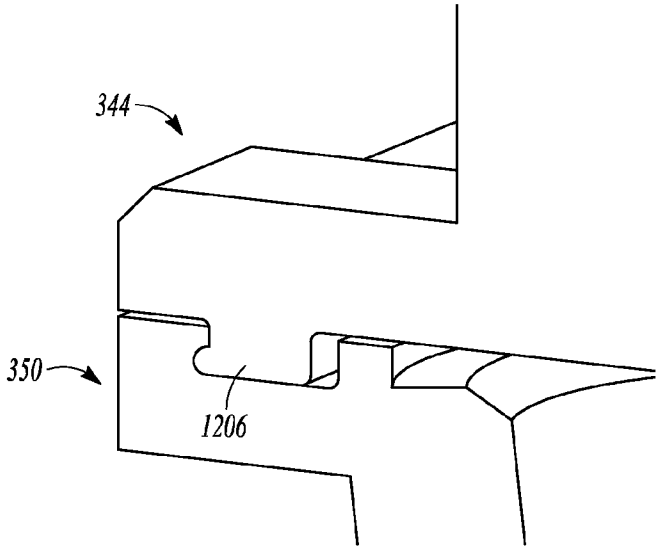


FIG. 12B

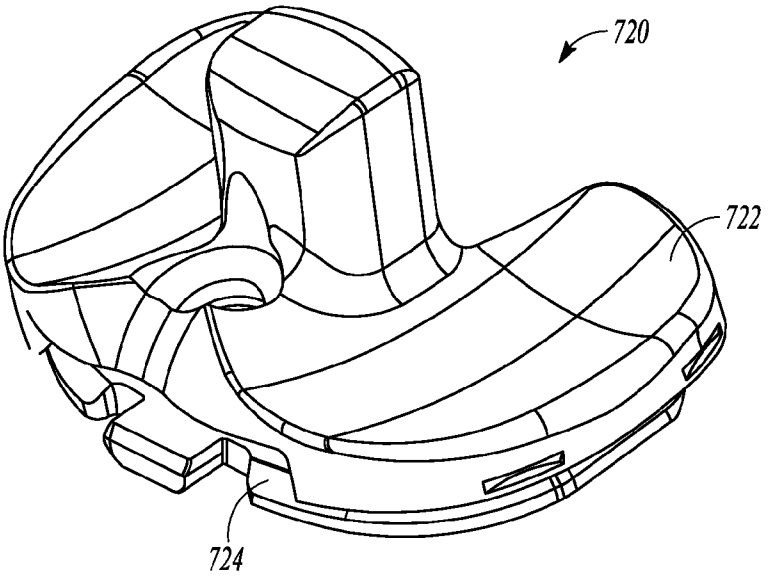


FIG. 13

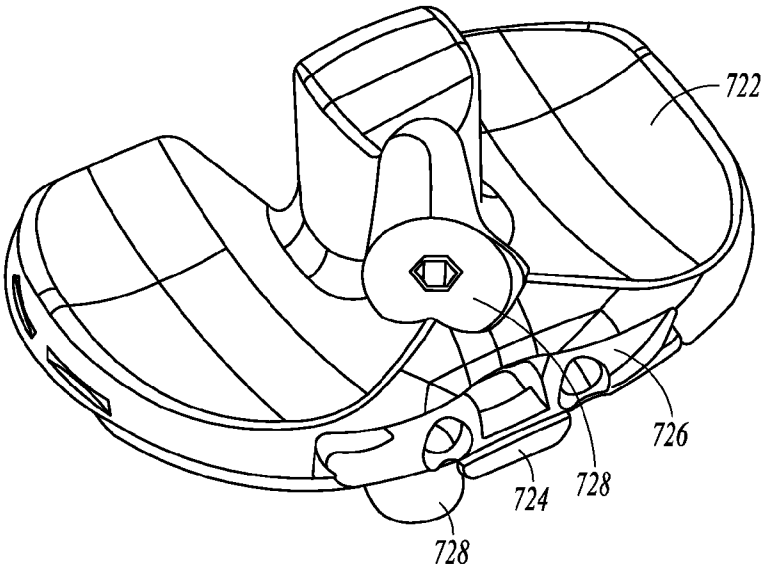


FIG. 14

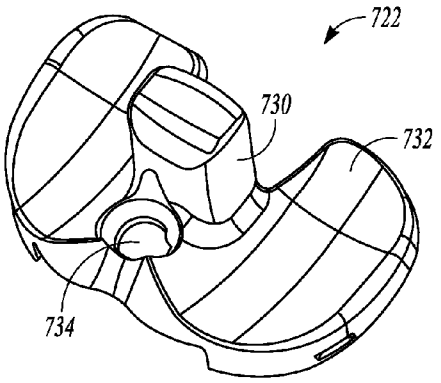


FIG. 15A

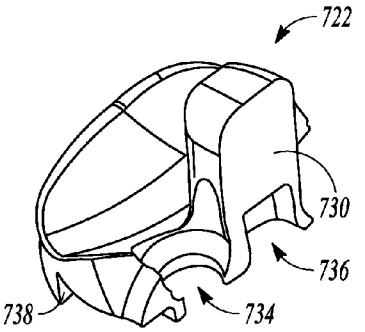


FIG. 15B

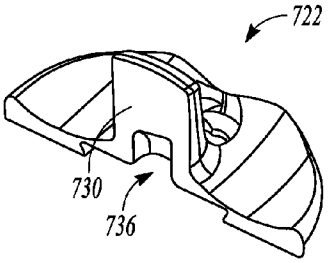


FIG. 15C

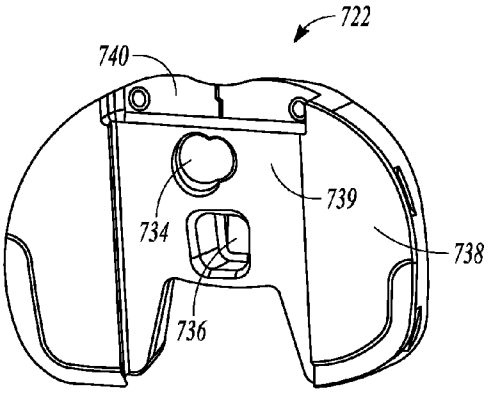


FIG. 15D

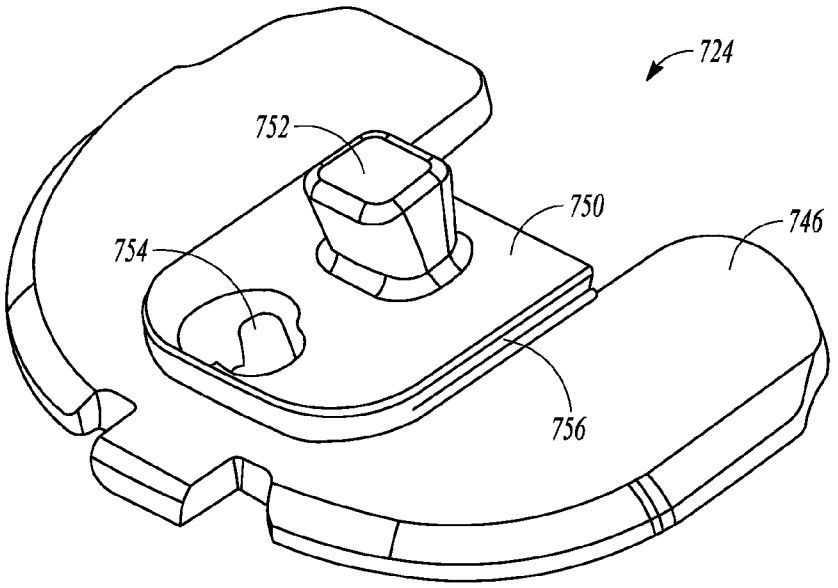


FIG. 16A

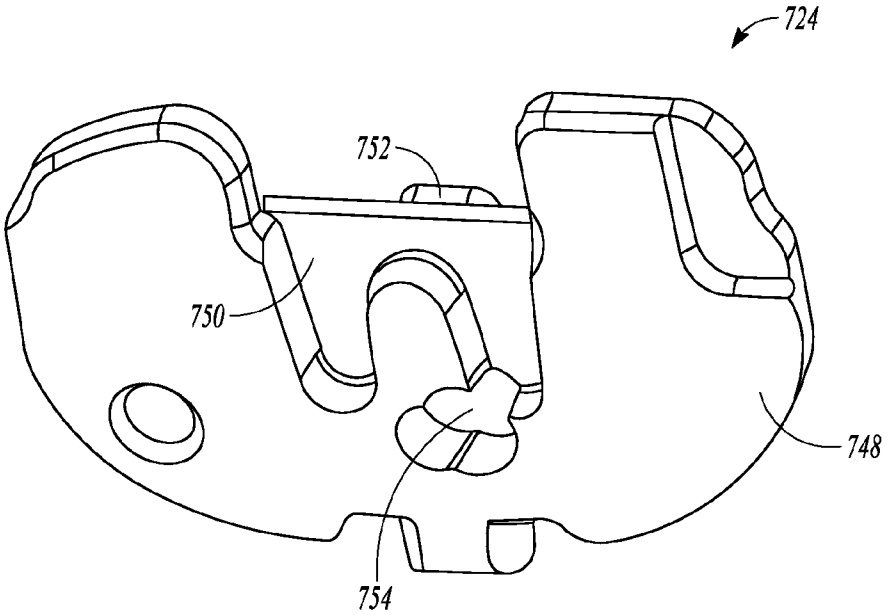


FIG. 16B

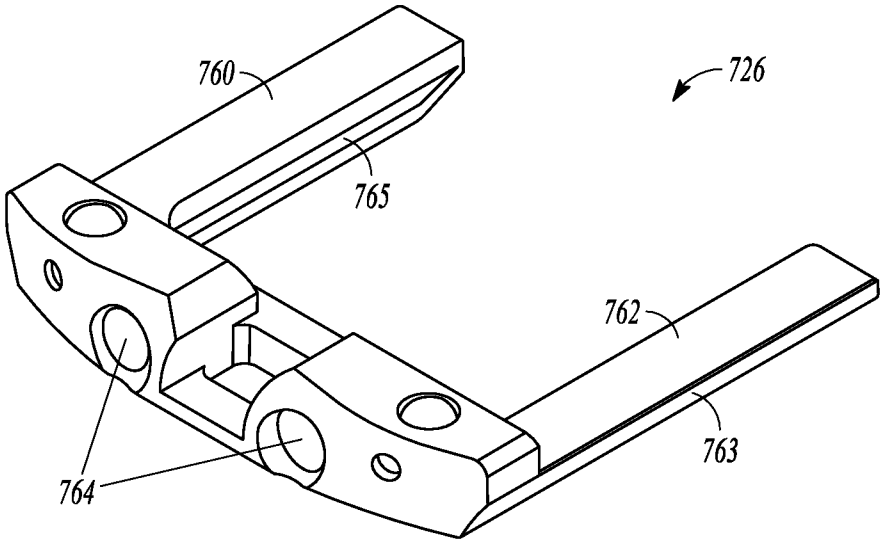


FIG. 17

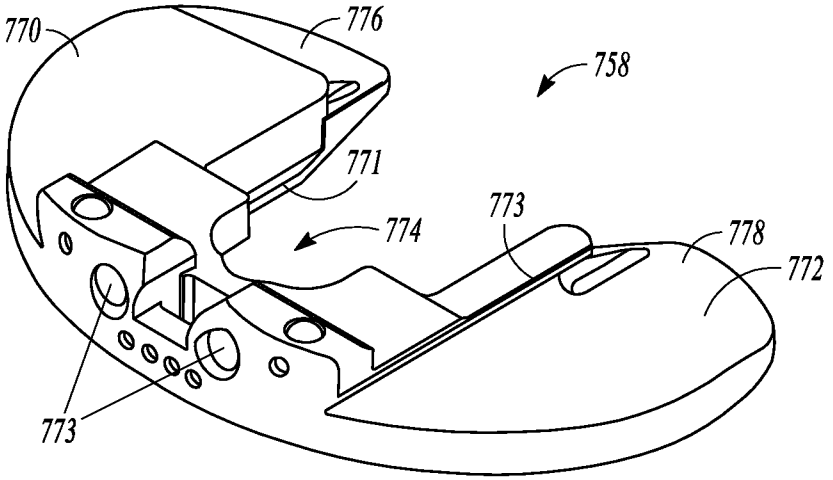


FIG. 18

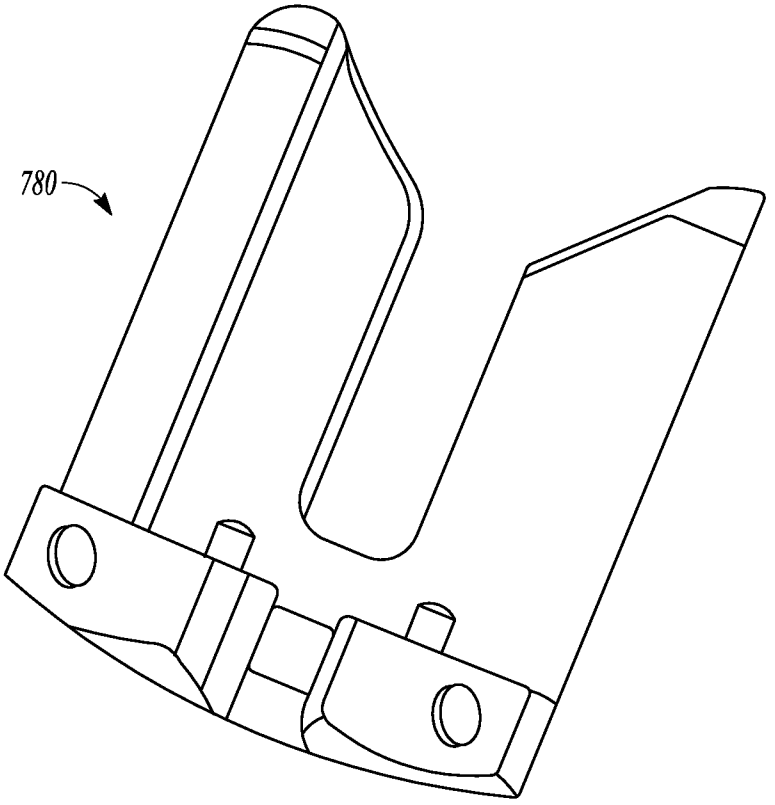


*FIG. 19*

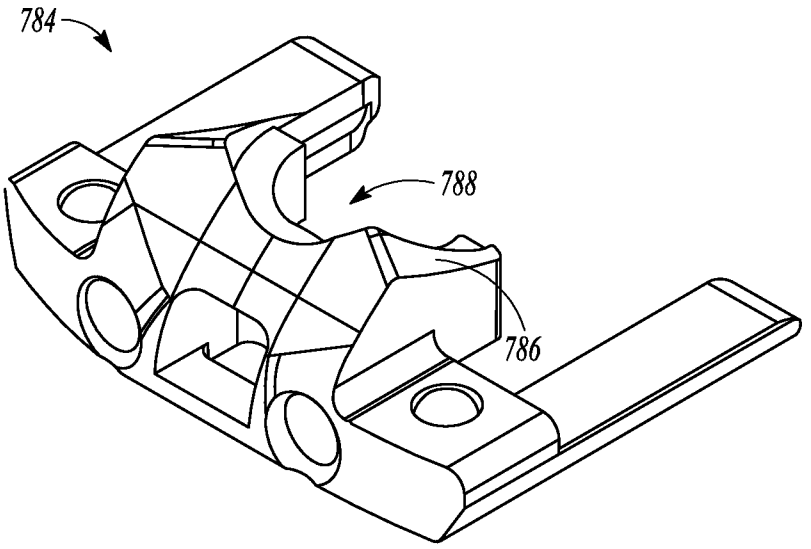


FIG. 20

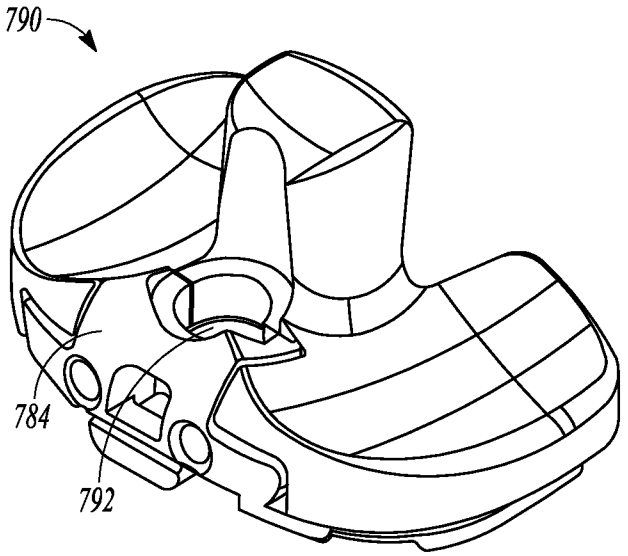


FIG. 21

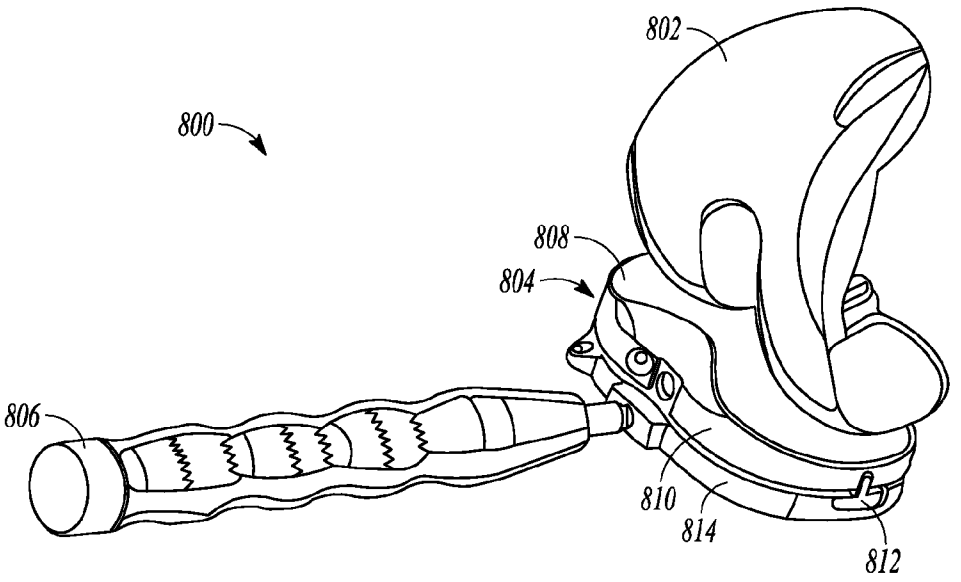


*FIG. 22*

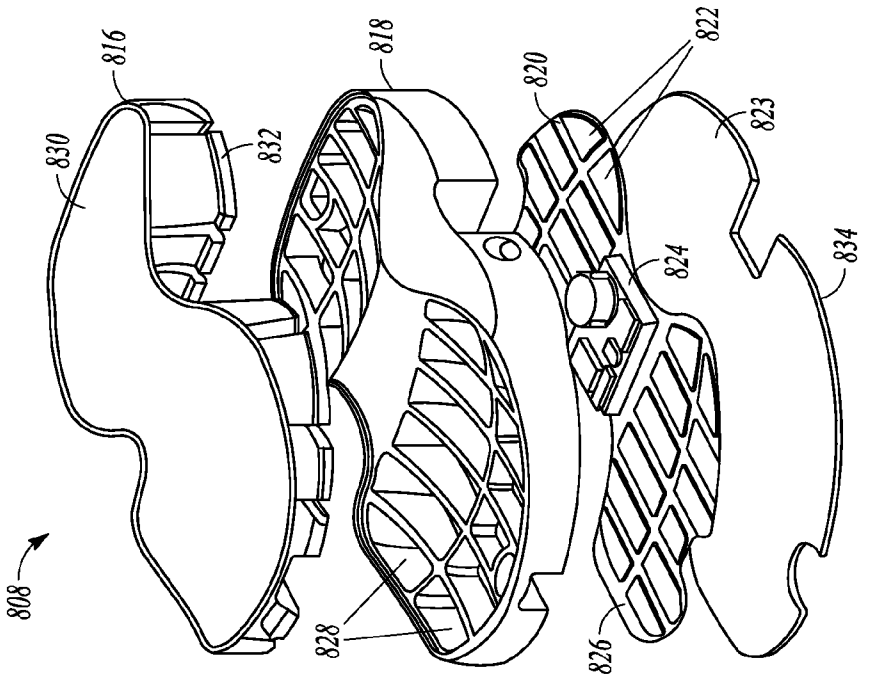


FIG. 23B

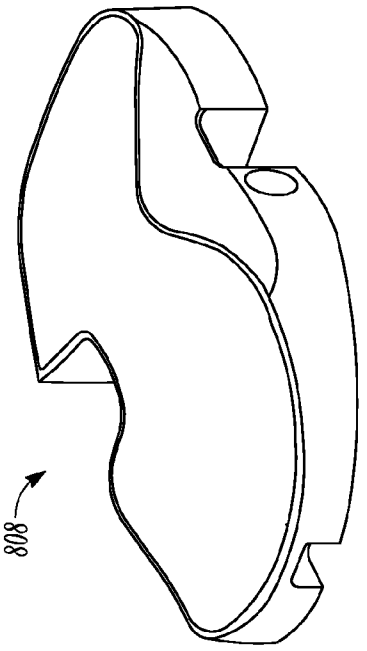


FIG. 23A

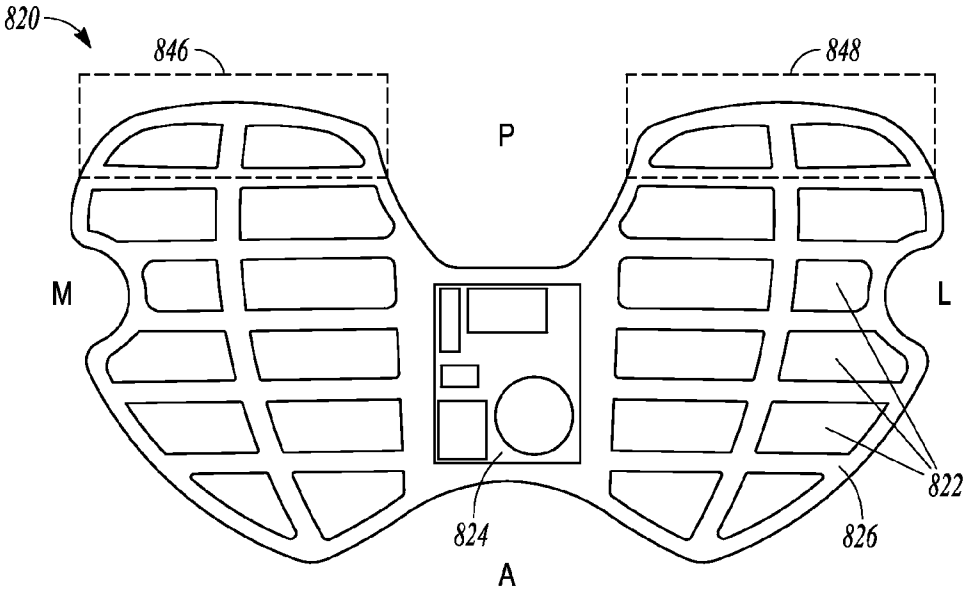


FIG. 24

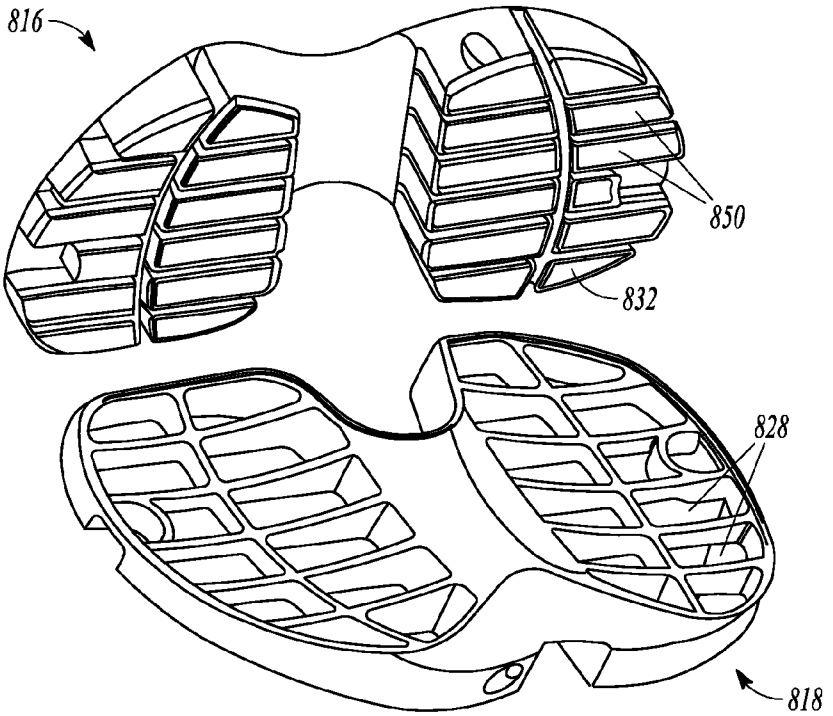


FIG. 25

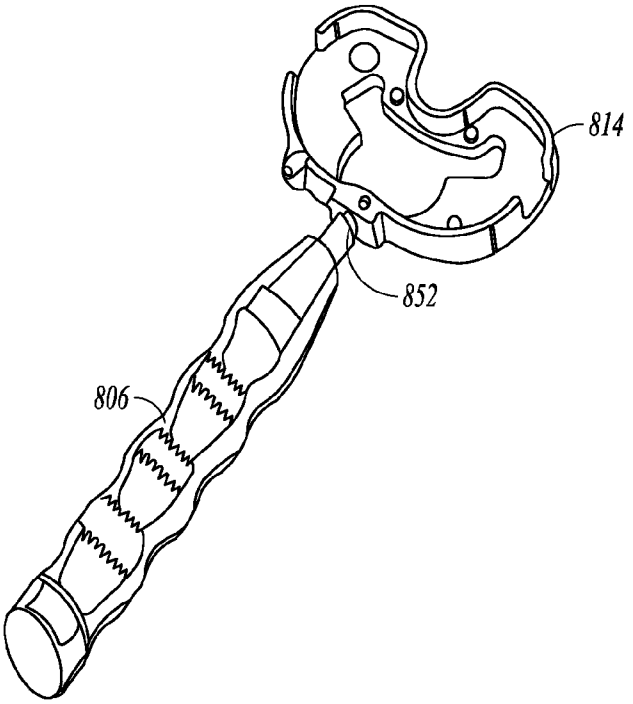


FIG. 26A

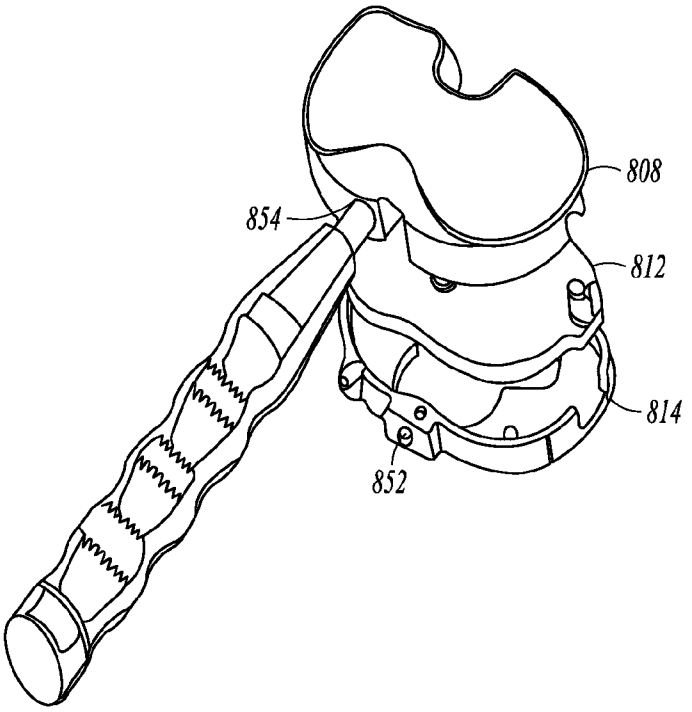


FIG. 26B

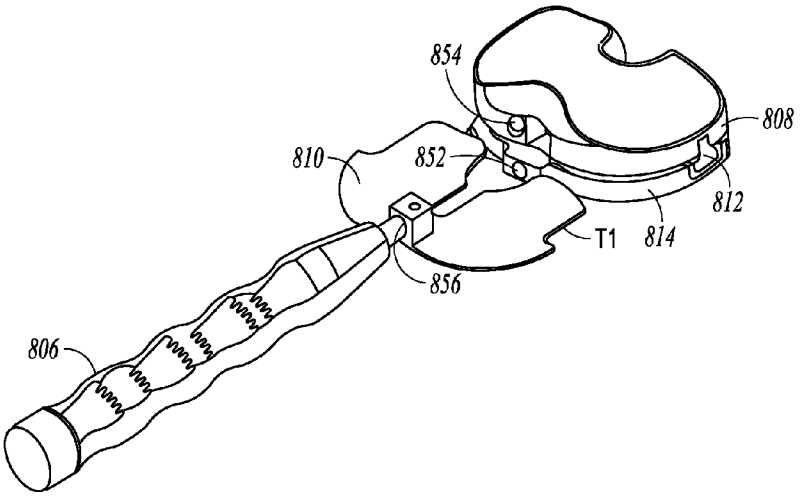


FIG. 27A

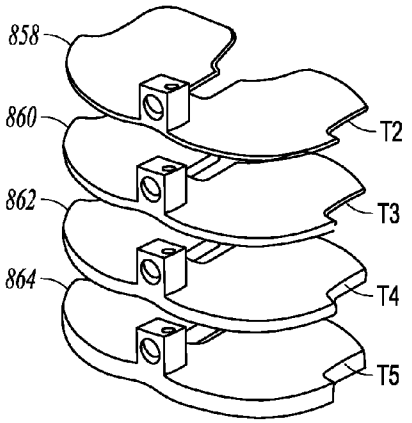


FIG. 27B

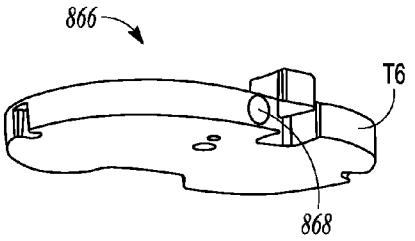


FIG. 27C

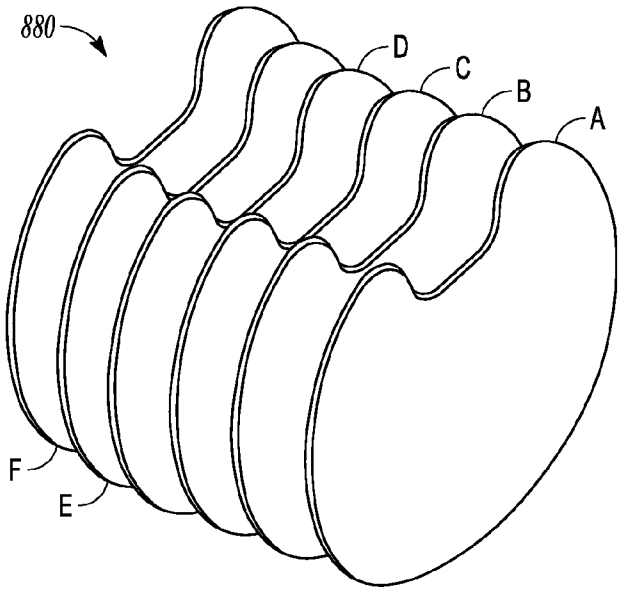


FIG. 28

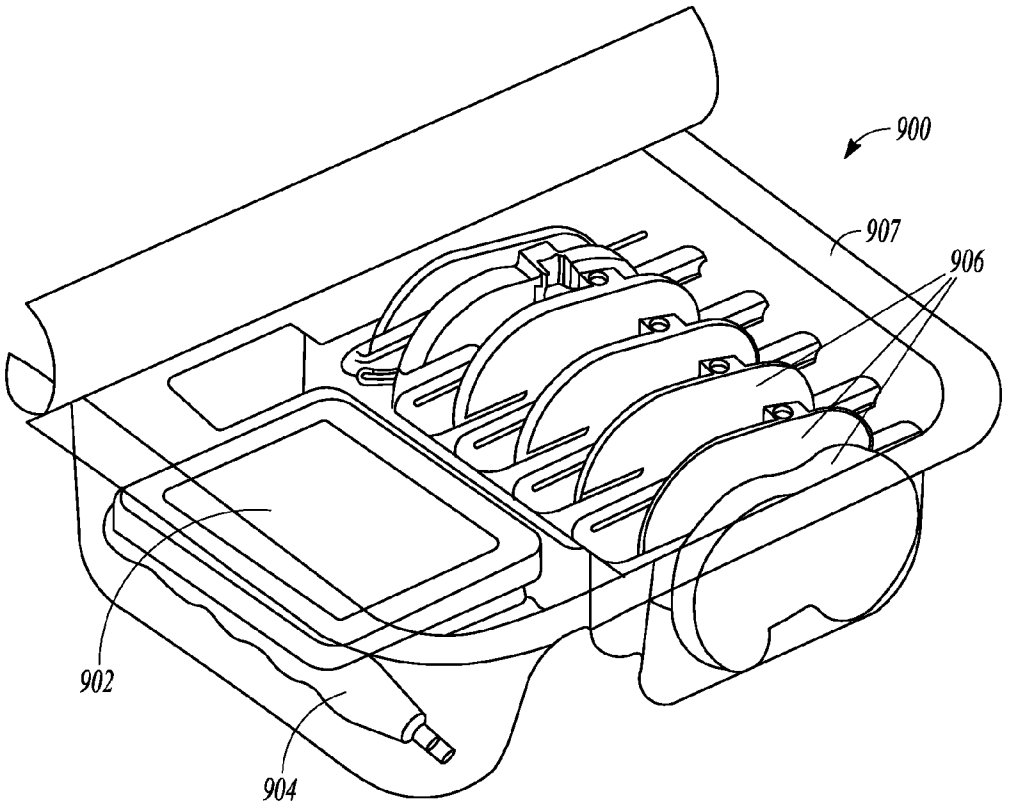


FIG. 29

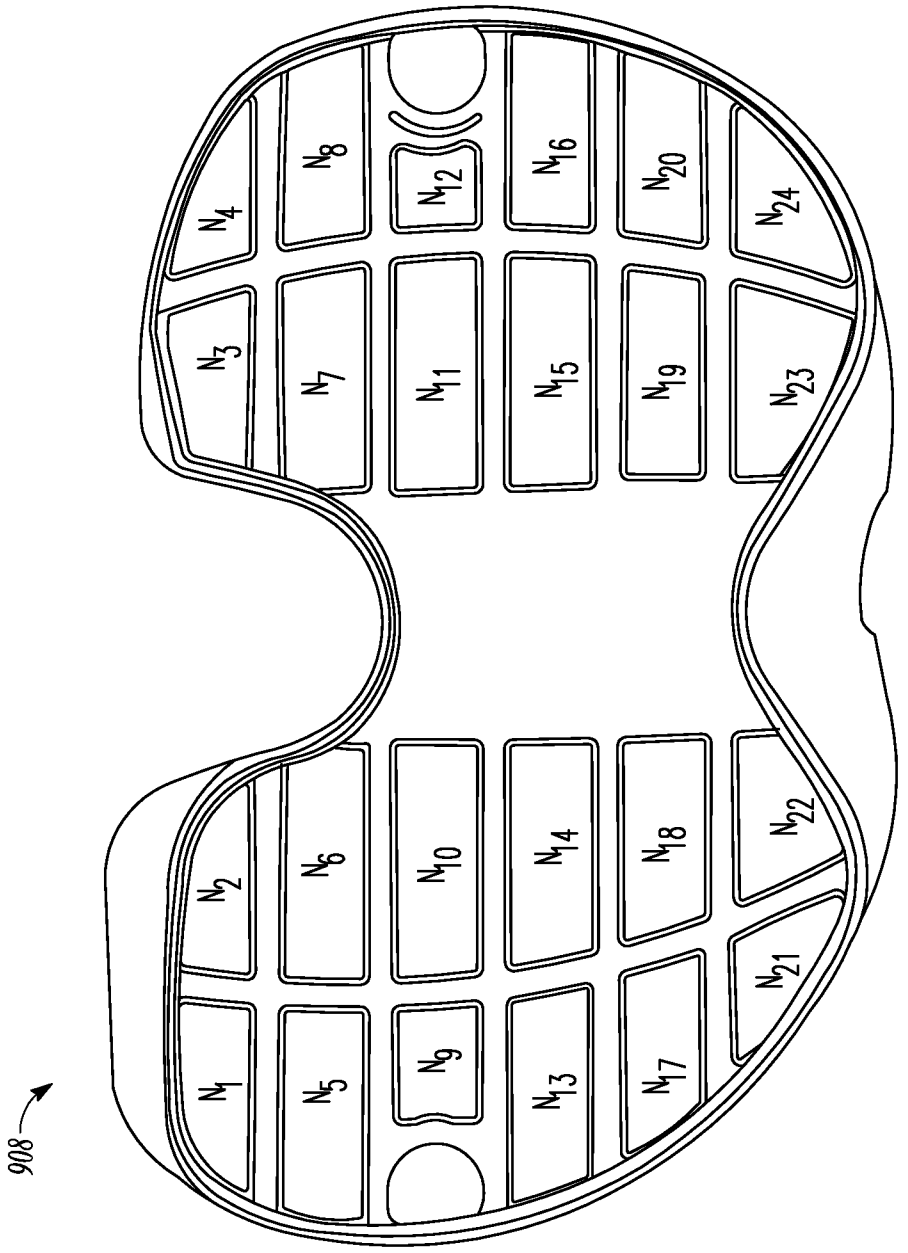
908
N1
N2
N3
N4
N5
N6
N7
N8
N9
N10
N11
N12
N13
N14
N15
N16
N17
N18
N19
N20
N21
N22
N23
N24

FIG. 30

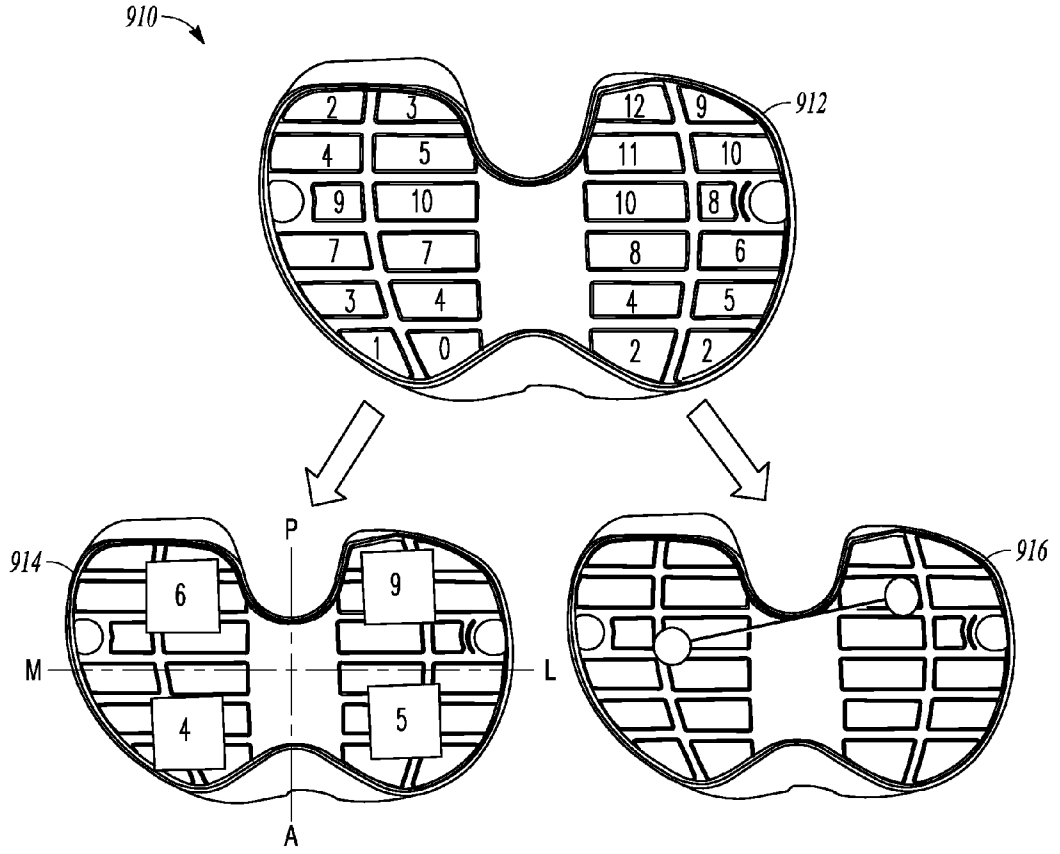


*FIG. 31*

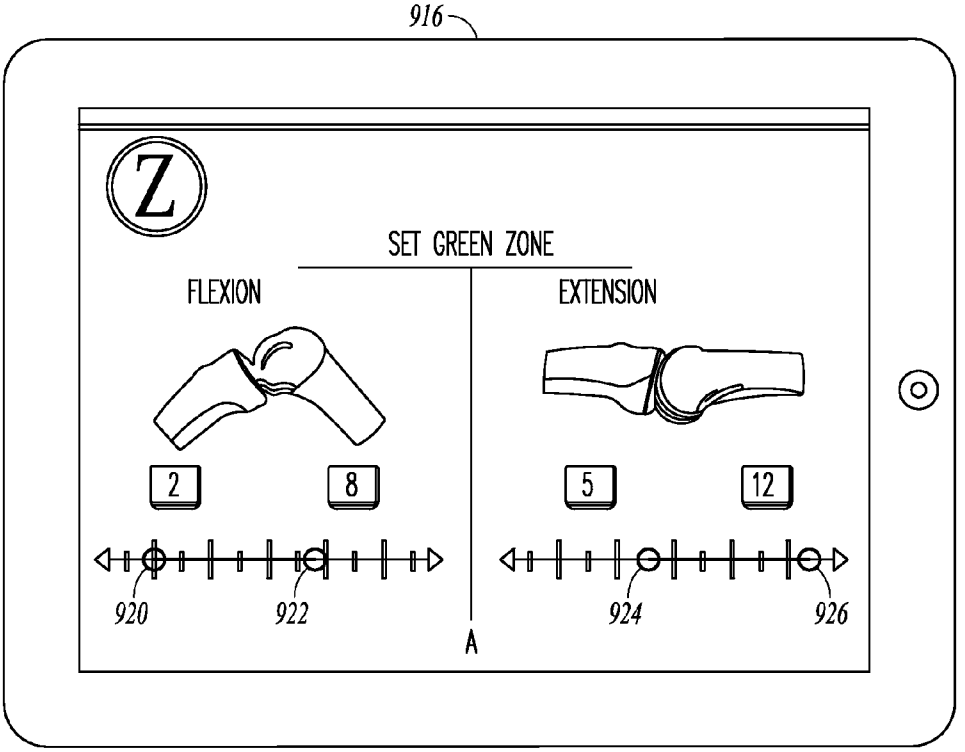
916
Z
SET GREEN ZONE
FLEXION
EXTENSION
2
8
5
12
920
922
924
926
A

FIG. 32

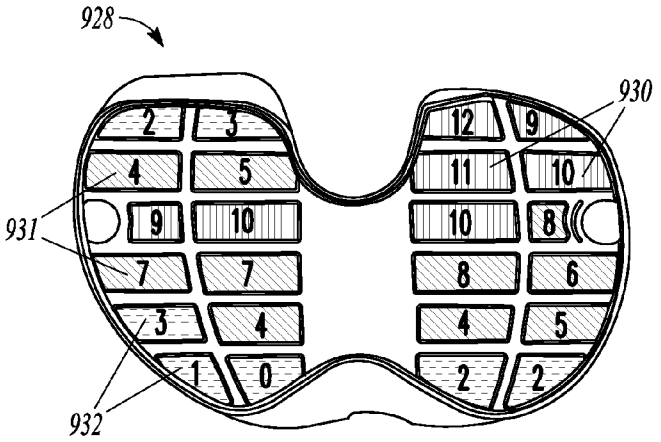
928
930
931
932
2
3
4
5
9
10
7
7
3
4
1
0
12
9
11
10
10
8
8
6
4
5
2
2

FIG. 33

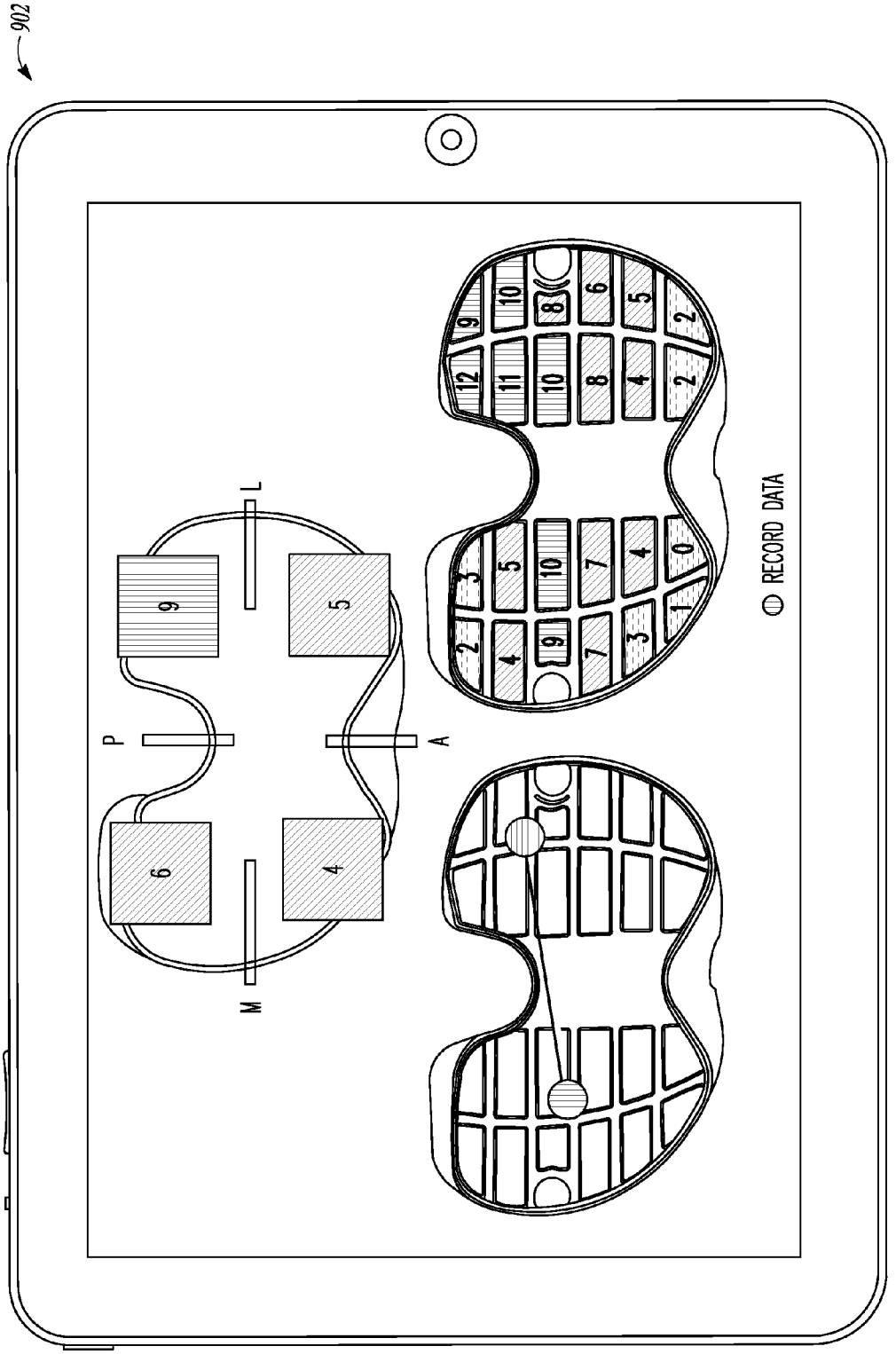


FIG. 34

# TIBIAL PROSTHESIS SYSTEMS, KITS, AND METHODS

## CLAIM OF PRIORITY

**[0001]** This application claims the benefit of priority under 35 U.S.C. §119(e) of Claypool et al., U.S. Provisional Patent Application Ser. No. 61/618,376, entitled "TIBIAL PROSTHESIS SYSTEMS, KITS, AND METHODS," filed on Mar. 30, 2012, and also claims the benefit of priority under 35 U.S.C. §119(e) of Claypool et al., U.S. Provisional Patent Application Ser. No. 61/740,268, entitled "TIBIAL PROSTHESIS SYSTEMS, KITS, AND METHODS," filed on Dec. 20, 2012, each of which is herein incorporated by reference in its entirety.

## TECHNICAL FIELD

**[0002]** This patent document pertains generally to tibial prosthesis systems, kits, and methods.

## BACKGROUND

**[0003]** Provisional knee prosthesis systems, including a plurality of provisional components, can be positioned on a distal end of a femur or a proximal end of a tibia to allow a surgeon to test and appropriately fit a permanent knee prosthesis system within a patient. During surgery, the surgeon can remove and replace a provisional component having a first uniform thickness with a provisional component having a second uniform thickness to arrive at an appropriate configuration of the permanent knee prosthesis system.

## Overview

**[0004]** This patent document pertains generally to provisional tibial prosthesis systems, kits, and methods, including one or more provisional tibial components that can collectively be used to replicate permanent (or final) tibial components or mimic bone cuts believed to be necessary during a surgical procedure. It is believed that the provisional tibial components can also be designed for, or find use as, permanent tibial components. Thus, while this disclosure relates to provisional uses of the present tibial prosthesis systems, kits, and methods, it should be appreciated that such subject matter can also find use in permanent applications. When used provisionally, the tibial prosthesis systems, kits, and methods disclosed herein can assist in determining a proper bone cut angle to be made (e.g., to a tibia or a femur) or a size, shape, or other configuration of a permanent tibial prosthesis system that is designed to replace all or a portion of a knee joint. The present tibial prosthesis systems, kits, and methods can be used in conjunction with one or both of a permanent tibial prosthesis system, as disclosed in U.S. Provisional Patent Application Ser. No. 61/381,800, filed on Sep. 10, 2010 and entitled "TIBIAL PROSTHESIS FACILITATING ROTATIONAL ALIGNMENT," or a shim handling instrument and user-interface, as disclosed in U.S. Provisional Patent Application Ser. No. 61/424,222, filed on Dec. 17, 2010 and entitled "USER INTERFACE RELATED TO A SURGICAL PROVISIONAL," the entire disclosures of each of which are hereby expressly incorporated by reference herein.

**[0005]** The present inventors recognize, among other things, that existing provisional systems, kits, and methods fail to provide a surgeon with insight of knee joint kinematics if an angled bone cut (e.g., a bone cut that is not parallel to a joint line of the knee) is made to a proximal end of the tibia or a distal end of the femur. The present inventors further recognize that existing provisional systems, kits, and methods require the stacking of a high number of provisional components to arrive at an appropriate configuration of the permanent tibial prosthesis system or fail to provide sensed force or pressure data providing a real-time indication of provisional knee joint balance.

**[0006]** The present shim components, which can include one or both of a medial edge having a different height than a lateral edge or an anterior edge having a different height than a posterior edge, advantageously provide a surgeon with knee joint kinematic insight regarding an angled bone cut before the cut is made and can reduce the number of provisional components needed for permanent system sizing. The present shim components can provide the surgeon with the ability to appropriately configure the tibia, the femur, and/or the permanent tibial prosthesis system to counterbalance a deficiency (e.g., varus, valgus, anterior/posterior, or posterior/anterior sloping) of the knee joint before making certain angled bone cuts and using a reduced number of provisional components.

**[0007]** A tibial prosthesis system can include a provisional bearing component, a bearing support component, such as a base or plate component, and the provisional shim component. The shim component can be inserted between an inferior surface of the bearing component and a superior surface of the bearing support component. The insertion of the shim component provides spacing adjustment between the bearing and bearing support components. A sensor can be coupled to or integrated with the bearing, bearing support, or shim components for real-time knee joint balance testing.

**[0008]** To further describe the methods disclosed herein, a non-limiting list of examples is provided here:

**[0009]** In Example 1, a method can comprise inserting a first tibial shim component between a tibial bearing component and a tibial base or a tibial plate component in an anterior/posterior direction. The first tibial shim component can include one or both of a medial edge having a different height than a lateral edge or an anterior edge having a different height than a posterior edge. The method can further comprise testing one or more of a stability, a force balance, or a range of motion of a knee joint in which the first tibial shim component is inserted. If the testing result is not satisfactory, the method can include removing the first tibial shim component, and inserting a second tibial shim component between the tibial bearing component and the tibial base or tibial plate component in the anterior/posterior direction. The second tibial shim component can include at least one of a medial edge, a lateral edge, an anterior edge, or a posterior edge having a different height than the first tibial shim component

**[0010]** In Example 2, the method of Example 1 can optionally further comprise testing one or more of the stability, the force balance, or the range of motion of the knee joint with the second tibial shim component positioned between the tibial bearing component and the tibial base or plate component.

**[0011]** In Example 3, the method of any one or any combination of Examples 1 or 2 can optionally be configured such that the tibial bearing component and the tibial base component are coupled to each other, and wherein removing the first tibial shim component includes preserving a coupling arrangement between the tibial bearing component and the tibial base component.

**[0012]** In Example 4, the method of any one or any combination of Examples 1-3 can optionally be configured such that

removing the first tibial shim component includes attaching a shim handling instrument with a front end portion of the first tibial shim component.

**[0013]** In Example 5, the method of Example 4 can optionally be configured such that inserting the second tibial shim component includes attaching the shim handling instrument with a front end portion of the second tibial shim component.

**[0014]** In Example 6, the method of any one or any combination of Examples 1-5 can optionally be configured such that testing one or more of the stability, the force balancing, or the range of motion of the knee joint includes sensing at least one of a pressure, force, or position of the knee joint using one or more sensors.

**[0015]** In Example 7, the method of any one or any combination of Examples 1-5 can optionally be configured such that testing one or more of the stability, the force balancing, or the range of motion of the knee joint includes sensing at least one of a pressure, force, or position of the knee joint using a plurality of sensors coupled to or integrated with the bearing component.

**[0016]** In Example 8, the method of Example 7 can optionally be configured such that using the plurality of sensors coupled to or integrated with the bearing component includes allowing a plurality of forces or pressures to be communicated through a plurality of apertures included in a bearing component frame and sensed by the plurality of sensors, and wherein the sensors are positioned distally of the frame, having a size or shape corresponding to a size or shape of the apertures.

**[0017]** In Example 9, the method of any one or any combination of Examples 1-8 can optionally further comprise removing the first or second tibial shim component and, prior to implanting a permanent tibial implant system, cutting an angled surface, corresponding to a proximal/distal height profile of the removed shim, on a proximal end portion of a tibia or a distal end portion of a femur.

**[0018]** In Example 10, a method of performing a surgical procedure on a portion of a knee joint can comprise implanting a prosthesis on a tibia, including implanting, in a distal to proximal direction, a base component, a plurality of bearing component sensors, a bearing component frame having a plurality of apertures corresponding in a size or shape to the sensors, and a bearing component top portion having a superior articulating surface. The method can further comprise inserting a first tibial shim component between the plurality of bearing component sensors and the base component in an anterior/posterior direction, and testing a force balance on at least a portion of the knee joint using the plurality of bearing component sensors. When the force balance is not satisfactory, the method can comprise removing the first tibial shim component, and inserting a second tibial shim component between the plurality of bearing component sensors and the base component in the anterior/posterior direction.

**[0019]** In Example 11, the method of Example 10 can optionally further comprise selecting the first and second tibial shim components from a set of different-sized tibial shim components, at least one of the tibial shim components including one or both of a medial edge having a different height than a lateral edge or an anterior edge having a different height than a posterior edge.

**[0020]** In Example 12, the method of any one or any combination of Examples 10 or 11 can optionally further comprise re-testing the force balance on at least a portion of the knee joint after inserting the second tibial shim component.

**[0021]** In Example 13, the method of Example 12 can optionally further comprise repeating the steps of removing a tibial shim component, inserting a different tibial shim component, and testing the force balance on a least a portion of the knee joint, until the force balance is indicative of balance on at least a portion of the knee joint.

**[0022]** In Example 14, the method of any one or any combination of Examples 10-13 can optionally be configured such that the plurality of bearing component sensors is positioned on a plate disposed between the bearing component frame and a bearing component bottom portion, and wherein the sensors occupy a substantial portion of the plate such that the sensors align with a substantial portion of the superior articulating surface of the bearing component top portion.

**[0023]** In Example 15, the method of any one or any combination of Examples 10-14 can optionally be configured such that implanting the prosthesis on the tibia includes implanting a spacer between the plurality of bearing component sensors and the base component. The method can further comprise removing the spacer from the prosthesis prior to inserting the first tibial shim component between the plurality of bearing component sensors and the base component.

**[0024]** In Example 16, the method of any one or any combination of Examples 10-15 can optionally further comprise inserting a third tibial shim component between the plurality of bearing component sensors and the base component such that the second and third tibial shim components occupy a space between the plurality of bearing component sensors and the base component.

**[0025]** In Example 17, a method of determining force balance of a knee joint can comprise implanting a prosthesis on a tibia, including implanting, in a distal to proximal direction, a base component, a plurality of bearing component sensors, a bearing component frame having a plurality of apertures corresponding in a size or shape to the sensors, and a bearing component top portion. The method can further comprise analyzing a first set of force or pressure data from the plurality of bearing component sensors. When the first set of force or pressure data is not satisfactory, the method can comprise inserting a first tibial shim component between the plurality of bearing component sensors and the base component in an anterior/posterior direction and analyzing a second set of force or pressure data from the plurality of bearing component sensors.

**[0026]** In Example 18, the method of Example 17 can optionally be configured such that implanting the prosthesis on the tibia includes implanting a spacer between the plurality of bearing component sensors and the base component. The method can further comprise removing the spacer from the prosthesis prior to inserting the first tibial shim component between the plurality of bearing component sensors and the base component.

**[0027]** In Example 19, the method of any one or any combination of Examples 17 or 18 can optionally further comprise removing the first tibial shim component, inserting a second tibial shim component between the plurality of bearing component sensors and the base component in the anterior/posterior direction, and analyzing a third set of force or pressure data from the plurality of bearing component sensors. These method steps can be performed when the second set of force or pressure data is not satisfactory.

**[0028]** In Example 20, the method of Example 19 can optionally further comprise repeating the steps of removing,

inserting, and analyzing until the force or pressure data is indicative of balance of the knee joint.

**[0029]** In Example 21, the method of Example 19 can optionally further comprise inserting a third tibial shim component such that the second and third tibial shim components occupy a space between the plurality of bearing component sensors and the base component.

**[0030]** In Example 22, the method of any one or any combination of Examples 17-21 can optionally be configured such that at least one of analyzing the first set of force or pressure data and analyzing the second set of force or pressure data is performed by a computing device that receives the force data from the plurality of bearing component sensors.

**[0031]** In Example 23, the method of any one or any combination of Examples 17-22 can optionally further comprise displaying at least one of the first and second sets of force or pressure data through a user interface having a representation of an area of the prosthesis.

**[0032]** In Example 24, the method of any one or any combination of Examples 17-23 can optionally further comprise selecting the first and second tibial shim components from a set of different sized tibial shim components, at least one of the tibial shim components including one or both of a medial edge having a different height than a lateral edge or an anterior edge having a different height than a posterior edge.

**[0033]** In Example 25, the method of any one or any combination of Examples 1-24 can optionally be configured such that all steps or elements recited are available to use or select from.

**[0034]** These and other examples and features of the present methods will be set forth in part in the following Detailed Description. This Overview is intended to provide non-limiting examples of the present subject matter—it is not intended to provide an exclusive or exhaustive explanation. The Detailed Description below is included to provide further information about the present tibial prosthesis systems, kits, and methods.

## BRIEF DESCRIPTION OF THE DRAWINGS

**[0035]** In the drawings, like numerals can be used to describe similar elements throughout the several views. Like numerals having different letter suffixes can be used to represent different views or features of similar elements. The drawings illustrate generally, by way of example, but not by way of limitation, various embodiments discussed in the present document.

**[0036]** FIGS. **1-2** illustrate knee joint structures providing suitable environments in which a tibial prosthesis system, as constructed in accordance with at least one embodiment, can be used.

**[0037]** FIG. **3** illustrates a partially resected knee joint structure and a tibial prosthesis system, as constructed in accordance with at least one embodiment.

**[0038]** FIGS. **4**A-**4**B respectively illustrate assembled and component views of a tibial prosthesis system, as constructed in accordance with at least one embodiment.

**[0039]** FIG. **5** illustrates a method of using a tibial prosthesis system, as constructed in accordance with at least one embodiment.

**[0040]** FIG. **6**A-**6**B respectively illustrate assembled and component views of a tibial prosthesis system and a shim handling instrument, as constructed in accordance with at least one embodiment.

**[0041]** FIGS. **7-8** illustrate front views of a shim component of a tibial prosthesis system, as constructed in accordance with at least two embodiments.

**[0042]** FIGS. **9-10** illustrate side views of a shim component of a tibial prosthesis system, as constructed in accordance with at least two embodiments.

**[0043]** FIGS. **11-12**B illustrate exploded views of a base component and a plate component of a tibial prosthesis system, as constructed in accordance with at least one embodiment.

**[0044]** FIGS. **13-14** illustrate perspective views of portions of a tibial prosthesis system, as constructed in accordance with at least one embodiment.

**[0045]** FIGS. **15**A-**15**D illustrate various perspective views of a bearing component, as constructed in accordance with at least one embodiment.

**[0046]** FIGS. **16**A-**16**B illustrate superior and inferior sides, respectively, of a base component, as constructed in accordance with at least one embodiment.

**[0047]** FIG. **17** illustrates a perspective view of a spacer component, as constructed in accordance with at least one embodiment.

**[0048]** FIG. **18** illustrates a perspective view of a shim component, as constructed in accordance with at least one embodiment.

**[0049]** FIGS. **19-20** illustrate perspective views of a spacer component, as constructed in accordance with at least one embodiment.

**[0050]** FIG. **21** illustrates a perspective view of a spacer component positioned in a tibial prosthesis system, as constructed in accordance with at least one embodiment.

**[0051]** FIG. **22** illustrates a perspective view of a provisional or trial prosthesis system, as constructed in accordance with at least one embodiment.

**[0052]** FIGS. **23**A-**23**B illustrate assembled and component views, respectively, of a bearing component, as constructed in accordance with at least one embodiment.

**[0053]** FIG. **24** illustrates a top surface of a bearing component sensor plate, as constructed in accordance with at least one embodiment.

**[0054]** FIG. **25** illustrates a frame and a non-articulating side of a bearing component top portion, as constructed in accordance with at least one embodiment.

**[0055]** FIGS. **26**A-**27**C illustrate one or more components of a provisional tibial prosthesis system in use with a handling instrument, as constructed in accordance with at least one embodiment.

**[0056]** FIG. **28** illustrates a plurality of templates for determining a proper tibial tray size prior to selecting a tibial prosthesis system, as constructed in accordance with at least one embodiment.

**[0057]** FIG. **29** illustrates an example of a kit that can include a user interface, a handling instrument, and a plurality of components of a trial prosthesis system, as constructed in accordance with at least one embodiment.

**[0058]** FIGS. **30-34** illustrate digital images that can be generated and displayed on a user interface, as constructed in accordance with at least one embodiment.

## DETAILED DESCRIPTION

**[0059]** The present inventors recognize that it can be desirable to provide surgeons with knee joint kinematic insight before certain bone cuts are made (e.g., to a tibia or a femur) and with the ability to quickly create a configuration appro-

priate for a permanent tibial prosthesis system using provisional components. The present tibial prosthesis systems, kits, and methods can include a provisional bearing component, a bearing support component, such as a base component or a plate component, and a provisional shim component. The shim component can include one or both of a medial edge having a different height than a lateral edge or an anterior edge having a different height than a posterior edge and can be inserted between the bearing component and the bearing support component. The differing height profile of the shim component can provide a surgeon with knee joint kinematic insight regarding an angled bone cut before the cut is made and can allow for sizing of an appropriate permanent prosthesis component configuration using a reduced number of provisional components. A sensor can be coupled to or integrated with the bearing, bearing support, or shim components for real-time knee joint balance testing.

**[0060]** To better understand knee joint replacement procedures, it can be helpful to understand the relationship of bones and bone cuts that can be made to orient various provisional and permanent prosthesis components within a knee joint. FIGS. **1** and **2** illustrate several features of knee joint structures and orientations. In FIG. **1**, a frontal view of a lower limb **102**, including a femur **104** and a tibia **106**, is shown to illustrate various lower limb axes. The femur **104** has an anatomic axis **108** that coincides generally with its intramedullary canal. The femur **104** also has a mechanical axis **110**, or load axis, running from the center of a femoral head **112** to the center of a knee joint **114**. The angle **116** extending between these two axes varies among the patient population, but is generally on the order of between 5-7 degrees, inclusive. Like the femur **104**, the tibia **106** also has an anatomic axis coinciding generally with its intramedullary canal. The mechanical axis **118** of the tibia **106** runs from the center of the knee joint **114** to the center of an ankle region **120** and is generally collinear with its anatomic axis.

**[0061]** A joint line **122**, about which the knee joint **114** flexes, is approximately parallel to a line through medial and lateral femoral condyles **124** and to a tibial plateau **126**. Although illustrated as perpendicular in FIG. **1**, the joint line **122** can extend at a varus or valgus angle relative to the mechanical axes **110** and **118** of the femur **104** and tibia **106**, respectively. Normally, during a partial or total knee replacement procedure, portions of a distal end of the femur **104** or a proximal end of the tibia **106** are resected to be parallel or approximately parallel to the joint line **122**, and thus perpendicular to the mechanical axes **110** and **118**, as indicated at **128** and **130**, respectively.

**[0062]** FIG. **2** illustrates a closer view of the knee joint **114** and its coordinate system, in which a medial/lateral axis **202** corresponds approximately to the joint line **122** (FIG. **1**), a proximal/distal axis **204** corresponds approximately to the mechanical axes **110** and **118** (FIG. **1**), and an anterior/posterior axis **206** is approximately normal to the other two axes. Position along each of these axes can be depicted by arrows, which can represent the medial/lateral **208**, anterior/posterior **210**, and proximal/distal **212** positioning of inserted prosthesis components. Rotation about each of these axes can also be depicted by arrows. Rotation about the proximal/distal axis **204** can correspond anatomically to external rotation of a femoral component, while rotation about the anterior/posterior axis **206** and medial/lateral axis **202** can correspond to extension plane slope and varus/valgus angle of a component, respectively. Depending on a position of the proximal tibial cut **130** (FIG. **1**) made, a varus/valgus angle **214**, extension plane angle **216**, external rotation **218**, or joint extension gap can be affected. Similarly, a position of the distal femoral cut **128** (FIG. **1**) can affect the location of the joint line **122**, the extension gap, the varus/valgus angle **214**, or the extension plane angle **216**.

**[0063]** FIG. **3** illustrates a partially resected knee joint **314** structure, including a proximal tibial cut **130**, and a provisional tibial prosthesis system **340**. The provisional tibial prosthesis system **340** can include a bearing component **342**, a base component **344**, a plate component **350**, and a shim component **346** insertable between an inferior surface **348** of the bearing component **342** and a superior surface **352** of the base component **344**. The shim component **346** can include one or both of a medial edge having a different height than a lateral edge or an anterior edge having a different height than a posterior edge and can be used as a height varying spacer block between the bearing component **342** and the base component **344**. The spacing of the bearing component **342** from the base component **344**, for example, is adjustable to allow for representation of a variety of different sized angled bone cuts that can be made to a femur **104** or a tibia **106** or permanent tibial prosthesis systems. The shim component **346** can be inserted between the inferior surface **348** of the bearing component **342** and the superior surface **352** of the base component **344** using a shim handling instrument **354**. The shim handling instrument **354** can include a release means **356** to disengage the shim component **346** after its insertion between the bearing **342** and base **344** components.

**[0064]** FIGS. **4**A and **4**B respectively illustrate assembled and component views of a provisional tibial prosthesis system **340**. The provisional tibial prosthesis system **340**, or components thereof, can be used to mimic geometry of one or both of an angle bone cut to be made or a permanent tibial prosthesis system. For example, the assembled tibial prosthesis system **340** of FIG. **4**A, illustrates a bearing component **342**, a shim component **346**, a base component **344**, and a plate component **350**. A stem component **358** can be attached to the plate component **350** and used to secure the plate component **350** to a resected tibia **106** (FIG. **3**).

**[0065]** Each component of the provisional tibial prosthesis system **340** includes an associated height. A shim component height **347** can be combined with a bearing component height **343** and a base component height **345**, for example, to represent a desired height of a permanent tibial prosthesis system. A plurality of different or varying sized shims **346** can be slidably inserted between the bearing component **342** and a bearing support component, such as the base component **344**, in an anterior/posterior **210** direction. Advantageously, the different or varying sized shims **346** can be inserted and removed without removing the bearing component **342** or the bearing support component from within a knee joint **314** (FIG. **3**). Instead, all that is needed is a distraction of the knee joint **314** in an amount equal or approximately equal to the height profile of a particular shim component **346**. In one example, the shim handling instrument **354** can be used to engage one or more handling alignment voids of a shim component **346** to assist in inserting and removing the shim component **346** between the bearing component **342** and the bearing support component **344**. The one or more handling alignment voids of the shim component **346** can be consistent over the broad range of different sized shim components for universal compatibility with the shim handling instrument **354**.

**[0066]** Each component of the provisional tibial prosthesis system **340** can include a structure defined by various surfaces, voids, or cavities. As shown in FIG. **4**B, the bearing component **342**, for example, can include an inferior surface **348**, an opposing superior surface **460**, and a peripheral wall **462** extending from the inferior surface **348** to the superior surface **460**. The bearing component **342** can further include an anterior side **464**, a posterior side **466**, a lateral side **468**, and a medial side **470**. The superior surface **460** can be configured to articulate with natural or prosthetic condyles of a distal femur and can include a bearing lateral articular surface portion and a bearing medial articular surface portion, with a central tibial eminence **472** disposed between the articular surface portions. The inferior surface **348** can include a bearing cavity and one or more bearing nub cavities. The bearing cavity can extend from the inferior surface **348** toward the superior surface **460** and can be sized and shaped to accept a projection of the base component **344**. The bearing nub cavities can extend on opposing sides of the bearing cavity and can each be sized and shaped to receive a nub located on the projection of the base component **344**.

**[0067]** A posterior cruciate ligament (PCL) cutout **474** can be disposed at the posterior side **466** between the articular surfaces. The PCL cutout **474** can be sized and positioned to correspond with a PCL of the knee joint **314**. In the example of FIG. **4**B, the bearing component **342** is illustrated as a cruciate retaining bearing component, although it is contemplated that other tibial bearing components can be used. Bearing components that cooperate to form a posterior stabilized prosthesis, as shown in the example of FIG. **4**A, or a knee prosthesis having an intermediate level of constraint between a posterior stabilized and cruciate retaining prosthesis are within the scope of the present disclosure. The bearing component **342** can also be made available in a variety of shapes and sizes to accommodate a variety of patient knee joints.

**[0068]** The base component **344** can include an inferior surface **476**, an opposing superior surface **352**, and a peripheral wall **480** extending from the inferior surface **476** to the superior surface **352**. The base component **344** can further include an anterior side **481**, a posterior side **482**, a lateral side **484**, and a medial side **486**. A projection **488**, including one or more nubs **490**, can extend from the superior surface **352**. The projection **488** and nubs **490** can be configured to be received within, and couple to, the bearing and bearing nub cavities of the bearing component **342**. The base component **344** can include one or more of a W-shaped notch **492** at the posterior side **482**, an undercut portion to mate with a raised perimeter of the plate component **350**, a medial side groove, and a lateral side groove.

**[0069]** The bearing component **342** and the base component **344** can be coupled to or engaged with each other. In an example, the bearing component **342** can be positioned atop of the base component **344** and the projection **488**, including the one or more nubs **490**, of the base component **344** can be positioned within the bearing and bearing nub cavities of the bearing component **342**. The base component **344** can be secured to the bearing component **342** in a medial/lateral direction **208** (FIG. **2**) when the projection **488** is received with the bearing cavity and can be secured in an anterior/posterior direction **210** (FIG. **2**) when the one or more nubs **490** are received with respective nub cavities. The walls of the bearing cavity can provide a physical barrier to inhibit significant relative movement between the base component **344** and the bearing component **342** in the medial/lateral direction **208**. Similarly, the walls of the bearing nub cavities can provide a physical barrier to inhibit significant relative movement between the base component **344** and the bearing component **342** in the anterior/posterior direction **210**. When the bearing component **342** is positioned atop the base component **344**, and before insertion of the shim component **346**, the bearing component can **342** be movable relative to the base component **344** in a proximal/distal direction **212** (FIG. **2**).

**[0070]** As further discussed with respect to and illustrated in FIGS. **11** and **12**, below, the base component **344** can be secured to the base plate **350**, such that the base component **344** is located between the bearing component **342** and the base plate **350**.

**[0071]** Turning again to FIG. **4**B, the shim component **346** can include an inferior surface **461**, an opposing superior surface **463**, and a peripheral wall **465** extending from the inferior surface **461** to the superior surface **463**. The peripheral wall **465** can define an exterior profile of the shim component **346**. In an example, the exterior profile of the shim component **346** can substantially match an exterior profile of the base component **344** or the plate component **350**. The shim component **346** can further include an anterior side **467**, a posterior side **469**, a lateral side **471**, and a medial side **473**.

**[0072]** The superior surface **463** can include one or more rails **475** and one or more handling alignment voids **477**. The one or more rails **475** can be configured to slidably engage one or more slots on the inferior surface **348** of the bearing component **342**. The rails **475** can extend from the anterior side **467** toward the posterior side **469**, such in an orientation parallel to the anterior/posterior direction **210**. The rails **475** can include lead-in edges **479** to facilitate alignment and engagement with the slots of the bearing component **342**. The rail **475**/slot engagement between the shim component **346** and the bearing component **342** can inhibit lift-off the bearing component **342** from the shim component **346**. The one or more handling alignment voids **477** can be configured to engage with an interface of a shim handling instrument, such as is shown in FIG. **6**A.

**[0073]** A set of different sized shim components **346** can be provided in a kit to allow for varying levels of adjustment of the provisional tibial prosthesis system **340** and insight into knee joint kinematics if certain bone cuts are made to a tibia **106** (FIG. **1**) or a femur **104** (FIG. **1**). Particularly, the distance between the bearing component **342** and the base component **344** can be increased or decreased by inserting and removing different sized shim components **346**. At least one of the shim components **346** can include one or both of a medial edge having a different height than a lateral edge or an anterior edge having a different height than a posterior edge. The medial edge height and the lateral edge height can be sized such that the inferior surface **461** of the shim component **346** includes a medial to lateral angle of between +3 degrees and −3 degrees, inclusive. The anterior edge height and the posterior edge height can be sized such that the inferior surface **461** of the shim component **346** includes an anterior to posterior angle of between +3 degrees and −3 degrees, inclusive. Two or more shim components **346** from the set can, in an example, be stacked to achieve desirable knee joint kinematics. It is believed that the set of different sized shim components **346** can include any desired number of shims having a constant or differing height.

**[0074]** FIG. **5** illustrates a method **500** of using a provisional tibial prosthesis system to determine a proper angle of a bone cut to be made, if any, and an appropriate size (e.g.,

height) for a permanent tibial prosthesis system in a knee joint. At **502**, a surgeon or other caregiver selects a particular size of the provisional tibial prosthesis system believed to be suitable for a patient. The provisional tibial prosthesis system can include a bearing member, a bearing support component, comprising one or both of a base component or a plate component, and a shim component. The plate component can include an inferior surface configured to contact a resected portion of a tibia and an opposing superior surface. The base component can include a base component height and be attachable to the plate component. The bearing component can include a bearing component height, and the shim component can include a shim component height. The shim component can be configured to be slidably received between the bearing component and the bearing support component in an anterior/posterior direction.

**[0075]** At **504**, a proximal end portion of the patient's tibia is resected to be parallel or approximately parallel to a joint line of a knee. The tibia can be resected using standard surgical techniques to provide a substantially flat surface for receipt of the inferior, bone contacting surface of the plate component. Once the proximal end portion of the tibia is resected, the plate component can be implanted and secured to the resected tibia, at **506**.

**[0076]** At **508**, one or more of the selected bearing, shim, and base components can be positioned atop the plate component. In an example, the selected bearing and base components can initially be positioned atop the plate component, and subsequently, the selected shim component can be inserted between the bearing and base components in the anterior/posterior direction. The inserted shim component can include one or both of a medial edge having a different height than a lateral edge or an anterior edge having a different height than a posterior edge to counterbalance a deficiency (e.g., varus, valgus, anterior/posterior, or posterior/anterior sloping) of the knee joint.

**[0077]** At **510**, the surgeon can perform one or more of a stability, a force balance, or a range of motion test of the knee joint to determine whether proper joint kinematics are present. The testing can include sensing at least one of a pressure, force, or position of the knee joint using a sensor coupled to or integrated with a provisional component. If the surgeon determines that proper knee joint kinematics is present, sizing procedures can begin, at **516**. The sizing procedures can include determining whether an angled bone cut to the tibia and/or femur (e.g., a bone cut that is not parallel to the joint line of the knee) is needed, at **517**, such as to counterbalance the knee joint deficiency, or determine the height of the provisional tibial prosthesis system. The angled bone cut to the tibia and/or femur can correspond to a height profile of the selected shim. The sizing procedures can use a sizing guide including alignment pins that fit in respective exterior voids in one or more provisional components to properly align the sizing guide to the components. Once properly aligned, a locking component of the sizing guide can slide along a shim ramp, for example, and, when the locking component slides past the shim ramp, a biasing force on the locking component can cause the locking component to travel downward and engage a backside of shim ramp to lock the sizing guide to the shim component.

**[0078]** At **512**, if the provisional tibial prosthesis system is determined to not be properly sized due to improper joint kinematics being present, an additional or different sized shim component can be selected. At **514**, the originally selected shim component can be removed from between the bearing component and the bearing support component and/or the newly selected shim component can be inserted between the bearing component and the bearing support component. The newly selected shim component can include at least one of a medial edge, a lateral edge, an anterior edge, or a posterior edge having a different height than the originally selected shim component. Insertion and removal of the shim components can be achieved in the anterior/posterior direction using a shim handling instrument. The bearing and bearing support components can be configured and coupled to each other in such a way that removal or insertion of shim components does not disturb the coupling arrangement.

**[0079]** With the newly selected shim component in place, the surgeon can again perform one or more of a stability, a force balance, or a range of motion test of the knee joint, at **510**, to determine whether proper joint kinematics are present. Shim component replacement or stacking can be repeated, using a variety of different or similarly sized shims and a variety of different numbers of shims, until the surgeon determines that proper joint kinematics are present.

**[0080]** Finally, at **518**, a permanent tibial prosthesis system can be selected and implanted. The permanent tibial prosthesis system can include a height that corresponds to the height of one or more provisional tibial prosthesis system components.

**[0081]** FIGS. **6**A and **6**B respectively illustrate assembled and component views of a provisional tibial prosthesis system **340** and a shim handling instrument **354** attachable to a shim component **346** of the system. As discussed with respect to FIG. **5**, above, the shim handling instrument **354** can be used for insertion or removal of different sized shim components **346**. The shim handling instrument **354** can include, among other things, a handle body **602**, a user-engageable end **604**, an opposing attachment end **606**, one or more alignment pins **608**, release means **356** (e.g., a release button), and an engageable tooth **610**. The one or more alignment pins **608** can be positioned on each side of the engageable tooth **610**. The alignment pins **608** can be configured to fit into respective handling alignment voids **477** positioned near an anterior side **467** of the shim component **346**.

**[0082]** When the shim handling instrument **354** and the shim component **346** are properly aligned, the engageable tooth **610** can be configured to slide along a shim ramp **612**. When the engageable tooth **610** slides along the shim ramp **612**, a biasing force on the engageable tooth **610** can cause the tooth to travel downward and engage a backside of the shim ramp **612**, thereby locking the shim handling instrument **354** to the shim component **346**. The biasing force can be exerted on the engageable tooth **610** by a tension spring.

**[0083]** When the shim handling instrument **354** is locked to the shim component **346**, a surgeon holding the user-engageable end **604** of the shim handling instrument **354** can insert the shim component **346** between a bearing component **342** and a bearing support component, such as one or both of a base component **344** or a plate component **350**, in an anterior/posterior direction **210** (FIG. **2**). The insertion of the shim component **346** can space the bearing component **342** from the bearing support component a distance equal to the shim component height **347** (FIG. **4**A) along a proximal/distal axis **204** (FIG. **2**). During insertion of the shim component **346**, an entry ramp **614** on a posterior side **469** of the shim component **346** can be used to urge, in a ramp-like manner, separation of the bearing component **342** and the bearing support compo-

nent. Once the shim component **346** is fully inserted between the bearing component **342** and the bearing support component, the release means **356** can be depressed to overcome the downward biasing force on the engageable tooth **610**. In this way, the engageable tooth **610** can be disengaged from the backside of the shim ramp **612** and the shim handling instrument **354** can be disengaged from the shim component **346**. In a similar manner, the shim handling instrument **354** can be used to remove the shim component **346** from between the bearing component **342** and the bearing support component.

**[0084]** Advantageously, the present provisional tibial prosthesis system **340** can be adjusted in a manner requiring a knee joint **114** (FIG. **2**) to only be distracted by a distance equal to a height profile of the shim component **346**. The shim components **346**, as shown in FIGS. **8** and **10**, can include one or both of a medial edge having a different height than a lateral edge or an anterior edge having a different height than a posterior edge. Differing height shim components **346** can advantageously provide a surgeon with joint kinematic insight regarding an angled bone cut before the cut is made, and can reduce the number of provisional components needed during surgery sizing by offering tailored separation between knee joint components. Also, the bearing component **342** and the bearing support component, such as the base component **344**, do not have to be removed from the knee joint **114** to insert and remove shim components **346**.

**[0085]** FIGS. **7** and **8** illustrate front views of at least two versions of a shim component of a provisional tibial prosthesis system. The shim component **346**A of FIG. **7** includes a medial edge height **702** that is the same or substantially the same as a lateral edge height **704**. In contrast, the shim component **346**B of FIG. **8** includes a medial edge height **702** that is different than a lateral edge height **704**. In the example shown, the medial edge height **702** is greater than the lateral edge height **704** and can be used by a surgeon to analyze possible bone cuts for a patient experiencing a varus (or bow-legged) knee joint. Alternatively, the medial edge height **702** can be less than the lateral edge height **704** and can be used by a surgeon to analyze possible bone cuts for a patient experiencing a valgus (for knock-kneed) joint. Due to a height difference between the medial and lateral edges, an inferior surface **461** of the shim component can include a medial to lateral angle of between +3 degrees and −3 degrees, inclusive. The wedge-like shape of the shim component **346**B can be used by the surgeon to assess kinematics of a knee joint if a particular bone cut is made. In this way, the wedge-like shape can be used as a feedback mechanism.

**[0086]** In some examples, the medial edge height **702** or the lateral edge height **704** can provide between 10 mm and 20 mm, inclusive, of spacing adjustment between a bearing component **342** (FIG. **4**A) and a bearing support component, such as a base component **344** (FIG. **4**A) or a plate component **350** (FIG. **4**A). In some examples, the medial edge height **702** or the lateral edge height **704** can provide between 10 mm and 14 mm, inclusive, of spacing adjustment and an additional 0 mm to 6 mm of spacing adjustment can be provided by different sizes of the bearing support component.

**[0087]** FIGS. **9** and **10** illustrate side views of at least two versions of a shim component of a tibial prosthesis system. The shim component **346**C of FIG. **9** includes an anterior edge height **706** that is the same or substantially the same as a posterior edge height **708**. In contrast, the shim component **346**D of FIG. **10** includes an anterior edge height **706** that is different than a posterior edge height **708**. In the example shown, the anterior edge height **706** is less than the posterior edge height **708** and can be used by a surgeon to analyze possible bone cuts for a patient experiencing an anterior to posterior sloped knee joint. Alternatively, the anterior edge height **706** can be greater than the posterior edge height **708** and can be used by a surgeon to analyze possible bone cuts for a patient experiencing a poster to anterior sloped knee joint. Due to a height difference between the anterior and posterior edges, an inferior surface **461** of the shim component can include an anterior to posterior angle of between +3 degrees and −3 degrees, inclusive. The wedge-like shape of the shim component **346**D can be used by the surgeon to assess kinematics of a knee joint if a particular bone cut is made. In this way, the wedge-like shape can be used as a feedback mechanism.

**[0088]** In some examples, the anterior edge height **706** or the posterior edge height **708** can provide between 10 mm and 20 mm, inclusive, of spacing adjustment between a bearing component **342** (FIG. **4**A) and a bearing support component, such as a base component **344** (FIG. **4**A) or a plate component **350** (FIG. **4**A). In some examples, the anterior edge height **706** or the posterior edge height **708** can provide between 10 mm and 14 mm, inclusive, of spacing adjustment and an additional 0 mm to 6 mm of spacing adjustment can be provided by different sizes of the bearing support component.

**[0089]** In some examples, the shim components **346**C and **346**D can include an entry ramp **709**, which can be similar to the entry ramp **614** described above and shown in FIG. **6**B. A ratio R from a start of the ramp **709** to a beginning of a dovetail of each of the shim components **346**C and **346**D can be used to maintain engagement of the dovetails during a shim insertion procedure.

**[0090]** FIGS. **11**, **12**A, and **12**B illustrate exploded views of a base component **344** and a plate component **350** of a tibial prosthesis system **340** (FIG. **4**A). The plate component **350** can correspond closely in size and shape with a resected proximal tibial surface. The plate component **350** can include a superior surface **1102**, an opposing bone contacting surface **1104**, and a peripheral wall **1106** extending from the bone contacting surface **1104** to the superior surface **1102**. The peripheral wall **1106** can include a raised perimeter, an anterior side **1108**, a posterior side **1110**, a medial side **1112**, and a lateral side **1114**. The plate component **350** can include a PCL cut-out **1116** disposed at the posterior side **1110** to accommodate a posterior cruciate retaining ligament of a knee joint. While the plate component **350** is part of the provisional prosthesis system disclosed herein, it can also be part of a permanent prosthesis system or a sizing system.

**[0091]** The base component **344** can be secured to the plate component **350** by positioning an inferior surface **476** of the base component **344** on the superior surface **1102** of the plate component **350**. The base component **344** can include at least one ramped surface **1122** extending between its inferior surface **476** and its superior surface **352**. The at least one ramped surface **1122** can be configured to engage one or more undercuts **1120** of the plate component **350**. A dovetail-like engagement, for example, between the at least one ramped surface **1122** and the one or more undercuts **1120** can act to inhibit medial/lateral movement between the base **344** and plate **350** components. A perimeter undercut surrounding the inferior surface **476** of the base component **344** can further mate with the raised perimeter of the plate component **350** to inhibit anterior/posterior and medial/lateral movement between the base **344** and plate **350** components. To inhibit proximal/

distal movement between the base **344** and plate **350** components, a locking projection **1202** can extend from the inferior surface **476** of the base component **344** and can be configured to engage with a locking cavity **1204** extending inferiorly from the superior surface **1102** of the plate component **350**. As shown in FIG. **12**B, the locking projection **1202** and the locking cavity **1204** can form an interference locking arrangement **1206**.

**[0092]** FIGS. **13** and **14** illustrate perspective views of portions of a tibial prosthesis system **720**, which can be similar to portions of the tibial prosthesis system **340**, described above, and used in preparation for selecting a permanent tibial prosthesis system. FIG. **13** shows a bearing component **722** and a base component **724**. The base component **724** is also referred to herein as a bearing support component. FIG. **14** shows the bearing component **722** and the base component **724**, similar to FIG. **13**, as well as a spacer component **726** and a fastener **728**. In an example, the tibial prosthesis system **720** can be used to mimic a total knee replacement procedure in which a surgeon decides that a posterior-stabilized (PS) implant is suitable for a particular patient. One or more portions of the tibial prosthesis system **720** can be used with a permanent tibial prosthesis system such as, for example, a PS implant. The fastener **728** can be used to "lock down" or secure the bearing component **722** to the base component **724**. In an example, the fastener **728** can be a lockdown screw.

**[0093]** FIGS. **15**A through **15**D illustrate various perspective views of the bearing component **722** of FIGS. **13** and **14**. FIG. **15**A shows a superior or articulating side of the bearing component **722**. FIG. **15**B shows a portion of the bearing component **722** cut along a midline in an anterior/posterior direction. FIG. **15**C shows a portion of the bearing component **722** cut along a midline in a medial/lateral direction. FIG. **15**D shows an inferior or underside of the bearing component **722**.

**[0094]** The bearing component **722** can include a post **730** extending from an articulating surface **732** and configured to engage with a femoral component, and an aperture **734** configured to receive the fastener **728** (see FIG. **14**). The post **730** can include a pocket **736** extending from an inferior side **738** of the bearing component **722**. The pocket **736** can have one or more planar walls in its cross-section geometry (e.g., trapezoidal cross-section geometry) to prevent or eliminate relative displacement between the bearing component **722** and the base component **724**.

**[0095]** The inferior side **738** of the bearing component **722** can also include an opening **740** and a bottom portion **739** to receive one or both of the spacer component **726** (see FIG. **14**) or a shim component, such as the shim component described below and illustrated in FIGS. **17**-**20**.

**[0096]** FIG. **16**A illustrates a superior side **746** of the base component **724** and FIG. **16**B illustrates an inferior side **748** of the base component **724**. The base component **724** can include a platform **750** between medial and lateral component portions. The platform **750** can include a post **752** configured to align with the pocket **736** of the bearing component **722**, and an aperture **754** configured to align with the aperture **734** of the bearing component **722** and receive the fastener **728**.

**[0097]** The base component **724** can be configured such that a plane of symmetry for the post **752** is aligned with an axis of the opening **754**. The position of the post **752** can help prevent an incorrect combination of a particular bearing component **722** and a particular base component **724**. If a particular bearing component **722** and a particular base component **724** are not intended to be used together, relative positions of the bearing component and the base component features can be offset and insertion of a shim component can be prevented. This prevention can provide an indication of incompatibility. The base component **724** can include a rail **756** extending around the platform **750** and configured to engage with a shim component.

**[0098]** FIG. **17** illustrates a perspective view of the spacer component **726**, which is illustrated in FIG. **14**. FIG. **18** illustrates a perspective view of a shim component **758**. In an example, the spacer component **726** can be available in a thinner size relative to the shim component **758**. The spacer **726** and the shim component **758** can provide a similar function of providing spacing between the bearing component **722** and the base component **724**, as similarly described above for shim component **346** (see FIGS. **4**A and **4**B). In an example, the spacer component **726** can provide a substantially similar spacing to a spacing provided between the bearing component **722** and the base component **724** when the two components **722** and **724** are assembled. The shim component **758** can be used in combination with or in lieu of the spacer component **726** to provide additional or tailored (e.g., differing medial/lateral or anterior/posterior) spacing, as described above and further described below. In an example, the spacer component **726** can be part of the tibial prosthesis system **720** as it is implanted in a knee joint. If additional or tailored spacing is needed between the bearing component **722** and the base component **724**, the spacer component **726** can optionally be removed and the shim component **758** can be inserted.

**[0099]** As shown in FIG. **14**, the spacer component **726** can be slidably inserted between the bearing component **722** and the base component **724**. The spacer component **726** can include two extensions **760** and **762** configured to extend in an anterior/posterior direction when the spacer component **726** is inserted between the bearing component **722** and the base component **744**. The extensions **760** and **762** can each engage with the inferior side **738** of the bearing component and the superior side **746** of the base component. Engagement between the extensions **760** and **762** and one or both of the bearing component **722** and the base component **724** can include a dovetail-like engagement. In an example, the extension **762** can include dovetail geometry **763** on an outer portion of the extension **762**, which can be used to engage with dovetail geometry on the bearing component **722**. In an example, engagement between the extensions **760** and **762** and the base component **724** can include rail geometry **765**, which can match and mate with the rail **756** on the base component **724**. The spacer component **726** can include one or more handling alignment voids **764**, or other coupling structures, to engage with an interface of a handling instrument, such as the handling instrument **354** (FIG. **6**A). The shim component **758** of FIG. **18** can similarly be slidably inserted between the bearing component **722** and the base component **724** and can include a first paddle **770**, a second paddle **772**, one or more handling voids **773**, as well as a cutout feature **774** between the first **770** and second **772** paddles. The cutout feature **774** can be configured to accommodate the lockdown screw **728**. Similar to the extensions **760** and **762** of the spacer component **726**, portions of the shim component **758** can engage with one or both of the bearing component **722** and the base component **744** can include a dovetail-like manner. In an example, the shim component **758** can include dovetail geometry **771**, on a top

surface, that mate with the bearing component **722** and rail geometry **773** that mate with the base component **724**, on a bottom surface. In an example, one or both of the first **770** and second **772** paddles can include an entry ramp **776** and **778**, respectively, on a top surface of the shim component **758**. The entry ramps **776** and **778** can be similar to the entry ramp **709** shown in FIGS. **9** and **10**.

**[0100]** The tibial prosthesis system **720** can be configured such that the spacer component **726** and the shim component **758** can both accommodate the lockdown screw **728** shown in FIG. **14**. The lockdown screw **728** (FIG. **14**) can be available in different sizes and a size of the screw can be selected based, in part, on a spacing between the bearing component **722** and the base component **724**. For example, if there is significant spacing between the bearing component **722** and the base component **724**, a longer screw can be used as compared to if there is less spacing between the bearing component and the base component **724**.

**[0101]** The shim component **758** of FIG. **18** can be available in a plurality of sizes. As described above in reference to the shim component **346**, a set of different sized shim components **758** can be provided in a kit to allow for varying levels of adjustment for the provisional tibial prosthesis system **720**. Moreover, the shim component **758** of FIG. **18** can be modified to have a height difference between the anterior and posterior edges and/or the medial and lateral edges, as shown in FIGS. **8** and **10** in reference to the shim components **346**B and **346**D. Shim components having a height difference between the anterior and posterior edges and/or the medial and lateral edges can be included in the kit of different-sized shim components, which can also include different-sized shim components having a uniform height.

**[0102]** The spacer component **726** and the shim component **768** can be used in both left and right tibial prosthesis systems and need not be side-specific.

**[0103]** FIG. **19** illustrates another example of a spacer component **780** that can be used in combination with a tibial prosthesis system. The spacer component **780** can be used with the tibial prosthesis system **340** shown in FIG. **4**B. In an example, the spacer component **780** can be used to provide less spacing compared to the shim component **346**. Similar to the spacer component **726**, the spacer component **780** can be used, in some examples, to provide approximately the same spacing provided between the base component **344** and the bearing component **342**. As similarly described above in reference to the spacer component **726**, the spacer component **780** can be part of the tibial prosthesis system **340** when it is implanted in the knee. Although not visible due to its orientation in FIG. **19**, the spacer component **780** can include one or more handling alignment voids for engaging with a handling instrument.

**[0104]** FIG. **20** illustrates an example of a spacer component **784** that can be similar to the spacer component **726** of FIG. **17** and can also include an extension **786**. A cutout feature **788** can be formed in the extension **786** for accommodating a lockdown screw.

**[0105]** FIG. **21** illustrates the spacer component **784** in a tibial prosthesis system **790**, which can be similar to the tibial prosthesis system **720**. The spacer component **784** can include the extension **786** and, together with an anterior portion of a bearing component, can form a portion of an aperture **792** configured to receive the fastener **728**. In an example, the tibial prosthesis system **790** can be used for smaller size prostheses. As an overall size of the tibial prosthesis gets smaller, less material is available for clamping. The extension **786** can be used to provide additional material for clamping when a lockdown screw in inserted through the tibial prosthesis system **790** and into the aperture **792**.

**[0106]** As described above in the method **500** of FIG. **5**, after a provisional tibial prosthesis has been implanted in a tibia of a patient, testing can be performed to determine if proper knee joint kinematics are present. FIGS. **22-34** illustrate an example of a system for determining force balance on a knee joint during a surgical procedure, and the system can include full- or substantially full-surface sensing to determine knee joint kinematics, including soft tissue balance of the knee joint. The system can include, among other things, a user interface for displaying the sensed data as a two- or three-dimensional representation of an area or volume of the prosthesis, such as an articulation surface area of a tibial prosthesis. The various components of the system can be provided as a kit, as described below in reference to FIG. **29**.

**[0107]** FIG. **22** illustrates an example of a provisional or trial prosthesis system **800** for use in a knee surgery to provide full- or substantially full-surface sensing. The system **800** can be used in combination with a user interface for displaying sensing data. The trial prosthesis system **800** can include one or more of a provisional femoral prosthesis **802**, a provisional tibial prosthesis system **804**, and a handling instrument **806**. The provisional tibial prosthesis system **804** can be similar to the provisional tibial prosthesis systems described above, and can include a bearing component **808**, a shim component **810**, a base component **812**, and a plate component **814**. The base component **812** and/or the plate component **814** are also referred to herein as a bearing support component.

**[0108]** FIGS. **23**A and **23**B respectively illustrate assembled and component views of the bearing component **808**. The bearing component **808** can be similar to the unitary bearing component **342** shown in FIG. **4**B, or can include a plurality of components, such as a top portion **816**, a frame **818**, a sensor plate **820**, and a bottom portion **823**. The sensor plate **820** can include one or both of a plurality of sensors **822** or a processor **824**, which can be disposed on a top surface **826** of the sensor plate **820**. The frame **818** can include a plurality of apertures or openings **828** that can be sized and/or shaped to correspond to the plurality of sensors **822** on the sensor plate **820**, thereby providing for precise force or pressure sensing. The top portion **816** of the bearing component **808** can include an articulating side **830** and a non-articulating side **832**. The bottom portion **823** of the bearing component can be configured to support the sensor plate **820** and can form a bottom non-articulating side **834** of the bearing component **808**.

**[0109]** FIG. **24** illustrates the top surface **826** of the sensor plate **820**, including the sensors **822** and the processor **824**. In an example, the sensor plate **820** can include twenty-four sensors **822**. In other examples, a configuration and quantity of the sensors **822**, as well as the frame **818**, can be different than what is shown in FIG. **23**B. The bearing component **808** can be configured such that there are multiple sensors **822** on the sensor plate **820** and the apertures **828** on the frame **818** can correspond to the sensors **822** in size, shape, or quantity.

**[0110]** The sensors **822** can include any suitable force or pressure sensors or readers, such as, but not limited to, piezoelectric sensors, force sensing resistors, force gauges, strain gauges, load cells, potentiometers, barometers, or the like. Example force sensors include force sensing resistor or capacitive flex circuits, piezoelectric film, piezoelectric ele-

ments, piezoresistive and piezoelectric polymers, metal foil strain gages, semiconductor strain gages, piezoresistive and capacitive pressure sensors, interferometric optical sensors, path displacement optical sensors, optical fiber force sensors, and other suitable sensing technologies.

**[0111]** The sensors **822** can occupy a substantial portion of the top surface **826** of the sensor plate **820** such that the sensors align with a substantial portion of the superior articulating surface of the bearing component **808**, which can be an articulating side **830** of the top portion **816**. The sensor plate **820** can have a medial side M, a lateral side L, an anterior side A, and a posterior side P, all of which can similarly apply to other components of the tibial prosthesis system **804**. By configuring the sensors **822** to be generally spaced over a substantially portion of a surface that is parallel to, and aligned with, the articulating side **830** of the top portion **816**, the sensors **822** can facilitate precise sensing on both the medial M and lateral L sides and/or anterior A and posterior P sides. Similarly, the sensors **822** can facilitate deep posterior sensing, as represented by a medial posterior region **846** and a lateral posterior region **848** in FIG. **24**. Posterior sensing can be beneficial when determining high-flex balance and roll-back, and/or to predict wear, for example. Data gathered from the sensors **822** is described further below in reference to FIGS. **30-34**.

**[0112]** FIG. **25** illustrates the frame **818** and the non-articulating side **832** (or underside) of the top portion **816**. The non-articulating side **832** of the top portion **816** can include a plurality of projections **850**, each of which can be sized and shaped to fit within a corresponding aperture **828** on the frame **818**. Alternatively, the plurality of projections **850** can be separate from, and positioned below, the top portion **816**.

**[0113]** As described above, the apertures **828** on the frame can be configured to correspond and align with the sensors **822**. Thus, in response to a force on the articulating side **830** of the top portion **816**, the projections **850** can be configured to transfer a representative force to one or more sensors **822** aligned with such force. The articulating side **830** of the top portion **816** can include inherent flexibility (e.g., via material properties or thickness) to allow applied forces to be appropriately measured by the aligned sensors **822** and processed for one or more knee joint balance determinations.

**[0114]** The isolated sensing compartments created by distinct projections **850** and distinct apertures **828** of the frame **818** can ensure that only forces applied directly above a particular one or more sensors **822** are measured. The projections **850** can be formed of the same or a different material than other portions of the top portion **816**, and such material can be any material used in surgical procedures and having sufficient strength to sufficiently transfer force. In an example, the projections **850**, or a portion thereof, can be formed of metal.

**[0115]** In an example, the top portion **816** can be formed through injection molding, and the projections **850** can be inserted into cavities of the top portion **816**. The cavities of the top portion **816** can extend in a proximal-to-distal or distal-to-proximal direction and can correspond to a size and shape of the projections **850**. Other designs can be used for the top portion **816** and the projections **850** in addition to what is shown in FIG. **25**. By way of example, the articulating side **830** can be formed from a separate piece attachable to one or more other components used to form the top portion **816**. In an example, the projections **850** can occupy a larger depth of the top portion **816**, defined as a distance between the articulating side **830** and the non-articulating side **832**. Once in place, the projections **850** can extend through a bottom of the top portion **816**.

**[0116]** FIGS. **26**A through **27**C illustrate different components of the provisional tibial prosthesis system **804** in use with a handling instrument **806** shown in FIG. **22**. This use can be similar to the shim handling instrument **354** shown in FIG. **6**A and used with the provisional tibial prosthesis system **340**. FIG. **26**A shows the plate component **814** of the tibial prosthesis system **804** attached to the handling instrument **806**. In an example, the plate component **814** can be attached to the handling instrument **806** using a handling alignment void **852** in an anterior portion of the plate component **814**. FIG. **26**B shows the bearing component **808** attached to the handling instrument **806** using a handling alignment void **854** formed in an anterior portion of the bearing component **808**. The handling instrument **806** can be configured to releasably secure various components of the tibial prosthesis system **804**, as further shown in FIG. **27**A. In an example, the handling instrument **806** can be configured to engage with one handling void in the component it secures. In other examples, the handling instrument **806** can be configured to engage with two handling voids in the component it secures.

**[0117]** In an example, the bearing component **808**, the base component **812**, and the plate component **814** can be assembled together in preparation for implanting the tibial prosthesis system **804** on a tibia, and the handling instrument **806** can be attached to the plate component **814**, as shown in FIG. **22**. The shim component **810** can be included within the tibial prosthesis system **814**, as shown in FIG. **22**, when the other components are implanted, or the shim component **810** can be implanted in a later step.

**[0118]** FIG. **27**A illustrates the shim component **810** attached to the handling instrument **806** with a handling alignment void **856**, and prior to inserting the shim component **810** between the bearing component **808** and the base component **812**. In an example, the shim component **810** can have a thickness T**1**. FIG. **27**B illustrates additional shim components **858**, **860**, **862** and **864** of increasing thicknesses (in a proximal to distal direction). A thickness T**2** of the shim component **858** can be greater than the thickness T**1** of the shim component **810**. Similarly, a thickness T**3** of the shim component **860** can be greater than the thickness T**2** of the shim component **858**. In an example, the shim components **810**, **858**, **860**, **862** and **864** can have a thickness range between 10 mm and 14 mm, inclusive.

**[0119]** As described above in reference to the tibial prosthesis system **340**, a particular shim component can be selected for insertion based on a distance between the bearing component **808** and the base component **812** implanted on a tibia. Also, as described above in reference to the method **500** of FIG. **5**, a chosen shim component, selected from the shim components **810**, **858**, **860**, **862** and **864**, can be inserted and then testing can be performed to determine if a different shim component should be selected to replace an initially selected shim component. In an example, testing can be performed to analyze a force or pressure balance on at least a portion of the knee joint using the sensors **822** of the bearing component **808**. If the force or pressure data collected is not satisfactory, a different shim component can be inserted. These steps can be repeated until satisfactory force or pressure data is observed. Optionally, in conjunction with or in lieu of shim selection, a surgeon can adjust ligament balance through liga-

ment release if testing balance data is not satisfactory. The bearing component **808**, which includes the sensors **822** and the frame **818**, can be configured for providing a comprehensive set of sensing data about a force balance on a knee joint.

**[0120]** FIG. **27**C illustrates a shim component **866** having a thickness T**6**. In an example, the thickness T**6** of the shim component **866** can be less than the thickness T**1** of the shim component **810**. In an example, the thickness T**6** of the shim component **866** can be about 6 mm. In other examples, the thickness T**6** can be less than or greater than 6 mm. In an example, the shim component **866** can be used in combination with one of the shim components **810**, **858**, **860**, **862** and **864** to provide additional spacing between the bearing component **808** and the base component **812**. As shown in FIG. **27**C, the shim component **866** can include an aperture **868** for engaging with the handling instrument **806** and can be configured for insertion between a shim component and the bearing component **808**.

**[0121]** The components of the trial prosthesis system **800** can be available in varying sizes to accommodate different size knee joints. In an example, a surgeon or other caregiver can determine an approximate suitable size or shape of the trial prosthesis system **800** using a template. FIG. **28** illustrates a plurality of templates **880** that can be sized and/or shaped for use in determining a proper tibial tray size prior to selecting a suitable size or shape of the tibial prosthesis system **804**. The templates **880** can range in size from a smallest size A to a largest size F, as shown.

**[0122]** FIG. **29** illustrates an example of a kit **900** that can include a user interface **902**, a handling instrument **904**, and a plurality of components **906** that can include some or all of the components described above for the trial prosthesis system **800**, or related variants of such components also described above. The user interface can be configured to be connected to the sensors **822** and the processor **824** of the bearing component **808** of the tibial prosthesis system **804**. The user interface **902** can include a computing device configured to process data from the sensors **822** or the processor **824**, compare such data to a historical database, and display one or more balance determinations on a screen of the user interface. The user interface **902** can be configured to be small and portable, as well as wireless, such that the user interface **902** can be used in an area, or surrounding area, of a surgical procedure. In some examples, the user interface **902** can be connected to another display device such as, for example, a computer or TV monitor in the area of the surgical procedure.

**[0123]** In an example, the kit **900** can include all components for the trial prosthesis system **800**, including the provisional femoral prosthesis **802** and a plurality of shim components, as described above in reference to FIG. **27**B. In an example, the kit **900** can include at least one shim component having a height difference between the anterior and posterior edges and/or the medial and lateral edges. The kit **900** can be designed such that the user can have some or all of the components for the knee procedure located together. The components of the kit **900** can be housed inside a tray **907** that, together with one or more of the components that it houses, can be disposable after a single use. In an example, the kit **900** can include some of the components of the trial prosthesis system **800** and some of the other components can be provided separately during the surgical procedure.

**[0124]** FIG. **30** illustrates an example of a digital image **908** that can be generated and displayed on the user interface **902**. As described above, the bearing component **808** of the tibial prosthesis system **804** can include the sensor plate **820** having the plurality of sensors **822**. In an example, the sensor plate **820** can have a twenty-four sensor configuration. The sensor plate **820** can include the processor **824**, which can be configured to receive and process data from the plurality of sensors **822** before communicating the data to the user interface **902**. The processor **824** can alternatively be integrated with the computing device of the user interface **902**. The user interface **902** can have a wired or wireless connection with the sensor plate **820**. The wired or wireless connection can utilize any type of network, such as the Internet, a telephone network, a cable network, or a wireless network.

**[0125]** The digital image **908** can be a two-dimensional (shown), or optionally three-dimensional, representation of the area of the tibial prosthesis **800** that is aligned with the sensors **822**. The data from the sensors **822** can be mapped into a multi-point data registry. In an example, a 24-point data registry is mapped based on having twenty-four sensors **822**. In other examples, the data registry can have more or less than twenty-four points based on having more or less than twenty-four sensors **822** on the sensor plate **820**. As described above, a configuration and design of the bearing component **808**, including the frame **818** having the openings **828** aligned with the sensors **822**, can allow for independent sensing areas that can be noticeably mapped and presented on the user interface **902**.

**[0126]** FIG. **31** illustrates an example of a digital image **910** that can be displayed on the user interface **902**. The digital image **912** can show a force value generated by each of the sensors **822** on the sensor plate **820**. The force value generated can be the result of force transmitted by the projections **850** of the top portion **816**, or alternatively, columns extending between the top portion **816** and the bottom portion **823**, which interact with the sensors **822**. Based on the data shown in the digital image **912**, the computing device of the user interface **902** can generate an image **914**, which can include a collective force in each of two halves or four quadrants on the provisional tibial prosthesis system **804**. The image **914** can include indicators representing medial M, lateral L, anterior A, and posterior P sides, or combinations thereof, of the provisional tibial prosthesis system. An image **916** showing medial-lateral and anterior-posterior center of force data can also be generated by the user interface **902**.

**[0127]** FIG. **32** illustrates an example of another digital image **918** that can be displayed on the user interface **902**. The surgeon or other user can select a particular zone, which can be conceptualized as a green or safe zone, representing acceptable force limits in flexion and/or extension. In flexion, the green zone can be represented by limit points **920** and **922**, for example, and in extension, the green zone can be represented by limit points **924** and **926**, for example. Optionally, the green zone can be established based, at least in part, on statistically relevant historical data from one or more patient trials. For example, upon the collection of a number of trials of empirical data, data may be statistically analyzed (either by the analysis program, or another external program) to form suggested pre-determined pressure criteria, i.e., upper and lower limits, to aid the surgeon in recognizing potential elevated pressure readings. The suggested pre-determined pressure criteria can define statistically sound thresholds and allowable limits under certain conditions, and can be constantly adjusted as more information becomes available in the database.

**[0128]** Forces values generated by, and acquired from, the sensors **822** can then be mapped and shown in image **928** of FIG. **33**, for example. The image **928** can indicate forces or force zones (e.g., medial zone, lateral zone, anterior zone, posterior zone, medial/anterior zone, medial/posterior zone, lateral/anterior zone, or lateral/posterior zone) that are too high (labeled as **930**) relative to the green zone, within the acceptable green zone (labeled as **931**), and that are too low (labeled as **932**) relative to the green zone. The computing device of the user interface can be configured to compare the acquired force data to green zone data, the latter of which can be stored in software on the user interface's hard drive. FIG. **34** illustrates the user interface **902** with multiple images based on the green zone selected by the surgeon. One or more images can be used by the surgeon, for example, to correct excessive forces or force zones.

**[0129]** In other examples, additional or alternative data can be displayed to guide the surgeon. The numbers presented as force values in FIGS. **31-34** are exemplary to show the type of data that can be generated and displayed for use by the surgeon. The particular numbers represented are not intended to be limiting, but rather, an example for determining balance or imbalance of the knee joint. The force numbers generated by the sensors and mapped into the data point registry can be compared to previously gathered numbers over time that can be indicative of adequate to inadequate balance and alignment.

**[0130]** In an example, as described above, the user interface **902** can be configured to include a computing device and the user interface **902** can be provided as part of the kit **900**. In other examples, the sensors **822** and the processor **824** can be connected to any other type of computing device to generate the types of data described above, based on the data from the sensors **822**.

**[0131]** Closing Notes:

**[0132]** Existing provisional systems, kits, and methods fail to provide a surgeon with insight of knee joint kinematics if an angled bone cut (e.g., a bone cut that is not parallel to a joint line of a knee) is made to a distal end of a femur or a proximal end of a tibia. Existing provisional systems, kits, and methods further require the stacking of a relatively high number of provisional components to arrive at an appropriate configuration of a permanent tibial prosthesis system or fail to provide sensed force or pressure data providing a real-time indication of provisional knee joint balance. Advantageously, the present provisional systems, kits, and methods can include a shim component, having one or both of a medial edge height that is different than a lateral edge height or an anterior edge height that is different than a posterior edge height, or a sensor coupled to or integrated with a bearing component, a bearing support component, or the shim component. Such a shim component configuration can provide the surgeon with knee joint kinematic insight regarding an angled bone cut to the femur or tibia before the cut is made and can reduce the number of provisional components needed during surgery sizing. The sensor can facilitate real-time knee joint balancing testing.

**[0133]** The above Detailed Description includes references to the accompanying drawings, which form a part of the Detailed Description. The drawings show, by way of illustration, specific embodiments in which the present tibial prosthesis systems, kits, and methods can be practiced. These embodiments are also referred to herein as "examples." While certain examples are shown and described with respect to a left knee or a right knee, it is to be appreciated that the present disclosure is equally applicable to both the left and right knees. All examples can also be used in partial or total knee replacement procedures.

**[0134]** The above Detailed Description is intended to be illustrative, and not restrictive. For example, the above-described examples (or one or more elements thereof) can be used in combination with each other. Other embodiments can be used, such as by one of ordinary skill in the art upon reviewing the above description. Also, various features or elements can be grouped together to streamline the disclosure. This should not be interpreted as intending that an unclaimed disclosed feature is essential to any claim. Rather, inventive subject matter can lie in less than all features of a particular disclosed embodiment. Thus, the following claims are hereby incorporated into the Detailed Description, with each claim standing on its own as a separate embodiment. The scope of the invention should be determined with reference to the appended claims, along with the full scope of equivalents to which such claims are entitled.

**[0135]** In the event of inconsistent usages between this document and any document so incorporated by reference, the usage in this document controls.

**[0136]** In this document, the terms "a" or "an" are used to include one or more than one, independent of any other instances or usages of "at least one" or "one or more." In this document, the term "or" is used to refer to a nonexclusive or, such that "A or B" includes "A but not B," "B but not A," and "A and B," unless otherwise indicated. In this document, "anterior" refers to a direction generally toward the front of a patient, "posterior" refers to a direction generally toward the back of the patient, "medial" refers to a direction generally toward the middle of the patient, and "lateral" refers to a direction generally toward the side of the patient. In this document, the phrase "anterior/posterior direction" is used to include an anterior to posterior direction or a posterior to anterior direction.

**[0137]** In the appended claims, the terms "including" and "in which" are used as the plain-English equivalents of the respective terms "comprising" and "wherein." The terms "including" and "comprising" are open-ended, that is, a system, kit, or method that includes elements in addition to those listed after such a term in a claim are still deemed to fall within the scope of that claim. Also, in the following claims, the "kit" claims are intended to provide protection for, among other things, a set novel shim components, at least one of which includes differing heights, and sensor, bearing support, and handling instrument components having a functional relationship with the novel shim components. Moreover, in the following claims, the terms "first," "second," and "third," etc. are used merely as labels, and are not intended to impose numerical requirements on their objects.

**[0138]** The Abstract is provided to allow the reader to quickly ascertain the nature of the technical disclosure. It is submitted with the understanding that it will not be used to interpret or limit the scope or meaning of the claims.

What is claimed is:

**1**. A method, comprising:

inserting a first tibial shim component, including one or both of a medial edge having a different height than a lateral edge or an anterior edge having a different height than a posterior edge, between a tibial bearing component and a tibial base component or a tibial plate component in an anterior/posterior direction;

testing one or more of a stability, a force balance, or a range of motion of a knee joint in which the first tibial shim component is inserted; and

when the testing result is not satisfactory,

removing the first tibial shim component; and

inserting a second tibial shim component, including at least one of a medial edge, a lateral edge, an anterior edge, or a posterior edge having a different height than the first tibial shim component, between the tibial bearing component and the tibial base or tibial plate component in the anterior/posterior direction.

**2**. The method of claim **1**, further comprising:

testing one or more of the stability, the force balance, or the range of motion of the knee joint with the second tibial shim component positioned between the tibial bearing component and the tibial base or plate component.

**3**. The method of claim **1**, wherein the tibial bearing component and the tibial base component are coupled to each other, and wherein removing the first tibial shim component includes preserving a coupling arrangement between the tibial bearing component and the tibial base component.

**4**. The method of claim **1**, wherein removing the first tibial shim component includes attaching a shim handling instrument with a front end portion of the first tibial shim component.

**5**. The method of claim **4**, wherein inserting the second tibial shim component includes attaching the shim handling instrument with a front end portion of the second tibial shim component.

**6**. The method of claim **1**, wherein testing one or more of the stability, the force balancing, or the range of motion of the knee joint includes sensing at least one of a pressure, force, or position of the knee joint using one or more sensors.

**7**. The method of claim **1**, wherein testing one or more of the stability, the force balancing, or the range of motion of the knee joint includes sensing at least one of a pressure, force, or position of the knee joint using a plurality of sensors coupled to or integrated with the bearing component.

**8**. The method of claim **7**, wherein using the plurality of sensors coupled to or integrated with the bearing component includes allowing a plurality of forces or pressures to be communicated through a plurality of apertures included in a bearing component frame and sensed by the plurality of sensors, and wherein the sensors are positioned distally of the frame, having a size or shape corresponding to a size or shape of the apertures.

**9**. The method of claim **1**, further comprising:

removing the first or second tibial shim component and, prior to implanting a permanent tibial implant system, cutting an angled surface, corresponding to a proximal/distal height profile of the removed shim, on a proximal end portion of a tibia or a distal end portion of a femur.

**10**. A method of performing a surgical procedure on a portion of a knee joint, the method comprising:

implanting a prosthesis on a tibia, including implanting, in a distal to proximal direction, a base component, a plurality of bearing component sensors, a bearing component frame having a plurality of apertures corresponding in a size or shape to the sensors, and a bearing component top portion having a superior articulating surface;

inserting a first tibial shim component between the plurality of bearing component sensors and the base component in an anterior/posterior direction;

testing a force balance on at least a portion of the knee joint using the plurality of bearing component sensors;

when the force balance is not satisfactory,

removing the first tibial shim component; and

inserting a second tibial shim component between the plurality of bearing component sensors and the base component in the anterior/posterior direction.

**11**. The method of claim **10**, further comprising:

selecting the first and second tibial shim components from a set of different-sized tibial shim components, at least one of the tibial shim components including one or both of a medial edge having a different height than a lateral edge or an anterior edge having a different height than a posterior edge.

**12**. The method of claim **10**, further comprising:

re-testing the force balance on at least a portion of the knee joint after inserting the second tibial shim component.

**13**. The method of claim **12**, further comprising:

repeating the steps of removing a tibial shim component, inserting a different tibial shim component, and testing the force balance on a least a portion of the knee joint, until the force balance is indicative of balance on at least a portion of the knee joint.

**14**. The method of claim **10**, wherein the plurality of bearing component sensors is positioned on a plate disposed between the bearing component frame and a bearing component bottom portion, and wherein the sensors occupy a substantial portion of the plate such that the sensors align with a substantial portion of the superior articulating surface of the bearing component top portion.

**15**. The method of claim **10**, wherein implanting the prosthesis on the tibia includes implanting a spacer between the plurality of bearing component sensors and the base component; and the method further comprising removing the spacer from the prosthesis prior to inserting the first tibial shim component between the plurality of bearing component sensors and the base component.

**16**. The method of claim **10**, further comprising:

inserting a third tibial shim component between the plurality of bearing component sensors and the base component such that the second and third tibial shim components occupy a space between the plurality of bearing component sensors and the base component.

**17**. A method of determining force balance of a knee joint, the method comprising:

implanting a prosthesis on a tibia, including implanting, in a distal to proximal direction, a base component, a plurality of bearing component sensors, a bearing component frame having a plurality of apertures corresponding in a size or shape to the sensors, and a bearing component top portion;

analyzing a first set of force or pressure data from the plurality of bearing component sensors;

when the first set of force or pressure data is not satisfactory,

inserting a first tibial shim component between the plurality of bearing component sensors and the base component in an anterior/posterior direction; and

analyzing a second set of force or pressure data from the plurality of bearing component sensors.

**18**. The method of claim **17**, wherein implanting the prosthesis on the tibia includes implanting a spacer between the plurality of bearing component sensors and the base component; further comprising removing the spacer from the prosthesis prior to inserting the first tibial shim component between the plurality of bearing component sensors and the base component.

**19**. The method of claim **17**, further comprising:

when the second set of force or pressure data is not satisfactory,

removing the first tibial shim component;

inserting a second tibial shim component between the plurality of bearing component sensors and the base component in the anterior/posterior direction; and

analyzing a third set of force or pressure data from the plurality of bearing component sensors.

**20**. The method of claim **19**, further comprising:

repeating the steps of removing, inserting and analyzing until the force or pressure data is indicative of balance of the knee joint.

**21**. The method of claim **19**, further comprising:

inserting a third tibial shim component such that the second and third tibial shim components occupy a space between the plurality of bearing component sensors and the base component.

**22**. The method of claim **17**, wherein at least one of analyzing the first set of force or pressure data and analyzing the second set of force or pressure data is performed by a computing device that receives the force data from the plurality of bearing component sensors.

**23**. The method of claim **17**, further comprising:

displaying at least one of the first and second sets of force or pressure data through a user interface having a representation of an area of the prosthesis.

**24**. The method of claim **17**, further comprising:

selecting the first and second tibial shim components from a set of different sized tibial shim components, at least one of the tibial shim components including one or both of a medial edge having a different height than a lateral edge or an anterior edge having a different height than a posterior edge.

* * * * *