Jan. 13, 1959 W. RIECKMAN 2,868,553

COMBINATION ICE AND ROLLER SKATES

Filed March 14, 1957 2 Sheets-Sheet 1

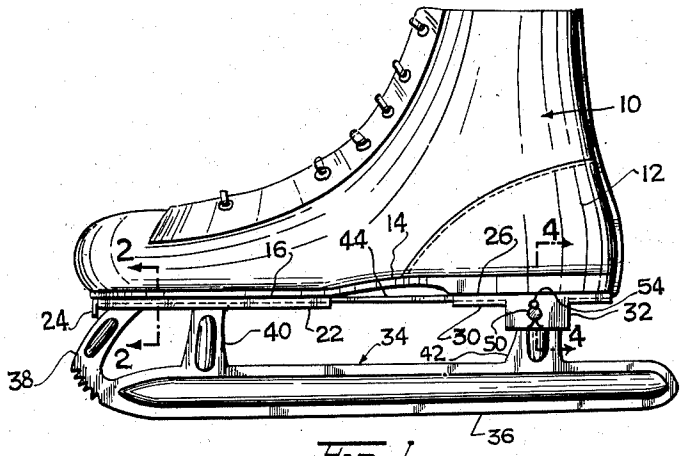

Fig. 1.

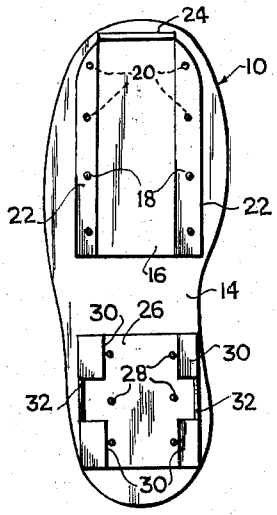

Fig. 5.

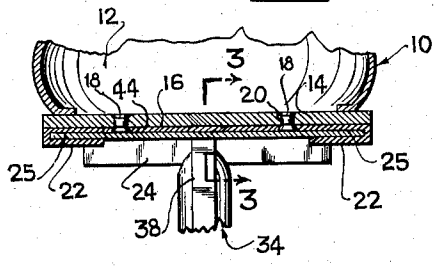

Fig. 2.

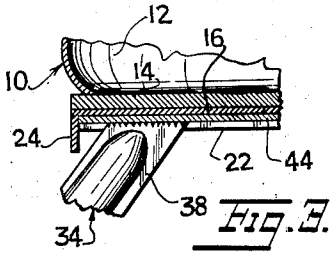

Fig. 3.

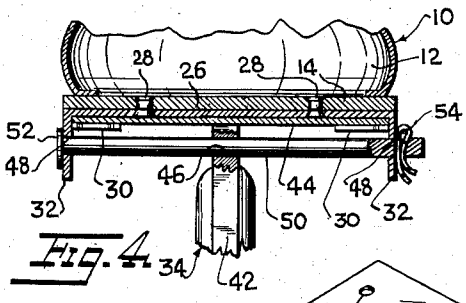

Fig. 4.

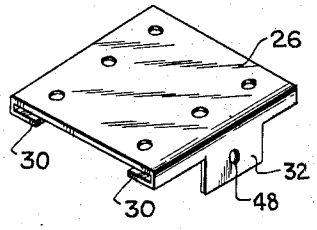

Fig. 6.

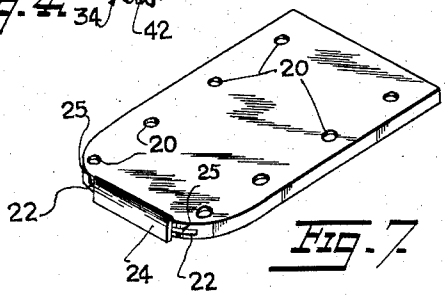

Fig. 7.

INVENTOR.
WERNER RIECKMAN
BY
ATTORNEY

Jan. 13, 1959 W. RIECKMAN 2,868,553

COMBINATION ICE AND ROLLER SKATES

Filed March 14, 1957 2 Sheets-Sheet 2

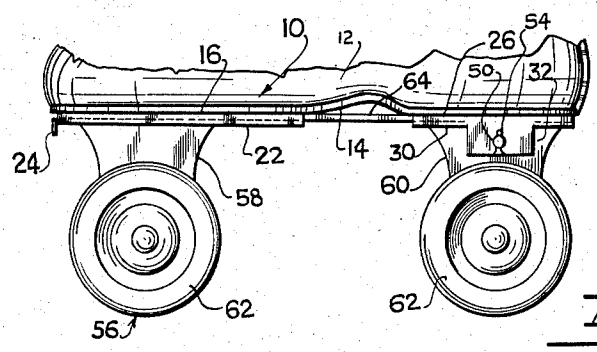

Fig. 8.

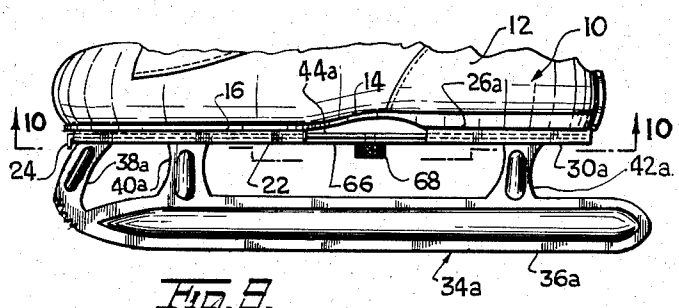

Fig. 9.

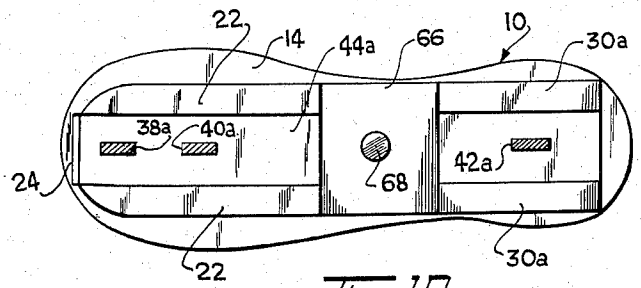

Fig. 10.

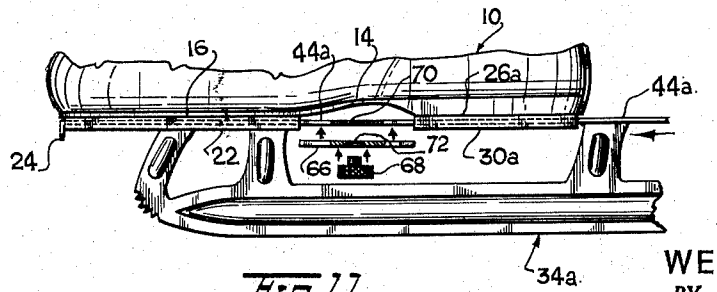

Fig. 11.

INVENTOR.
WERNER RIECKMAN
BY Zoltan H. Polachek
ATTORNEY

United States Patent Office 2,868,553 Patented Jan. 13, 1959

2,868,553

COMBINATION ICE AND ROLLER SKATES

Werner Rieckman, Mattituck, N. Y.

Application March 14, 1957, Serial No. 646,101

1 Claim. (Cl. 280—7.13)

This invention relates to convertible skates, that is, combination ice and roller skates so designed as to permit selective interchange of roller skate and ice skate attachments, in an arrangement such that either of these attachments can be connected to a shoe.

Ice skates of modern design are so constructed that the blades thereof are permanently attached to shoes. Further, many roller skates are manufactured in the same manner.

It will be seen that this arrangement, when one derives pleasure both from ice skating and roller skating, proves rather expensive, in view of the necessity of purchasing both of these articles. Accordingly, the broad object of the present invention is to provide a generally improved item of sports equipment, that will reduce the cost ordinarily involved in purchasing ice skates, and roller skates separately.

To this end, the invention, summarized briefly, comprises a single pair of shoes having means on the underside thereof designed to receive either an ice skate or roller skate attachment. The invention includes locking devices designed to fixedly connect the selected attachment with the shoe, said attachment in one form of the invention comprising a transversely extending pin or shaft lockably engageable with both the attachment and the shoe. In another form of the invention, the locking means comprises a flat plate connectible to the blade or roller skate attachment in such a position as to interengage the attachment-receiving means of the shoe, to hold the shoe and the attachment against relative movement.

One object of importance is to provide a device of the character stated that will be particularly characterized by its relatively low cost, while at the same time being rugged, durable, and relatively simple in construction.

Another object is to so form the device that the attachment or detachment of the blade or roller means can be effected with maximum facility, and without requirement of special tools.

Still another object is to so form the attachment as to permit any of various roller and ice skates to be connected to the shoe, as for example, both indoor and outdoor roller skates, roller skates of the racing type, racing type ice skates, hockey skates, figure skates, etc. By permitting any of these various types of roller and ice skates to be connected to a single pair of shoes, manufacturing costs are reduced measurably, and the purchaser can selectively buy any particular type of ice skate and roller skate combination, or for that matter, a full or partial set of ice and roller skates, as desired.

Still another object is to so form the device that when the ice or roller skate attachment is connected to the shoe, there will be no interference with proper skating movements, and no tendency of the attachment to become loosened or wholly separated from the shoe.

For further comprehension of the invention, and of the objects and advantages thereof, reference will be had to the following description and accompanying drawings,

and to the appended claims in which the various novel features of the invention are more particularly set forth.

In the accompanying drawings forming a material part of this disclosure:

Fig. 1 is a side elevational view of a device according to the present invention, in which an ice skate attachment has been connected to the shoe, ready for use.

Fig. 2 is an enlarged transverse sectional view through the toe portion of the device, substantially on line 2—2 of Fig. 1.

Fig. 3 is a fragmentary, longitudinal sectional view through the toe portion, substantially on line 3—3 of Fig. 2, on the same scale as Fig. 2.

Fig. 4 is a transverse sectional view through the heel portion, substantially on line 4—4 of Fig. 1.

Fig. 5 is a bottom plan view of the shoe with the attachment removed.

Fig. 6 is an enlarged perspective view of the rear support plate of the device, shown per se.

Fig. 7 is a perspective view of the front support plate on an enlarged scale, shown per se.

Fig. 8 is a fragmentary side elevational view of the device with a roller skate attachment substituted for the ice skate attachment.

Fig. 9 is a view similar to Fig. 8 in which the ice skate attachment has been connected to the shoe by a modified type of locking device.

Fig. 10 is a sectional view substantially on line 10—10 of Fig. 9.

Fig. 11 is a view similar to Fig. 9 showing the attachment at an intermediate step of connecting the same to the shoe, the locking means being illustrated in exploded relation to the remaining components of the device, portions being broken away and other portions being shown in section.

A single pair of shoes is used with both the ice and roller skate attachments. The shoe, generally designated 10, includes a reinforced upper 12, connected to a sole 14.

A rectangular front support or connecting plate 16, formed from a single piece of rigid, metal material, is permanently and fixedly attached to the underside of the toe portion of sole 14, by means of rivets 18 or their equivalents, uniformly spaced along the longitudinal median of the sole. The rivets pass through correspondingly spaced openings 20 of plate 16 (see Fig. 7).

The dimensions of the plate 16, and also of the other components to be described hereinafter, will of course be varied according to the size of the particular shoe on which the device is to be mounted, that is, a smaller plate 16 might be used for children's shoes, with a larger one being used for adults' shoes. In any event, integrally formed upon the opposite longitudinal edges of the plate 16 are downwardly and inwardly turned guide flanges 22, said flanges being comparatively wide as shown in Figs. 2 and 5 and extending the full length of plate 16. At the forward extremity of plate 16, there is integrally formed thereon a depending, transversely extending abutment flange 24, which partially closes the front ends of the confronting guide grooves 25 defined by the flanges 22.

A rear connecting plate 26 is connected by rivets 28 to the underside of the heel portion of sole 14, and is aligned longitudinally with the front connecting plate 16 (Fig. 5). Integrally formed upon opposite longitudinal edges of plate 26 (see Fig. 6) are guide flanges 30 corresponding to and aligned with flanges 22. Intermediate its ends, plate 26 is integral at opposite sides thereof with depending, flat ears 32, said ears being for the purpose of receiving a locking means, to be described hereinafter. The ears interrupt the continuity of the guide flanges 30 along each side of the plate 26, as shown in Fig. 5, but do not interfere with the adaptability of the flanges 30

for slidably receiving an ice skate attachment generally designated 34.

The ice skate attachment includes a blade 36, integral at its forward end with a front leg 38. An intermediate leg 40 and a rear leg 42 also extend upwardly from and are integral with blade 36, the several legs being welded or otherwise fixedly secured at their upper ends to the underside of an elongated, rectangular, planiform attachment plate 44.

It will be readily seen that in attaching the ice skate attachment 34 to the shoe, one shifts the attachment 34 from the right in Fig. 1, guiding the forward extremity of the plate 44 into the rear ends of the guide flanges 30. Then, the attachment 34 is moved to the left in Fig. 1, with the side portions of the plate 44 sliding in the flanges 30 and ultimately engaging and sliding in the flanges 22. Eventually, the front end of the plate 44 will abut the stop or abutment plate 24, in the relative position of the components shown in Fig. 1.

Referring now to Fig. 4, to lock the shoe and the attachment against relative movement, there is provided an opening 46 in leg 42. Opening 46 is transversely aligned in the use position of the parts with openings 48 formed in ears 32, to receive a lock pin 50 inserted from the left in Fig. 4 and having a head 52 engageable with one ear 32. The other end of pin 50 projects beyond the opposite ear 32, and has an opening adapted to receive a cotter pin 54 which bears against said other ear 32.

It will be seen that in this way, the skate attachment 34 is releasably but fixedly interlocked with the connecting means 16, 26 of shoe 10.

As previously noted, the skate attachment 34 can be of any desired type, and could be so designed as to provide a racing type ice skate, figure skate, hockey skate, etc. Any of these types could be purchased by a user for attachment to the shoe 10, and in no event is it necessary to modify the shoe 10 or the attaching means 16, 26 carried thereby to receive a particular type of ice skate attachment 34.

Referring now to Fig. 8, there is here shown a roller skate attachment generally designated 56, usable interchangeably with the ice skate attachment 34. Again, the roller skates could be of any desired type, and could be indoor or outdoor roller skates, racing skates, etc. Thus, the roller skate attachment has the front and rear wheel hangers 58, 60 carrying wheels or rollers 62. The hangers are fixedly secured to the underside of an attachment plate 64 identical to the plate 44, with the roller skate attachment being connectible to and disconnectible from the connecting means 16, 26 of shoe 10 in the same manner as the ice skate attachment 34.

In Figs. 9–11, a modified type of locking means is used in place of the locking shaft or pin 50. Otherwise, the construction is identical to that of the first form of the invention.

Thus, secured to the shoe 10 is a connecting plate 16 identical in all respects to the plate 16 of the first form of the invention. A rear connecting plate 26ª is identical in all respects to plate 26, except for omission of the ears 32, thus providing continuous guide flanges 30ª along opposite sides of plate 26ª.

In Figs. 9–11, an ice skate attachment 34ª has been shown connected to the shoe 10. However, it will be understood that the modified locking means is of course usable with equal facility with a roller skate attachment such as shown in Fig. 8.

In any event, in this form of the invention, the ice skate attachment 34ª has a blade 36ª, and legs 38ª, 40ª, and 42ª secured to the underside of the attachment plate 44ª.

A lock plate 66 (see Fig. 11) is of rectangular outer configuration, as best shown in Fig. 10. In width, the lock plate is equal to the width of the plates 16, 26ª. With respect to its front-to-back dimension, lock plate

66 is equal to the distance between said plates 16, 26ª.

A locking screw 68 has a knurled head, and formed in the locking plate 66 and in the attachment plate 44ª are registering openings 72, 70, respectively. Opening 70 is threaded, while opening 72 is smooth-walled.

The attachment 34ª is slid into place in the same manner as in the first form of the invention. This will be noted from Fig. 11, in which the attachment 34ª is shown partly moved into its operative position.

When the attachment 34ª abuts the stop flange 24, the locking plate 66 is merely positioned against the underside of the plate 44ª, abutting at its forward and leading edges against the guide flanges 22, 30ª, respectively. The openings 70, 72 will be in registration at this time and screw 68 is extended upwardly through opening 72 and threadedly engaged in opening 70. This fixedly connects the plate 66 to the plate 44ª, and it will be readily observed that the plate 66 will now constitute an abutment engaging both the plates 16 and 26ª, to prevent relative movement of the attachment 34ª and the shoe to which it is secured.

To disconnect the attachment, it is merely necessary to back the screw 68 out of the opening 70.

In both forms of the invention, the device is characterized by the ease with which conversion is effected between ice and roller skates. Further, the construction has the desirable quality of simplicity, while still assuring a swift connection of the attachment to the shoe, or the equally swift disconnection of the attachment from the shoe. Still further, the locking and unlocking of the attachment is effected with speed and ease, and when the attachment is locked in place, it will be securely held against movement either in a forward or rearward direction, or in a lateral direction.

While I have illustrated and described the preferred embodiments of my invention, it is to be understood that I do not limit myself to the precise constructions herein disclosed and that various changes and modifications may be made within the scope of the invention as defined in the appended claim.

Having thus described my invention, what I claim as new, and desire to secure by United States Letters Patent is:

A skate construction comprising support means attachable to the foot of a user, a skate attachment removably connectible with the support means, and interlocking means releasably interengaging the support means and skate attachment against relative movement in the connected relationship thereof, said supporting means including a shoe and spaced support plates fixedly connected to the sole of the shoe, the forward supporting plate extending to the front of the shoe, the skate attachment including an elongated attaching plate extending substantially the length of the attachment and being interengageable with the spaced plates of the support means and a supporting-surface-engaging means depending from the attaching plate, said spaced plates of the support means being formed with longitudinally extending, confronting guide flanges slidably receiving the opposite longitudinal portions of the attaching plate to effect the engagement of the attaching plate with said spaced plates, said plates of the support means being spaced apart longitudinally of the shoe, the forward one of the spaced plates including at its front extremity an abutment flange engaging the attaching plate on the sliding of the attaching plate to a use position, to limit movement of the attaching plate beyond said use position, said spaced plates including guide flanges on the underside thereof in confronting relation, the attaching plate being slidably engageable with the guide flanges, the attaching plate having an opening, said interlocking means comprising a locking plate having an opening registering with that of the attaching plate and abutting the respective guide flanges in the space between said plates of the support means, said lock means further including a screw

engageable in the registering openings of the locking plate and attaching plate to removably, fixedly connect the locking plate to the attaching plate.

References Cited in the file of this patent

UNITED STATES PATENTS

1,243,077 Kuchtik ---------- Oct. 16, 1917
1,773,303 Duff ---------- Aug. 19, 1930
1,844,025 Bachand ---------- Feb. 9, 1932
2,118,892 Mays ---------- May 31, 1938
2,209,116 Friedmann ---------- July 23, 1940
2,664,294 Kleinman ---------- Dec. 29, 1953
2,706,119 Uphoff ---------- Apr. 12, 1955